Oversight / NHS	
FHWA REGION VIII OVERSIGHT?	□ NO ■ YES
NATIONAL HIGHWAY SYSTEM?	□ NO ■ YES

DEPARTMENT OF TRANSPORTATION
STATE OF COLORADO

HIGHWAY CONSTRUCTION BID PLANS OF PROPOSED
FEDERAL AID PROJECT NO. IM 0254-394
INTERSTATE HIGHWAY 25 / SANTA FE DRIVE
DENVER COUNTY
CONSTRUCTION PROJECT CODE NO. 16311

Related Projects:	
P. E. UNDER PROJECT: Project Number	IM 0254-394
Project Code:	16311
R.O.W. Projects: R.O.W. Project Description	
XXXXXXXXXXXXXXX	

TABULATION OF LENGTH & DESIGN DATA

SEE SHEETS DD-1 & DD-2 FOR TABULATION OF LENGTH & DESIGN DATA

PROJECT LOCATION

LATITUDE = 104°59'56" W

LONGITUDE = 39°42'40" N

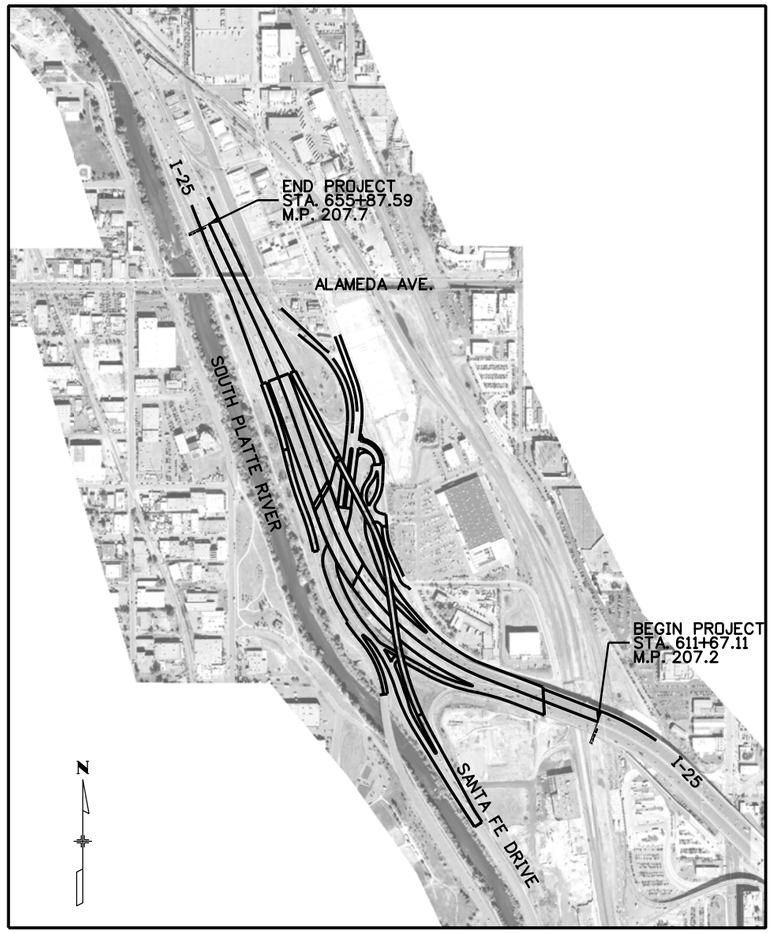

PROJECT LOCATION MAP

0 1000' 2000'

INDEX OF SHEETS

SHEET NO.	DWG. NO.	DESCRIPTION
1	1	TITLE SHEET
2-3	DD-I TO DD-2	TABULATION OF LENGTH AND DESIGN DATA
4	SP-1	STANDARD PLANS LIST
5-6	GN-1 TO GN-2	GENERAL NOTES
7	SU-1	SURVEY TABULATION
8-13	1 TO 6	SURVEY CONTROL DIAGRAM SHEETS
14-31	TY-1 TO TY-18	TYPICAL SECTIONS
32-34	SET-1 TO SET-3	SUPER ELEVATION TABLES
35-44	GM-1 TO GM-10	GEOMETRIC PLANS
45-48	TB-1 TO TB-4	ROADWAY REMOVAL, PAVEMENT & EARTHWORK TABS
49-54	RM-1 TO RM-6	ROADWAY REMOVAL PLANS
55-64	EP-1 TO EP-10	ENVIRONMENTAL PLANS
65	LM1	STRUCTURE LOCATION MAP
66-95	B1 TO B30	I-25 OVER SANTA FE BRIDGE PLANS
96-180	BR1 TO BR85	RAMP 1 BRIDGE PLANS
181	BT1	TEMPORARY BRIDGE PLANS
182	BS1	TEMPORARY SUPPORT PLANS
183-244	W1 TO W62	WALL PLANS
245	RN-1	ROADWAY NOTES
246-249	IPL-1 TO IPL-4	I-25 PLANS
250-252	R1PL-1 TO R1PL-3	RAMP 1 PLANS
253-254	R2PL-1 TO R2PL-2	RAMP 2 PLANS
255-256	R3PL-1 TO R3PL-2	RAMP 3 PLANS
257-258	R4PL-1 TO R4PL-2	RAMP 4 PLANS
259-262	SFPL-1 TO SFPL-4	SANTA FE PLANS
263	INT-1	SANTA FE/RAMP 3/RAMP 4 INTERSECTION PLAN
264	HPL-1	HOME DEPOT ACCESS PLAN
265-266	FRPL-1 TO FRPL-2	I-25 FRONTAGE ROAD PLAN
267-273	IPR-1 TO IPR-7	I-25 PROFILES
274-276	R1PR-1 TO R1PR-3	RAMP 1 PROFILES
277-278	R2PR-1 TO R2PR-2	RAMP 2 PROFILES
279	R3PR-1	RAMP 3 PROFILES
280	R4PR-1	RAMP 4 PROFILES
281-284	SFPR-1 TO SFPR-4	SANTA FE PROFILES
285	HPR-1	HOME DEPOT ACCESS PROFILE
286-288	CJP-1 TO CJP-3	CONCRETE JOINT PAVING PLANS
289	TE-1	SUMMARY OF TRAFFIC ENGINEERING ITEMS
290-296	ST-1 TO ST-7	TRAFFIC SIGNING TABULATION
297	PMT-1	PAVEMENT MARKING TABULATION
298-303	S-1 TO S-6	GUIDE SIGN CROSS SECTIONS
304-310	SL-1 TO SL-7	GUIDE SIGN LAYOUTS
311-315	GS-1 TO GS-5	GUIDE SIGN PLANS
316-326	SS-1 TO SS-11	SIGNING & STRIPING PLANS
327	TS-1	TABULATION OF TRAFFIC SIGNAL & ITS ITEMS
328-331	TS-2 TO TS-5	INTERIM TRAFFIC SIGNAL & ITS PLAN
332-349	ST-1 TO ST-18	CONSTRUCTION PHASING PLANS
350	TD-1	TABULATION OF PHASING ITEMS
351-358	ST-19 TO ST-26	CONSTRUCTION PHASING TYPICAL SECTIONS
359-362	SW-1 TO SW-4	SWMP CONSTRUCTION PLANS
363-369	EI-1 TO EI-7	INITIAL GRADING PLANS
370-376	EN-1 TO EN-7	INTERIM GRADING PLANS
377-383	EF-1 TO EF-7	FINAL GRADING PLANS
384-416	1 TO 33	DRAINAGE PLANS
417-420	1 TO 4	POTHOLE, MANHOLE LOGS, UTILITY TABULATION
421	1	UTILITY KEYMAP
422-436	1 TO 15	UTILITY PLANS
437	1	GENERAL NOTES & QUANTITY TABS DWMD SEWER
438	1	SANITARY SEWER RELOCATION
439-446	1 TO 8	WASTEWATER MANAGEMENT DIV. STANDARD DETAILS
447-468	1 TO 22	LIGHTING PLANS
469-472	1 TO 4	LANDSCAPE PLANS & GENERAL NOTES
473-480	1 TO 8	WALL ELEVATIONS, AESTHETIC DETAILS

FOR
OCT. 7, 2010

PHASE 2
STAGE 1.2 & 1.3

Print Date: 9/28/2010	Sheet Revisions	Colorado Department of Transportation	As Constructed
File Name: 16311DES_PH2_TitleSheet.dgn	Date: / Comments / Init.	8833 South Wadsworth Court	No Revisions:
Horiz. Scale: 1:1000 Vert. Scale: As Noted		Littleton, CO 80128	Revised:
Unit Information Unit Leader Initials		Phone: 303-972-9112 FAX: 303-972-9114	Void:
FELSBURG HOLT & ULLEVIG 6300 South Syracuse Way Centennial, CO 80111		Region 6 RLB	

Contract Information	Project No./Code
Contractor:	IM 0254-394
Resident Engineer: Ron Buck	16311
Project Engineer: Terrie McKinney	Sheet Number 1
PROJECT STARTED: / / ACCEPTED: / /	
Comments:	

Stan 9:37:52 AM K:\08276\16311\Phase 2\Design\Drawings\16311DES_PH2_TitleSheet.dgn
9/28/2010 CDOT-PDFDraftQuality_XM.pltcfg CDOT-PenTable.tbl

TABULATION OF ROADWAY LENGTH & DESIGN DATA

ROADWAY LENGTH	FEET					
	ROADWAY					MAJOR STR.
	I-25	NB SANTA FE	SB SANTA FE	HOME DEPOT	I-25 FRONTAGE	
BEGIN I-25 STA. 615+49.08 (Ultimate I-25 Stationing)						
STA. 630+64.10 BEGIN STRUCTURE F-16-XS						
STA. 636+61.09 END STRUCTURE F-16-XS						596.99
END I-25 STA. 644+75.00 (Ultimate I-25 Stationing)	2328.93					
BEGIN NB SANTA FE STA. 712+52.70						
END NB SANTA FE STA. 734+71.79		2219.09				
BEGIN SB SANTA FE STA. 805+00.00						
END SB SANTA FE STA. 818+43.15			1343.15			
BEGIN HOME DEPOT ACCESS ROAD						
STA. 93+12.75						
END HOME DEPOT ACCESS ROAD						
STA. 96+30.82				318.07		
BEGIN I-25 FRONTAGE ROAD						
STA. 12+23.43						
END I-25 FRONTAGE ROAD						
STA. 16+05.58					382.15	
		.				
TOTAL	2328.93	2219.09	1343.15	318.07	382.15	596.99
SUMMARY OF PROJECT LENGTH	FEET					MILES
MAJOR STRUCTURE	596.99					0.113
PROJECT GROSS LENGTH	6591.39					1.248

ROADWAY DESIGN DATA	I-25	NB SANTA FE	SB SANTA FE	
MINIMUM RADIUS OF CURVE	1775 FT	250 FT	222 FT	
MAXIMUM GRADE	4.00%	3.75%	1.22%	
MINIMUM S.S.D. HORIZONTAL	498 FT	211 FT	152 FT	
MINIMUM S.S.D. VERTICAL	771 FT	254 FT	645 FT	
MINIMUM DESIGN SPEED	55 MPH	25 MPH	25 MPH	
2025 DESIGN TRAFFIC	DHV = 14,500	DHV = 2,500	DHV = 2,400	
	ADT = 226,000	ADT = 34,600	ADT = 12,800	
DHV TRUCK %	6%	12%	12%	
MINIMUM CLEAR ZONE DISTANCE (TANGENT)	22 FT	-	-	
DESIRABLE CLEAR ZONE DISTANCE (TANGENT)	34 FT	-	-	
MINIMUM CLEAR ZONE DISTANCE (RADIUS < 2860 FT)	27 FT	-	-	

Stan 9:38:01 AM K:\08276\16311\Phase 2\Design\Drawings\16311DES_PH2_DesignData1.dgn
9/27/2010 CDOT-PDFDraftQuality_XM.pltcfg CDOT-PenTable.tbl

Print Date: 9/27/2010
File Name: 16311DES_PH2_DesignData1.dgn
Horiz. Scale: 1:1 Vert. Scale: As Noted
Unit Information Unit Leader Initials

FELSBURG HOLT & ULLEVIG 6300 South Syracuse Way Centennial, CO 80111

Sheet Revisions

Date:	Comments	Init.

Colorado Department of Transportation
DOT DEPARTMENT OF TRANSPORTATION
2000 South Holly Street
Denver, CO 80222
Phone: 303-972-9112 FAX: 303-972-9114
Region 6 RLB

As Constructed
No Revisions:
Revised:
Void:

I-25/SANTA FE INTERCHANGE
TABULATION OF LENGTH & DESIGN DATA

Designer: SPG
Detailer: SYS
Sheet Subset: MISC
Structure Numbers:
Subset Sheets: DD-1 of 2

Project No./Code
IM 0254-394
16311
Sheet Number 2

TABULATION OF RAMPS LENGTH & DESIGN DATA

RAMP LENGTH	FEET				
	RAMP				MAJOR STR.
	RAMP 1	RAMP 2	RAMP 3	RAMP 4	
BEGIN RAMP 1 STA. 104+91.95					
STA. 111+61.45 BEGIN STRUCTURE F-16-XR					
STA. 129+60.61 END STRUCTURE F-16-XR					1799.16
END RAMP 1 STA. 135+99.06	1307.95				
BEGIN RAMP 2 STA. 205+01.96					
END RAMP 2 STA. 217+06.69		1204.73			
BEGIN RAMP 3 STA. 303+02.72					
END RAMP 3 STA. 309+80.75			678.03		
BEGIN RAMP 4 STA. 404+27.16					
END RAMP 4 STA. 415+91.51				1164.35	
TOTAL	1307.95	1204.73	678.03	1164.35	1799.16
SUMMARY OF PROJECT LENGTH	FEET				MILES
MAJOR STRUCTURE	1799.16				0.341
PROJECT GROSS LENGTH	4355.06				0.825

RAMP DESIGN DATA	RAMP 1	RAMP 2	RAMP 3	RAMP 4
MINIMUM RADIUS OF CURVE	1160 FT	278 FT	1050 FT	1512 FT
MAXIMUM GRADE	5.00%	3.75%	6.50%	3.59%
MINIMUM S.S.D. HORIZONTAL	305 FT	244 FT	431 FT	409 FT
MINIMUM S.S.D. VERTICAL	415 FT	534 FT	331 FT	378 FT
MINIMUM DESIGN SPEED	40 MPH	25 MPH	35 MPH	45 MPH
2025 DESIGN TRAFFIC	DHV = 2,800	DHV = 1,150	DHV = 1,350	DHV = 2,550
	ADT = 34,300	ADT = 11,300	ADT = 13,000	ADT = 37,200
DHV TRUCK %	9%	9%	9%	9%
MINIMUM CLEAR ZONE DISTANCE (TANGENT)	14 FT	14 FT	14 FT	14 FT
DESIRABLE CLEAR ZONE DISTANCE (TANGENT)	24 FT	24 FT	24 FT	24 FT
MINIMUM CLEAR ZONE DISTANCE (RADIUS < 2860 FT)	17 FT	19 FT	20 FT	17 FT

Stan 9:38:04 AM K:\08276\16311\Phase 2\Design\Drawings\16311DES_PH2_DesignData2.dgn
9/27/2010 CDOT-PDFDraftQuality_XM.pltcfg CDOT-PenTable.tbl

Print Date: 9/27/2010
File Name: 16311DES_PH2_DesignData2.dgn
Horiz. Scale: 1:1 Vert. Scale: As Noted
Unit Information Unit Leader Initials

FELSBURG HOLT & ULLEVIG 6300 South Syracuse Way Centennial, CO 80111

Sheet Revisions

Date:	Comments	Init.

Colorado Department of Transportation
2000 South Holly Street
Denver, CO 80222
Phone: 303-972-9112 FAX: 303-972-9114
Region 6 RLB

As Constructed
No Revisions:
Revised:
Void:

I-25/SANTA FE INTERCHANGE
TABULATION OF LENGTH & DESIGN DATA

Designer: SPG
Detailer: SYS
Sheet Subset: MISC
Structure Numbers:
Subset Sheets: DD-2 of 2

Project No./Code
IM 0254-394
16311
Sheet Number 3

PLAN NUMBER	NEW OR REVISED	M STANDARD TITLE	PAGE NUMBER
■		M-100-1 STANDARD SYMBOLS (3 SHEETS)	1-3
□		M-203-1 APPROACH ROADS	4
□		M-203-2 DITCH TYPES	5
■		M-203-11 SUPERELEVATION CROWNED AND DIVIDED HIGHWAYS (3 SHEETS)	6-8
■		M-203-12 SUPERELEVATION STREETS (2 SHEETS)	9-10
■		M-206-1 EXCAVATION AND BACKFILL FOR STRUCTURES (2 SHEETS)	11-12
■		M-206-2 EXCAVATION AND BACKFILL FOR BRIDGES (2 SHEETS)	13-14
	■	M-208-1 TEMPORARY EROSION CONTROL (12 SHEETS) (REVISED ON AUGUST 26, 2010)	~~15-21~~
□		M-210-1 MAILBOX SUPPORTS (2 SHEETS)	22-23
■		M-214-1 PLANTING DETAILS	24
	■	M-412-1 CONCRETE PAVEMENT JOINTS (5 SHEETS) (REVISED ON JULY 09, 2009)	~~25-29~~
□		M-510-1 STRUCTURAL PLATE PIPE H-20 LOADING	30
□		M-601-1 SINGLE CONCRETE BOX CULVERT (2 SHEETS)	31-32
□		M-601-2 DOUBLE CONCRETE BOX CULVERT (2 SHEETS)	33-34
□		M-601-3 TRIPLE CONCRETE BOX CULVERT (2 SHEETS)	35-36
□		M-601-10 HEADWALL FOR PIPES	37
□		M-601-11 TYPE "S" SADDLE HEADWALLS FOR PIPE	38
□		M-601-12 HEADWALLS AND PIPE OUTLET PAVING	39
□		M-601-20 WINGWALLS FOR PIPE OR BOX CULVERTS	40
	■	M-603-1 METAL PIPE (4 SHEETS) (REVISED ON FEBRUARY 25, 2010)	~~41-42~~
■		M-603-2 REINFORCED CONCRETE PIPE	43
	■	M-603-3 PRECAST CONCRETE BOX CULVERT (REVISED ON JULY 09, 2009)	~~44~~
	■	M-603-4 CORRUGATED POLYETHYLENE PIPE (AASHTO M294) (REV. ON FEB. 25, 2010)	
	□	M-603-5 POLYVINYL CHLORIDE (PVC) PIPE (AASHTO M304) (NEW ON FEB. 25, 2010)	
□		M-603-10 CONCRETE AND METAL END SECTIONS (2 SHEETS)	45-46
■		M-604-10 INLET, TYPE C	47
□		M-604-11 INLET, TYPE D	48
□		M-604-12 CURB INLET TYPE R (2 SHEETS)	49-50
□		M-604-13 CONCRETE INLET TYPE 13	51
■		M-604-20 MANHOLES (3 SHEETS)	52-54
■		M-604-25 VANE GRATE INLET (5 SHEETS)	55-59
	■	M-605-1 SUBSURFACE DRAINS (REVISED ON JULY 09, 2009)	~~60~~
■	□	M-606-1 GUARDRAIL TYPE 3 W-BEAM (17 SHEETS) (REVISED ON AUG. 11, 2010)	~~61 76~~
■		M-606-13 GUARDRAIL TYPE 7 F-SHAPE BARRIER (4 SHEETS)	77-80
■		M-606-14 PRECAST TYPE 7 CONCRETE BARRIER (3 SHEETS)	81-83

PLAN NUMBER	NEW OR REVISED	M STANDARD TITLE	PAGE NUMBER
□		M-607-1 WIRE FENCES AND GATES (3 SHEETS)	84-86
□		M-607-2 CHAIN LINK FENCE (3 SHEETS)	87-89
□		M-607-3 BARRIER FENCE	90
□		M-607-4 DEER FENCE AND GATES (2 SHEETS)	91-92
□		M-607-10 PICKET SNOW FENCE	93
□		M-607-15 ROAD CLOSURE GATE (9 SHEETS)	94-102
■		M-608-1 CURB RAMPS (4 SHEETS)	103-106
	■	M-609-1 CURBS, GUTTERS, AND SIDEWALKS (~~3~~ 4 SHEETS) (REVISED ON JULY 09, 2009)	~~107-109~~
□		M-611-1 CATTLE GUARD (2 SHEETS)	110-111
■		M-613-1 ROADWAY LIGHTING (4 SHEETS)	112-115
□		M-614-1 RUMBLE STRIPS (3 SHEETS)	116-118
□		M-614-2 SAND BARREL ARRAYS (2 SHEETS)	119-120
□		M-615-1 EMBANKMENT PROTECTOR TYPE 3	121
□		M-615-2 EMBANKMENT PROTECTOR TYPE 5	122
□		M-616-1 INVERTED SIPHON	123
□		M-620-1 FIELD LABORATORY CLASS 1	124
■		M-620-2 FIELD LABORATORY CLASS 2	125
□		M-620-11 FIELD OFFICE CLASS 1	126
■		M-620-12 FIELD OFFICE CLASS 2	127
□		M-629-1 SURVEY MONUMENTS (2 SHEETS)	128-129

PLAN NUMBER	NEW OR REVISED	S STANDARD TITLE	PAGE NUMBER
	■	S-612-1 DELINEATOR INSTALLATIONS (6 SHEETS) (REVISED, JULY 01, 2010)	~~131-135~~
■		S-614-1 GROUND SIGN PLACEMENT (2 SHEETS)	136-137
■		S-614-2 CLASS I SIGNS	138
■		S-614-3 CLASS II SIGNS	139
■	□	S-614-4 CLASS III SIGNS (3 SHEETS) (REVISED, DECEMBER 29, 2009)	140-142
■		S-614-5 BREAK-AWAY SIGN SUPPORT DETAILS FOR GROUND SIGNS (2 SHEETS)	143-144
■		S-614-6 CONCRETE FOOTINGS AND SIGN ISLANDS FOR CLASS III SIGNS (2 SHEETS)	145-146
	■	S-614-8 TUBULAR STEEL SIGN SUPPORT DETAILS (5 SHEETS) (REVISED ON SEPT. 01, 2010)	~~147-151~~
■		S-614-10 MARKER ASSEMBLY INSTALLATIONS	152
	■	S-614-11 MILEPOST SIGN DETAIL FOR HIGH SNOW AREAS (NEW, JUNE 22, 2009)	
■		S-614-12 STRUCTURE NUMBER INSTALLATION	153
□		S-614-14 FLASHING BEACON AND SIGN INSTALLATIONS (3 SHEETS)	154-156
■		S-614-20 TYPICAL POLE MOUNT SIGN INSTALLATIONS	157
■		S-614-21 CONCRETE BARRIER SIGN POST INSTALLATIONS	158
■		S-614-22 TYPICAL MULTI-SIGN INSTALLATIONS	159
■		S-614-40 TYPICAL TRAFFIC SIGNAL INSTALLATION DETAILS (7 SHEETS)	160-166
□		S-614-40A ALTERNATIVE TRAFFIC SIGNAL INSTALLATION DETAILS (5 SHEETS)	167-171
■		S-614-50 MONOTUBE OVERHEAD SIGNS (14 SHEETS)	172-185
	■	S-627-1 PAVEMENT MARKINGS (5 SHEETS) (REVISED ON JULY 28, 2009)	~~186-190~~
	■	S-630-1 TRAFFIC CONTROLS FOR HIGHWAY CONSTRUCTION (REVISED ON FEB. 17, 2010) (~~12~~ 19 SHEETS)	~~191-202~~
■		S-630-2 BARRICADES, DRUMS, CONCRETE BARRIERS (TEMP.) AND VERTICAL PANELS	203
■		S-630-3 FLASHING BEACON (PORTABLE) DETAILS	204
	□	S-630-4 STEEL SIGN SUPPORT (TEMPORARY) INSTALLATION DETAILS (NEW, MARCH 22, 2010)	

THE STANDARD PLAN SHEETS INDICATED HEREON BY A MARKED BOX ARE TO BE USED TO CONSTRUCT THIS PROJECT.

ALL OF THE M&S STANDARD PLANS, AS SUPPLEMENTED AND REVISED, APPLY TO THIS PROJECT WHEN USED BY DESIGNATED PAY ITEM OR SUBSIDIARY ITEM.

COLORADO
DEPARTMENT OF TRANSPORTATION

STANDARD PLANS LIST
M&S STANDARDS
July 04, 2006
Revised on September 01, 2010

Print Date: 9/27/2010
File Name: 16311DES_PH2_StdPlanList.dgn
Horiz. Scale: 1:1 Vert. Scale: As Noted
Unit Information Unit Leader Initials

FELSBURG HOLT & ULLEVIG 6300 South Syracuse Way Centennial, CO 80111

Sheet Revisions		
Date:	Comments	Init.

Colorado Department of Transportation
2000 South Holly Street
Denver, CO 80222
Phone: 303-972-9112 FAX: 303-972-9114
Region 6 RLB

As Constructed
No Revisions:
Revised:
Void:

I-25/SANTA FE INTERCHANGE
STANDARD PLANS LIST

Designer: CDOT
Detailer: SYS
Sheet Subset: ROADWAY
Structure Numbers:
Subset Sheets: SP-1 of 1

Project No./Code
IM 0254-394
16311
Sheet Number 4

Stan 9:38:08 AM K:\08276\16311\Phase 2\Design\Drawings\16311DES_PH2_StdPlanList.dgn
9/27/2010 CDOT-PDFDraftQuality_XM.pltcfg CDOT-PenTable.tbl

GENERAL NOTES

All construction shall be completed per the Colorado Department of Transportation (CDOT) Standard Plans and Specifications, latest edition, or as shown.

TOPO and existing grading shown in these plans, along I-25 from approximately Station 634+80 to Station 668+00 and along Alameda Avenue at the Alameda over I-25 Bridge, is based on contract plans for CDOT Project No. ES6 C010-101. The Contractor shall field verify actual topography and grading in these areas prior to construction.

The information shown on these plans concerning the type and location of underground utilities is not guaranteed to be accurate or all inclusive. The Contractor's attention is directed to Subsection 105.10 of the CDOT Standard Specifications for Road and Bridge Construction. The Contractor shall determine the type and location of underground utilities as may be necessary to avoid damage thereto. The Contractor shall comply with Article 1.5 of Title 9, CRS ("Excavation Requirements") when excavating or grading is planned in the area of underground utility facilities. The Contractor shall notify all affected utilities at least two (2) business days, not including the actual day of notice, prior to commencing such operations. The Contractor shall contact the Utility Notification Center of Colorado (UNCC) at 811or 1-800-922-1987, to have locations of UNCC registered lines marked by member companies. All other underground facilities shall be located by contacting the respective owner. Utility service laterals shall also be located prior to beginning excavation or grading. The Contractor shall locate non-member utilities, such as storm sewer and ditch facilities as necessary to prevent damage thereto

The Contractor shall be responsible for contacting and coordinating with the appropriate utility representatives to be onsite during potholing. The Contractor shall refer to the utility specification for additional requirements.

It is suggested that the Contractor initiate a request to Xcel Energy for any construction related temporary electrical power sources as soon as possible. The request is to be processed through Xcel Energy–Builder's Call Line at 1-800-628-2121.

It is suggested that the Contractor call Xcel Energy at 1-800-895-1999 for an electric emergency.

It is suggested that the Contractor call Xcel Energy at 1-800-895-2999 for a gas emergency.

Any curb and gutter or asphalt or concrete pavement, which is to remain and is damaged as a result of the Contractor's operation, shall be replaced at the Contractor's expense.

All references to SMA shall be taken to be Stone Matrix Asphalt (Fibers)(Asphalt) or SMA (Fibers)(Asphalt).

The nominal maximum aggregate size for SMA shall be one-half inch.

SMA shall not contain reclaimed asphalt pavement.

For preliminary plan quantities of pavement materials, the following rates of application were used:

Tack Coat Diluted Emulsified Asphalt.....@ 0.1 Gals./Sq. Yd.(Diluted)
Hot Mix Asphalt.....@ 110 Lbs./Sq. Yd./Inch
Stone Matrix Asphalt (Fibers)(Asphalt).....@ 110 LBS/Sq. Yd./Inch
Aggregate Base Course Class 6.....@ 133 Lbs./Cu. Ft.

A tack coat is required between layers of bituminous pavement. Diluted emulsified asphalt for tack coat shall consist of 1 part emulsified asphalt and 1 part water.

Where new pavement is to abut existing pavement, the existing pavement shall be removed to a neat vertical line using a cutting saw or other method as approved by the Engineer. Saw cutting asphalt will not be paid for separately, but shall be included in the cost of Removal of Asphalt Mat, or Removal of detour as appropriate.

Any layer of bituminous pavement that is to have a succeeding layer placed thereon shall be completed full width before succeeding layer is placed.

Asphalt patching shall be to the depth of the surrounding existing pavement as directed by the Engineer. Lower lifts may utilize HMA (S)(100)(PG 64-22). The top lift should match the surrounding pavement, be it HMA (S)(100)(PG 64-22), HMA (SX)(100)(PG 76-28), or SMA (Fibers)(Asphalt). The thickness of subsequent lifts must be equal or greater than the lift directly above. The minimum lift thicknesses shall be 2 and 3 inches, respectively.

Prior to placing bituminous pavement, the paved surface shall be swept and cleaned. This will not be paid for separately, but shall be included in the cost of the Hot Mix Asphalt Pavement item.

Incentive/disincentive payments will not be used for HMA smoothness, but for quality purposes the HMA smoothness category will be HRI Category II.

All travel lanes of the final PCCP section will be subject to incentive/disincentive payments for smoothness. The PCCP smoothness category is Category II.

Class E concrete, if used on the project, shall attain a minimum compressive strength of 2500 psi within 3 hours.

The Contractor shall not park any vehicles or equipment in, or disturb any areas not approved by the Engineer.

Water shall be used as a dust palliative where required. Locations shall be as directed by the Engineer. Water for a dust palliative will not be paid for separately, but shall be included in the work. Contaminated groundwater can not be used as a dust palliative.

Moisture-density control will be required for the full depth of those embankments on this project.

Excavation required for compaction of bases of cuts and fills will be considered as subsidiary to that operation and will not be paid for separately.

Type of compaction for this project will be AASHTO T-99 for cohesive soils and T-180 for granular soils as described in Section 203.07 of the CDOT Standard Specifications.

Concrete pipe joint fasteners as shown on M-Standard are required on:
All concrete culvert installations excluding side drains.

To provide for adequate sulfate resistance in all concrete supplied for this project, Severity of Potential Exposure is Class 2. The Contractor may at his own expense have a certified laboratory test the subgrade as per the Field Materials Manual. Testing shall be the same schedule and frequency as required for a preliminary soils survey. The Contractor may propose a different Class of Exposure for the project based on those test results.

The Contractor shall protect all existing survey monumentation designated to remain from damage during construction operations. Any monuments disturbed by the Contractor that are not designated for relocation, shall be reset at the Contractor's expense. The Contractor and Engineer shall note those monuments in the field prior to construction. See Tabulation of Survey.

Construction vehicles shall access the project from public property, not adjacent private properties.

Stan 9:38:12 AM K:\08276\16311\Phase 2\Design\Drawings\16311DES_PH2_GenNotes1.dgn
9/27/2010 CDOT-PDFDraftQuality_XM.pltcfg CDOT-PenTable.tbl

Print Date: 9/27/2010
File Name: 16311DES_PH2_GenNotes1.dgn
Horiz. Scale: 1:1 Vert. Scale: As Noted
Unit Information Unit Leader Initials

FELSBURG HOLT & ULLEVIG 6300 South Syracuse Way Centennial, CO 80111

Sheet Revisions

Date:	Comments	Init.

Colorado Department of Transportation
2000 South Holly Street
Denver, CO 80222
Phone: 303-972-9112 FAX: 303-972-9114
Region 6 RLB

As Constructed
No Revisions:
Revised:
Void:

I-25/SANTA FE INTERCHANGE
GENERAL NOTES

Designer: JMS
Detailer: SYS
Sheet Subset: MISC
Structure Numbers:
Subset Sheets: GN-1 of 2

Project No./Code
IM 0254-394
16311
Sheet Number 5

GENERAL NOTES CONTINUED

Groundwater within the project limits has the potential to contain chemical compounds at concentrations greater than that acceptable for direct discharge under standard NPDES permits. The Contractor is advised to limit pumping of groundwater in all project excavations, by careful scheduling, expediting the work and use of conscientious construction methods. The Contractor shall minimize the disturbance of contaminated groundwater by avoidance and limit intrusion of groundwater into excavations.

Costs incurred by the Contractor for the removal, sample collection, analytical testing, containerization, transportation, and disposal or treatment of contaminated groundwater will be paid for under Force Account 700-70589 Environmental Health & Safety Management.

Removal, sample collection, containerization, transportation, and disposal of contaminated soil will be paid for in accordance with Section 250.

Analytical testing of soil will be paid for under Force Account Environmental, Health and Safety Management

A State Certified Asbestos Building Inspector (CABI) shall inspect for the presence of asbestos during subsurface work on potentially asbestos containing materials or when building/construction debris is encountered. If asbestos is found, all further work (soil-related) shall proceed in accordance with CDOT's 250 spec, the Air Quality Control Commission Regulation No. 8 Part B, and the Colorado Department of Public Health and Environment Hazardous Materials and Waste Management Division Section 5.5 of the Regulations (6 CCR 1007-2). Inspection and management will be paid for under Force Account Environmental, Health and Safety Management.

Several Colorado Department of Public Health & Environment (CDPHE) test wells are located within the project limits. Care shall be taken not to disturb the well and access to the well shall be maintained. Refer to Roadway Plans for locations.

Santa Fe is classified as urban with regard to Revision of Section 105 — Failure to Maintain Roadway or Structure.

Trees not designated for removal, shall be protected by fence (plastic). Location of tree protection shall be directed by the R6 Landscape Architect, Wetlands Biologist & Engineer.

After project completion, CDOT will maintain water quality infrastructure and appurtenances installed as part of the project, within the City and County of Denver Right-of-Way.

It is estimated that the following items will be required on this project.

Item No.	Description	Unit	Total
201-00000	Clearing and Grubbing	LS	1
202-00011	Tree Trimming	Each	
203-01597	Potholing	Hour	
240-00000	Wildlife Biologist	Hour	
250-00010	Environmental Health & Safety Management	LS	
250-00050	Monitoring Technician	Hour	
250-00110	Health & Safety Officer	Hour	
250-00120	Materials Sampling and Delivery	Each	
250-00200	Materials Handling (Stockpile)	CY	
250-00210	Solid Waste Disposal	CY	
250-00220	Hazardous Waste Disposal	CY	
617-03000	Detour Culvert Pipe	LS	
620-00005	Field Office (Special)	Each	1
620-00012	Field Laboratory (Class 2)	Each	1
620-00020	Sanitary Facility	Each	1
621-00425	Detour	LS	1
625-00000	Construction Surveying	LS	1
626-00000	Mobilization	LS	1
626-01000	Public Information Services	LS	1
700-70010	F/A Minor Contract Revision	F A	1
700-70011	F/A Partnering	F A	1
700-70013	F/A Concrete Pavement Incentive	F A	1
700-70016	F/A Fuel Cost Adjustment	F A	1
700-70018	F/A Roadway Smoothness Incentive	F A	1
700-70019	F/A Asphalt Cement Cost Adjustment	F A	1
700-70021	F/A On-The-Job Trainee	Hour	xxxx
700-70022	F/A OJT Colorado Training Program	F A	1
700-70025	F/A Quality Incentive Payment	F A	1
700-70028	F/A ESB Program	F A	1
700-70031	F/A Interim Surface Repair	F A	1
700-70034	F/A Landscape Restoration	F A	1
700-70035	F/A Uniformed Traffic Control (Officer Time)	F A	1
700-70036	F/A Provide Security Guard	F A	1
700-70072	F/A Obtain Power from XCEL Energy	F A	1
700-70380	F/A Erosion Control	F A	1
700-70589	F/A Environmental Health & Safety Management	F A	1

Stan 9:38:16 AM K:\08276\16311\Phase 2\Design\Drawings\16311DES_PH2_GenNotes2.dgn
9/27/2010 CDOT-PDFDraftQuality_XM.pltcfg CDOT-PenTable.tbl

Print Date: 9/27/2010
File Name: 16311DES_PH2_GenNotes2.dgn
Horiz. Scale: 1:1 Vert. Scale: As Noted
Unit Information Unit Leader Initials

FELSBURG HOLT & ULLEVIG 6300 South Syracuse Way Centennial, CO 80111

Sheet Revisions

Date:	Comments	Init.

Colorado Department of Transportation
2000 South Holly Street
Denver, CO 80222
Phone: 303-972-9112 FAX: 303-972-9114
Region 6 RLB

As Constructed
No Revisions:
Revised:
Void:

I-25/SANTA FE INTERCHANGE
GENERAL NOTES

Designer: JMS
Detailer: SYS
Sheet Subset: MISC
Structure Numbers:
Subset Sheets: GN-2 of 2

Project No./Code
IM 0254-394
16311
Sheet Number 6

TO ESTABLISH GEOMETRIC CONTROL FOR THE CONSTRUCTION OF THIS PROJECT, THE DEPARTMENT HAS PROVIDED THE FOLLOWING INFORMATION:

	Format *
■ Horizontal Control	Plan Sheet
■ Vertical Control	Plan Sheet
□ Roadway Alignment	
□ Original Terrain Data	
□ Other:	

* Specify the information format, ie., plan sheet, computer disk, computer printout, or other. The information marked is either contained on the plans or is available from the Engineer.

TYPE OF PROJECT

- ■ Landscaping
- ■ Signalization
- □ Safety Improvement
- □ Asphalt Overlay
- □ Concrete Overlay
- □ Minor Widening
- ■ Major Reconstruction
- □ New Roadway Construction
- ■ Bridge Replacement
- □ Bridge Widening
- ■ New Bridge
- □ Other: _____

SURVEY WORK TO BE PERFORMED BY OTHERS: _____

WORK PERFORMED BY THE CONTRACTOR'S SURVEYOR UNDER SECTION 625:

- ___ ■ Establish and Maintain Project Centerline or Engineer Approved Offset Line(s)
- ___ ■ Verification and Maintenance of Horizontal and Vertical Control
- ___ ■ Verify or Determine existing grades and alignments
- ___ ■ Verify or Determine existing topography
- ___ ■ Clearing and Grubbing Limits (Section 201)
- ___ ■ Removal Limits (Section 202)
- ___ ■ Reset Items (Section 210)
- ___ ■ Excavation and Embankment (Section 203)
  - ___ ■ Excavation
    - ___ ■ Unclassified
    - ___ □ Stripping
    - ___ □ Muck
    - ___ □ Rock
    - ___ □ Borrow
    - ___ □ Other: _____
    - ___ □ Potholing
  - ___ ■ Embankment
  - ___ ■ Site Grading
  - ___ ■ Erosion Control (Perm)
  - ___ □ Other: _____
  - ___ □ As Staked Earthwork Quantities (See General Notes)

Excavation	Slope Staking (Y/N)	Grid (Y/N)	Grade Stakes	Special Interval
	-	-	-	-
	-	-	-	-
	-	-	-	-
	-	-	-	-
	-	-	-	-
	-	-	-	-

Embankment				
	-	-	-	-
	-	-	-	-
	-	-	-	-
	-	-	-	-

- ___ ■ Landscaping
  - ___ ■ Top Soil (Section 207)
  - ___ ■ Seeding (Section 212)
  - ___ ■ Mulching (Section 213)
  - ___ ■ Planting (Section 214)
  - ___ ■ Herbicide (Section 217)
  - ___ □ Other: _____
- ___ ■ Erosion Control (Section 208)
  - ___ ■ Seeding (Temp)
  - ___ ■ Silt Fence
  - ___ ■ Erosion Bales
  - ___ ■ Erosion Logs
  - ___ ■ Riprap (Temp)
  - ___ □ Other: _____
- ___ ■ Roadway Bases
  - ___ □ Untreated Subgrade
  - ___ □ Treated Subgrade
  - ___ ■ Aggregate Base Course (Section 304)
  - ___ □ Reconditioning
  - ___ □ PMBB - Plant Mix Bituminous Base
  - ___ □ Other: _____

Roadway Bases	Grid (Y/N)	Grade (Y/N)	Special Interval	Special Offset
	-	-	-	-
	-	-	-	-
	-	-	-	-
	-	-	-	-
	-	-	-	-
	-	-	-	-

- ___ ■ Pavements
  - ___ ■ HMA - Hot Mix Asphalt (Section 403)
  - ___ ■ Concrete (Section 412)
  - ___ □ Heating & Scarifying Treatment
  - ___ □ Prime Coat, Tack Coat & Rejuvenating Agent (Section 407)
  - ___ □ Seal Coat or Chip Seal (Section 409)
  - ___ □ Other: _____
- ___ ■ Roadway Elements
  - ___ ■ Curb and Gutter (Section 609)
  - ___ ■ Drop inlets - alignment and grades (Section 604)
  - ___ ■ Retaining Walls
  - ___ ■ Guard Rail (Section 606)
  - ___ ■ Sidewalk (Section 608)
  - ___ □ Overlay Stationing
  - ___ □ Other: _____
- ___ ■ Riprap (Perm) (Section 506)
- ___ ■ Slope and Ditch Paving (Section 507)
- ___ ■ Minor Structures
  - ___ ■ Structure Excavation limits (Section 206)
  - ___ ■ Culverts (Section 603)
  - ___ ■ Culverts w/ Headwalls and Wingwalls (Section 601)
  - ___ ■ Concrete Box Culverts w/ Headwalls and Wingwalls
  - ___ ■ Pipes (Section 603)
    - ___ ■ Sanitary Sewer
    - ___ ■ Storm Sewer
    - ___ □ Water
    - ___ ■ Irrigation
    - ___ □ Miscellaneous
  - ___ ■ Manholes (Section 604)
  - ___ ■ Inlets (Section 604)
  - ___ □ Other: _____
- ___ ■ Major Structures - Overhead Signs (Section 614), Concrete Box Culverts, Bridges - and all other structures assigned a structure number
  - ___ ■ Structure Excavation limits (Section 206)
  - ___ ■ Concrete Box Culverts (Section 603) w/ Headwalls and Wingwalls (Section 601)
  - ___ □ Piling locations and cut off elevations (Section 502)
  - ___ ■ Caisson locations and elevations (Section 503)
  - ___ ■ Footing locations, alignment, and elevations
  - ___ ■ Abutment/Pier locations, alignment, and elevations
  - ___ ■ Wingwall skew angles/offsets
  - ___ ■ Structural concrete form locations
  - ___ ■ Substructure As-constructed survey required for Bridges (Subsection 601 .12) and Overhead signs (S-614-50)
  - ___ ■ Bridge expansion joint(s) alignment and grade (longitudinal and transverse)
  - ___ ■ Deck grades at Girder 10th or "n" th point locations and elevations
  - ___ ■ Slope and Ditch Paving (Section 507)
  - ___ □ Other: _____
- ___ ■ Fencing (Section 607)
  - ___ ■ Temporary
  - ___ ■ Permanent
  - ___ □ Sound Barrier
  - ___ □ Other: _____
- ___ ■ Delineators (Section 612)
  - ___ ■ Temporary
  - ___ ■ Permanent
- ___ ■ Lighting (Section 613) and Traffic Control Devices (Permanent) (Section 614)
  - ___ ■ Signal pole locations and elevations
  - ___ ■ Light pole locations and elevations
  - ___ ■ Sign locations
  - ___ ■ Field verify sign post locations, elevations, and lengths before fabrication.
  - ___ □ Other: _____

Pavements	Grid (Y/N)	Special Interval	Special Offset
	-	-	-
	-	-	-
	-	-	-
	-	-	-
	-	-	-
	-	-	-

Curb & Gutter	Tangent Interval	Curve Interval	Special Offset
	-	-	-

Stationing	Left Interval	Center Interval	Right Interval
	-	-	-

- ___ ■ Pavement Marking (Section 627)
  - ___ ■ Striping (Temp)
  - ___ ■ Striping (Perm)
  - ___ ■ Symbols
  - ___ □ Other: _____
- ___ ■ Temporary Lighting and Construction Traffic Control Devices (Section 630)
  - ___ ■ Signal pole locations and elevations (Temp)
  - ___ ■ Light pole locations and elevations (Temp)
  - ___ ■ Sign Locations (Temp)
  - ___ □ Other: _____
- ___ □ Easements (Temp Staking by P.L.S. Only)
- ___ □ Right of Way (Temp Staking by P.L.S. Only)

WORK PERFORMED BY THE CONTRACTOR'S SURVEYOR UNDER SECTION 629:

- ___ □ Monumentation (Section 629)
  - ___ □ Control
  - ___ □ Right of Way
  - ___ □ Land corners, Aliquot corners
  - ___ □ Easements
  - ___ □ Reference the specified existing monuments:** _____
  - ___ □ Replace the specified existing monuments: ** _____
  - ___ □ Locate monuments. It is estimated ___ hours are required.

NOTE: All 629 items shall include adequate research, calculations, and evaluations of evidence for monuments to be set.

** A Tabulation of Survey Monuments may be provided on the plans.

GENERAL NOTES:

1. Unless indicated otherwise on this Survey Tabulation Sheet, all survey work and staking intervals shall be done in accordance with the latest edition of the CDOT Survey Manual.
2. Adequate information for establishing lines, grades, and locations for all work items have been specified on the plans. Any additional information required to stake the item or element shall be generated by the Contractor's surveyor.
3. The Contractor's surveyor shall provide an estimate of the man-hours necessary to complete the work items indicated on this sheet. A copy of this sheet, with the estimated man-hours written on the blank line to the left of the specified items, shall be submitted with the Survey Schedule to the Engineer _____ days prior to the Presurvey Conference - Construction Survey.
4. Stakes and Monuments which are damaged or destroyed by the progress of construction shall be replaced by the Contractor at no additional cost to the Department.
5. The Contractor shall furnish an As Staked earthwork quantity to the Engineer prior to completion of twenty percent (20%) of the planned earthwork in any phase as per the CDOT Survey Manual. A printed copy of the As Staked earthwork data and a computer disk in the specified format shall be submitted to the Engineer. The Contractor shall field verify original ground cross sections at a maximum 500 feet intervals.
6. Prior to beginning work on any subsequent operation, such as placing base course or paving, the Contractor shall certify in writing to the Engineer that the final grade is within specified tolerance.
7. The Contractor's surveyor shall perform all field surveying and calculations necessary to tie plan grades into field grades.
8. The Contractor shall coordinate construction staking on the project with any utility work.
9. Fieldbooks shall contain daily records of points set and or measurements observed. The information recorded shall contain: date, crew members' names, point no., description, staking information, and sketches. If the survey information is collected electronically, information recorded shall be provided to the Project Engineer in a hard copy format that is intuitive, clear and related to the supplemental information recorded in the field books. All linear surveys, such as slope stakes and blue tops, shall have the station and offset information related to the measured information. Non-linear surveys such as structures staking shall have sketches relating electronic information, such as point numbers, to the sketch.
10. The Contractor's surveyor shall submit the following fieldbooks to the Engineer:
    - ■ Horizontal Control (Primary & Secondary)
    - ■ Vertical Control (i.e. Benchmarks)
    - □ Property Pin Ties
    - ■ Horizontal Alignment
    - ■ Grading
    - ■ Slope Staking
    - ■ Minor Structures
    - ■ Major Structures
    - ■ One fieldbook for each work category shown on this sheet
    - □ Other Fieldbook(s): _____

Print Date: 9/27/2010
File Name: 16311DES_PH2_SurvTab.dgn
Horiz. Scale: 1:1 Vert. Scale: As Noted
Unit Information Unit Leader Initials

FELSBURG HOLT & ULLEVIG 6300 South Syracuse Way Centennial, CO 80111

Sheet Revisions		
Date:	Comments	Init.

Colorado Department of Transportation
2000 South Holly Street
Denver, CO 80222
Phone: 303-972-9112 FAX: 303-972-9114
Region 6 RLB

As Constructed
No Revisions:
Revised:
Void:

I-25/SANTA FE INTERCHANGE
SURVEY TABULATION

Designer: JMS
Detailer: SYS
Sheet Subset: ROADWAY
Structure Numbers
Subset Sheets: SU-1 of 1

Project No./Code
IM 0254-394
16311
Sheet Number 7

Stan 9:38:19 AM K:\08276\16311\Phase 2\Design\Drawings\16311DES_PH2_SurvTab.dgn
9/27/2010 CDOT-PDFDraftQuality_XM.pltcfg CDOT-PenTable.tbl

Colorado Department of Transportation
DOT
2000 South Holly
Denver, CO 80222
Phone: 303-757-9922 FAX: 303-757-9390
Region 6 PED

Sheet Revisions		
Date	Description	Initials
mm/yy	XXXXXXXX	XXX

SEC. 32 & 33 T3S, R68W
SEC. 3-10, 15, 16 & 22, T4S, R68W of the 6TH P.M.,
CITY & COUNTY of DENVER, COLORADO

Farnsworth GROUP
8055 EAST TUFTS AVENUE, SUITE 850
DENVER, COLORADO 80237
(303) 692-8838 / (303) 692-0470 Fax
www.f-w.com

Land Survey Control Diagram
Title Sheet

Project Number: IM 0252-394			
Project Location: I-25 & ALAMEDA INTERCHANGE			
Project Location: DENVER COLORADO			
Project Code:	Last Mod. Date	Subset Sheets	Sheet No.
16311	03-06-09	1 of 6	3.01

DEPARTMENT OF TRANSPORTATION
STATE OF COLORADO

LAND SURVEY CONTROL DIAGRAM
FEDERAL AID PROJECT NO. IM 0252-394
CITY AND COUNTY OF DENVER
PROJECT CODE NO. 16311
M.P. 205.3 TO M.P. 210.5

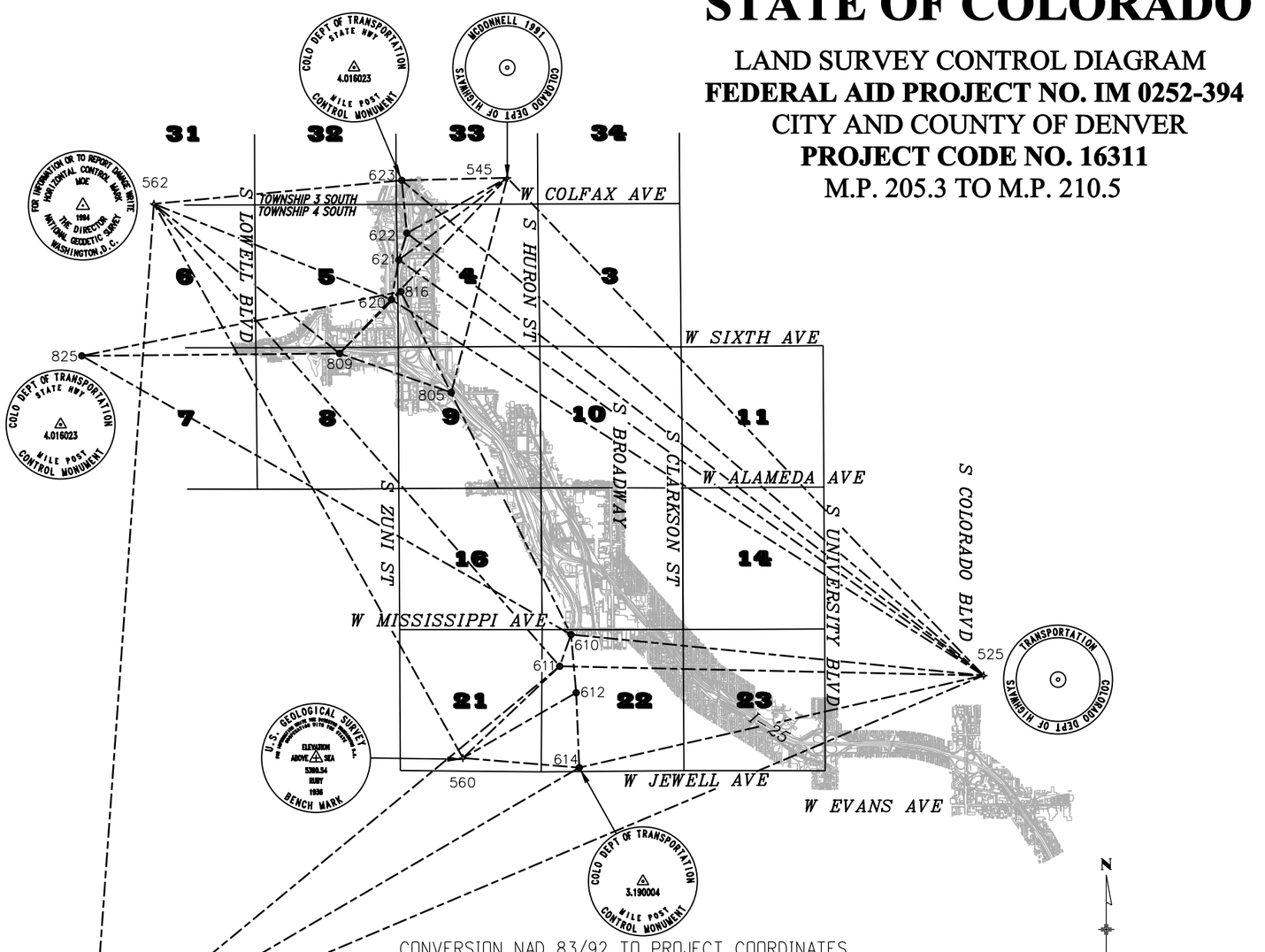

CONVERSION NAD 83/92 TO PROJECT COORDINATES

PROJECTION: USER-DEFINED OBLIQUE MERCATOR
ZONE = I-25 CORRIDOR
LATITUDE OF CENTRAL POINT = N39° 38'20.804470"
LONGITUDE OF CENTRAL POINT = W104° 54'49.026200"
CENTRAL POINT FALSE NORTHING = 656166.6667
CENTRAL POINT FALSE EASTING = 984250.0000
AZIMUTH OF ROTATED MERIDIAN = + 00° 22'11.369100"
SCALE ALONG ROTATED MERIDIAN = 1.000263782082
UNITS ARE U.S. SURVEY FEET.

NOTES:

1. THIS SURVEY IS NOT A COMPLETE BOUNDARY SURVEY OR RIGHT-OF-WAY SURVEY AND IS PREPARED FOR CDOT PROJECT CONTROL PURPOSES ONLY.

2. NOTICE: ACCORDING TO COLORADO LAW YOU MUST COMMENCE ANY LEGAL ACTION BASED UPON ANY DEFECT IN THIS SURVEY WITHIN THREE YEARS AFTER YOU FIRST DISCOVER SUCH DEFECT. IN NO EVENT MAY ANY ACTION BASED UPON ANY DEFECT IN THIS SURVEY BE COMMENCED MORE THAN TEN YEARS FROM THE DATE OF THE CERTIFICATION SHOWN HEREON.

3. NO WARRANTY IS IMPLIED OR EXPRESSED UNLESS THIS SHEET BEARS THE ORIGINAL SIGNATURE AND SEAL OF THE PREPARER.

4. FIELD SURVEY CONTROL PRECISION MEETS OR EXCEEDS CDOT TYPE "A" SURVEY REQUIREMENTS.

5. BASIS OF BEARINGS: A BEARING OF N43° 45'07"W BETWEEN COLORADO HIGH ACCURACY REFERENCE NETWORK (HARN) STATIONS "TRANSPORTATION" & "MCDONNELL" WAS UTILIZED AS THE BASIS OF BEARINGS FOR THIS SURVEY. SAID BEARING IS THE PROJECT GRID BEARING BETWEEN SAID STATIONS BASED ON NAD 83/92 MODIFIED COLORADO STATE PLANE COORDINATE SYSTEM (CENTRAL ZONE).

6. THIS SURVEY CONTROL DIAGRAM IS BASED ON THE STATE OF COLORADO HIGH ACCURACY REFERENCE NETWORK (HARN) POINTS "TRANSPORTATION, "MCDONNELL", "RUBY", "MOE" AND "LARRY" FOR HORIZONTAL VALUES.

7. BASIS OF ELEVATIONS: NATIONAL GEODETIC SURVEY BENCH MARK "K 394", ELEV = 5242.47' (NAVD '88). ELEVATIONS FOR FOUND POINTS REFLECT GPS OR RECORD VALUES.

8. STATE PLANE COORDINATES WERE MODIFIED TO THE SURFACE VIA A USER-DEFINED OBLIQUE MERCATOR PROJECTION (METHOD 2) SHOWN BELOW. THIS PROJECTION IS AVAILABLE IN TRIMBLE NAVIGATION SOFTWARE (TRIMNET ADJUSTMENT). THIS METHOD WAS SELECTED AFTER CAREFUL ANALYSES AND COMPARISON OF KNOWN SURFACE DISTANCES THROUGHOUT THE CORRIDOR. THE RESULTS INDICATE A MAXIMUM HORIZONTAL AND VERTICAL ERROR OF ° 0.10' WITH A 95% CONFIDENCE. THE FALSE NORTHING AND EASTING WERE UTILIZED IN ORDER TO AVOID ANY CONFUSION WITH STATE PLANE VALUES.

9. "BM SURVEY" REFERENCES THE SURVEY CONTROL DIAGRAM FOR CDOT PROJECT NUMBER IM 0252-315, PREPARED BY BENCHMARK SURVEYING.

10. "KM SURVEY" REFERENCES THE CONTROL AND MONUMENTATION SHEET FOR CDOT PROJECT NUMBER STA 0062-010, PREPARED BY KIRKHAM MICHAEL.

11. "MERRICK SURVEY" REFERENCES THE CONTROL AND MONUMENTATION SHEET FOR CDOT PROJECT NUMBER NH-IR 25-2 (174), PREPARED BY MERRICK.

12. "CDOT SURVEY" REFERENCES THOSE POINTS THAT THE CDOT REGION 6 SURVEY SECTION SUPPLIED FARNSWORTH GROUP TO INCLUDE IN THE LAND SURVEY CONTROL DIAGRAM.

SURVEYOR STATEMENT (LAND SURVEY CONTROL DIAGRAM)

I, _____, a professional land surveyor licensed in the State of Colorado, do hereby state to the Colorado Department of Transportation this Land Survey Control Diagram was prepared and the field survey it represents was performed under my responsible charge and, based upon my knowledge, information and belief is in accordance with applicable standards of practice defined by Colorado Department of Transportation publications. This statement is not a guaranty or warranty, either expressed or implied.

_____ _____
TERRY R. MAW, PLS No. 31161 *Date*

Ston 9:45:57 AM K:\08276\16311\Phase 2\RDW_Survey\Drawings\16311SURV_TitleLSCD01.dgn

Colorado Department of Transportation
2000 South Holly
Denver, CO 80222
Phone: 303-757-9922 FAX: 303-757-9390
Region 6 PED

Sheet Revisions		
Date	Description	Initials
mm/yy	XXXXXXXX	XXX

SEC. 32 & 33 T3S, R68W
SEC. 3-10, 15, 16 & 22, T4S, R68W of the 6TH P.M.,
CITY & COUNTY of DENVER, COLORADO

Farnsworth GROUP
8055 EAST TUFTS AVENUE, SUITE 850
DENVER, COLORADO 80237
(303) 692-8838 / (303) 692-0470 Fax
www.f-w.com

Land Survey Control Diagram
Plan Sheet
Project Number: IM 0252-394
Project Location: I-25 & ALAMEDA INTERCHANGE
Project Location: DENVER COLORADO

Project Code:	Last Mod. Date	Subset Sheets	Sheet No.
16311	03-06-09	5 of 6	3.05

PROJECT COORDINATES

POINT NUMBER	NAME	ID	NORTHING	EASTING	NAVD 88	DESCRIPTION
307	–	–	683595.996	957997.673	5213.88	RECOVERED ILLEGIBLE 3.25" ALUM. CAP IN RANGE BOX (SEE CDOT SURVEY)
525	TRANSPORTATION	AE5253	675291.658	977177.212	5447.96	FOUND STEEL ROD IN WELL
538	PT 26	–	677743.428	964086.533	5264.69	SHOWN FOR INFORMATION ONLY (SEE BM SURVEY)
545	MCDONNELL	KK2099	693860.656	959400.096	5208.80	FOUND STEEL ROD IN WELL
560	RUBY	AE5252	672212.633	957742.539	5392.54	FOUND 3.75" USGS BRASS CAP IN CONCRETE, 1936
561	–	–	680265.499	962014.765	5251.06	SHOWN FOR INFORMATION ONLY (SEE BM SURVEY)
562	MOE	AA7132	692889.739	946210.301	5340.51	FOUND 3.25" USGS BRASS CAP, 1994
563	LARRY	AE5255	661247.382	943932.157	5390.50	FOUND 3.5" USGS BRASS CAP, 1996
600	–	193797	679098.088	962637.184	5258.63	SHOWN FOR INFORMATION ONLY (SEE BM SURVEY)
601	–	194037	679231.116	961015.946	5238.19	SHOWN FOR INFORMATION ONLY (SEE BM SURVEY)
602	–	194043	681902.899	960024.587	5227.87	SHOWN FOR INFORMATION ONLY (SEE BM SURVEY)
603	–	194063	681545.968	961267.061	5248.80	SHOWN FOR INFORMATION ONLY (SEE BM SURVEY)
610	–	3.011004	676818.412	961779.226	5240.59	SET CDOT TYPE 2 MONUMENT – 3.25" ALUM. CAP (CAP STAMPED IMPROPERLY)
611	–	3.013006	675636.134	961357.154	5244.47	SET CDOT TYPE 2 MONUMENT – 3.25" ALUM. CAP (CAP STAMPED IMPROPERLY)
612	–	3.015004	674646.963	961971.667	5258.05	SET CDOT TYPE 2 MONUMENT – 3.25" ALUM. CAP (CAP STAMPED IMPROPERLY)
614	–	3.019004	671853.681	962086.162	5269.32	SET CDOT TYPE 2 MONUMENT – 3.25" ALUM. CAP (CAP STAMPED IMPROPERLY)
620	–	4.009024	689318.546	955073.769	5209.43	SET CDOT TYPE 2 MONUMENT – 3.25" ALUM. CAP
621	–	4.011024	690798.318	955353.369	5204.96	SET CDOT TYPE 2 MONUMENT – 3.25" ALUM. CAP
622	–	4.013023	691794.594	955652.191	5209.77	SET CDOT TYPE 2 MONUMENT – 3.25" ALUM. CAP
623	–	4.016023	693767.639	955460.086	5215.57	SET CDOT TYPE 2 MONUMENT – 3.25" ALUM. CAP
805	–	4.002018	685851.354	957308.663	5219.39	FOUND CDOT TYPE 2 MONUMENT – 3.25" ALUM. CAP (SEE MERRICK SURVEY)
809	FEDERAL	4.006029	687306.871	953140.098	5252.40	FOUND CDOT TYPE 2 MONUMENT – 3.25" ALUM. CAP (SEE FRAZIER, MERRICK & KM SURVEYS)
816	–	4.009023	689614.885	955427.778	5204.56	FOUND CDOT TYPE 2 MONUMENT – 3.25" ALUM. CAP (SEE MERRICK SURVEY)
825	DEPEW	4.006056	687217.977	943517.674	5384.21	FOUND CDOT TYPE 2 MONUMENT – 3.25" ALUM. CAP (SEE KM SURVEY)

Stan 10:02:43 AM K:\08276\16311\Phase 2\ROW_Survey\Drawings\16311SURV_PlanLSCD04.dgn

Colorado Department of Transportation
DOT
DEPARTMENT OF TRANSPORTATION
2000 South Holly
Denver, CO 80222
Phone: 303-757-9922 FAX: 303-757-9390
Region 6 PED

Sheet Revisions

Date	Description	Initials
mm/yy	XXXXXXXX	XXX

SEC. 32 & 33 T3S, R68W
SEC. 3-10, 15, 16 & 22, T4S, R68W of the 6TH P.M.,
CITY & COUNTY of DENVER, COLORADO

Farnsworth GROUP
8055 EAST TUFTS AVENUE, SUITE 850
DENVER, COLORADO 80237
(303) 692-8838 / (303) 692-0470 Fax
www.f-w.com

Land Survey Control Diagram
Plan Sheet
Project Number: IM 0252-394
Project Location: I-25 & ALAMEDA INTERCHANGE
Project Location: DENVER COLORADO

Project Code:	Last Mod. Date	Subset Sheets	Sheet No.
16311	03-06-09	4 of 6	3.04

NAD 83/92 COLORADO STATE PLANE CENTRAL ZONE

POINT NUMBER	LATITUDE (WGS 84)	LONGITUDE (WGS 84)	NORTHING (M)	EASTING (M)	HEIGHT (M)	ELEVATION (M)	CONVERGENCE	SCALE	NORTHING (USFT)	EASTING (USFT)	ELEVATION (USFT)
525	39° 41' 30.20295" N	104° 56' 17.89912" W	511250.530	962581.266	1643.389	1660.541	00° 21' 15.31790"	0.999988991	1677327.781	3158068.704	5447.96
545	39° 44' 34.68938" N	105° 00' 03.94511" W	516908.798	957164.209	1570.668	1587.645	00° 18' 52.75306"	0.999998617	1695891.615	3140296.242	5208.80
560	39° 41' 00.89450" N	105° 00' 26.65744" W	510312.252	956659.208	1626.789	1643.651	00° 18' 38.4286"	0.999998754	1674249.442	3138639.418	5392.54
562	39° 44' 25.77651" N	105° 02' 52.81292" W	516612.873	953145.028	1611.040	1627.791	00° 17' 06.2499"	0.999998133	1694920.734	3127109.978	5340.51
563	39° 39' 13.25681" N	105° 03' 23.93627" W	506970.906	952451.027	1626.463	1643.027	00° 16' 46.6207"	0.999982366	1663287.047	3124833.077	5390.50

PROJECT COORDINATES

POINT NUMBER	NAME	ID	NORTHING	EASTING	NAVD 88	DESCRIPTION
104	–	–	678541.674	961793.801	5237.08	SET CDOT TYPE2 W/ 3.25" ALUM. CAP "CDOT CP104" (SEE CDOT SURVEY)
105	–	–	679369.078	961310.552	5242.31	SET CDOT TYPE2 W/ 3.25" ALUM. CAP "CDOT CP105" (SEE CDOT SURVEY)
106	–	–	681051.141	960866.706	5227.55	SET CDOT TYPE2 W/ 3.25" ALUM. CAP "CDOT CP106" (SEE CDOT SURVEY)
107	–	–	681708.471	960500.336	5222.87	SET CDOT TYPE2 W/ 3.25" ALUM. CAP "CDOT CP107" (SEE CDOT SURVEY)
108	–	–	684617.162	958856.266	5235.19	SET CDOT TYPE2 W/ 3.25" ALUM. CAP "CDOT CP108" (SEE CDOT SURVEY)
109	–	–	683576.363	958994.068	5221.82	SET CDOT TYPE2 W/ 3.25" ALUM. CAP "CDOT CP109" IN RANGE BOX W/ "SURVEY" LID (SEE CDOT SUR
110	–	–	680371.500	960171.228	5231.90	SET CDOT TYPE2 W/ 3.25" ALUM. CAP "CDOT CP110" (SEE CDOT SURVEY)
111	–	–	679646.509	960679.916	5226.42	RECOVERED 3.25" ALUM. CAP "LAND CORNER CHICHESTER PLS7735 T4S R68W W1/4 E1/4 SEC15 SEC16
112	–	–	682287.537	960656.506	5225.11	RECOVERED "X" ON STONE IN RANGE BOX (SEE CDOT SURVEY)
200	–	–	679286.031	960971.074	5234.73	SET CDOT TYPE2 W/ 3.25" ALUM. CAP "CDOT CP200" (SEE CDOT SURVEY)
201	–	–	679430.437	961112.239	5233.55	SET CDOT TYPE2 W/ 3.25" ALUM. CAP "CDOT CP201" (SEE CDOT SURVEY)
202	–	–	679742.168	960930.214	5234.18	SET CDOT TYPE2 W/ 3.25" ALUM. CAP "CDOT CP202" (SEE CDOT SURVEY)
203	–	–	680008.684	961140.610	5234.94	SET CDOT TYPE2 W/ 3.25" ALUM. CAP "CDOT CP203" (SEE CDOT SURVEY)
204	–	–	680777.690	960629.364	5230.49	SET CDOT TYPE2 W/ 3.25" ALUM. CAP "CDOT CP204" (SEE CDOT SURVEY)
205	–	–	682519.257	960063.573	5236.76	SET CDOT TYPE2 W/ 3.25" ALUM. CAP "CDOT CP205" (SEE CDOT SURVEY)
206	–	–	682684.005	959763.606	5230.91	SET CDOT TYPE2 W/ 3.25" ALUM. CAP "CDOT CP206" (SEE CDOT SURVEY)
207	–	–	682094.241	960237.805	5225.38	SET CDOT TYPE2 W/ 3.25" ALUM. CAP "CDOT CP207" (SEE CDOT SURVEY)
208	–	–	682227.453	959875.389	5229.46	SET CDOT TYPE2 W/ 3.25" ALUM. CAP "CDOT CP208" (SEE CDOT SURVEY)
209	–	–	682130.687	959677.716	5226.89	SET CDOT TYPE2 W/ 3.25" ALUM. CAP "CDOT CP209" (SEE CDOT SURVEY)
210	–	–	682388.945	959581.235	5224.38	SET CDOT TYPE2 W/ 3.25" ALUM. CAP "CDOT CP210" (SEE CDOT SURVEY)
211	–	–	682390.120	959823.052	5228.61	SET CDOT TYPE2 W/ 3.25" ALUM. CAP "CDOT CP211" (SEE CDOT SURVEY)
212	–	–	679597.138	961359.299	5254.48	RECOVERED 2.5" ALUM. CAP "NOLTE CP212" (SEE CDOT SURVEY)
213	–	–	682939.117	959375.824	5222.16	SET CDOT TYPE5 W/ 3.25" ALUM. CAP "CDOT CP213" (SEE CDOT SURVEY)
214	–	–	679865.856	961096.849	5232.87	SET CDOT TYPE6 W/ 2" ALUM. CAP "CDOT CP214" (SEE CDOT SURVEY)
215	–	–	679894.761	960963.424	5232.46	SET CDOT TYPE6 2" ALUM. CAP "CDOT CP215" (SEE CDOT SURVEY)
216	–	–	680171.712	960657.171	5237.79	SET CDOT TYPE6 1.5" ALUM. CAP "CDOT 216" (SEE CDOT SURVEY)
217	–	–	682224.560	959693.692	5215.23	SET CDOT TYPE6 2" ALUM. CAP "CDOT CP217" (SEE CDOT SURVEY)
218	–	–	682367.368	959619.373	5216.29	SET CDOT TYPE6 2" ALUM. CAP "CDOT CP218" (SEE CDOT SURVEY)
219	–	–	682360.095	959528.880	5226.28	SET PK NAIL (SEE CDOT SURVEY)
220	–	–	682149.164	960027.816	5215.24	SET 3.25" ALUM. CAP "CDOT CP220" (SEE CDOT SURVEY)
221	–	–	682527.351	960007.583	5215.77	SET 3.25" ALUM. CAP "CDOT CP221" (SEE CDOT SURVEY)
222	–	–	682114.942	960204.371	5215.87	SET 3.25" ALUM. CAP "CDOT CP222" (SEE CDOT SURVEY)
223	–	–	680372.372	960089.882	5232.69	RECOVERED 2.5" ALUM. CAP "NOLTE CP 223" (SEE CDOT SURVEY)
224	–	–	679157.188	961132.945	5220.08	SET CUT "X" IN BOULDER (SEE CDOT SURVEY)
225	–	–	679314.733	960974.116	5226.27	SET CDOT TYPE6 1.5" ALUM. CAP "CDOT CP225" (SEE CDOT SURVEY)
226	–	–	680274.575	960372.650	5217.60	SET CUT "X" ON CONCRETE STEP (SEE CDOT SURVEY)
227	–	–	680050.860	960592.584	5216.34	SET CDOT TYPE6 1.5" ALUM. CAP "CDOT CP227" (SEE CDOT SURVEY)
228	–	–	682202.669	959708.329	5217.80	SET CDOT TYPE6 1.5" ALUM. CAP "CDOT CP228" (SEE CDOT SURVEY)
229	–	–	681490.533	960113.038	5225.77	SET CDOT TYPE6 1.5" ALUM. CAP "CDOT CP229" (SEE CDOT SURVEY)
230	–	–	681181.754	960232.656	5226.86	SET CDOT TYPE6 1.5" ALUM. CAP "CDOT CP230" (SEE CDOT SURVEY)
231	–	–	680999.963	960051.079	5227.46	SET CUT "X" ON CONCRETE BIKE PATH (SEE CDOT SURVEY)
232	–	–	683444.591	959193.535	5221.89	SET CDOT TYPE6 1.5" ALUM. CAP "CDOT CP232" (SEE CDOT SURVEY)
233	–	–	682540.619	959731.208	5226.40	SET CDOT TYPE6 2" ALUM. CAP "CDOT CP233" (SEE CDOT SURVEY)
234	–	–	682877.981	959618.884	5230.32	SET CDOT TYPE6 2" ALUM. CAP "CDOT CP234" (SEE CDOT SURVEY)
235	–	–	682960.593	959554.566	5212.64	SET CDOT TYPE6 2" ALUM. CAP "CDOT CP235" (SEE CDOT SURVEY)
236	–	–	683606.718	959321.770	5227.53	SET CDOT TYPE6 2" ALUM. CAP "CDOT CP236" (SEE CDOT SURVEY)
237	–	–	679660.005	962181.142	5250.15	SET CDOT TYPE6 2" ALUM. CAP "CDOT CP237" (SEE CDOT SURVEY)
238	–	–	679399.803	962123.026	5246.97	SET CDOT TYPE6 2" ALUM. CAP "CDOT CP238" (SEE CDOT SURVEY)
239	–	–	679865.058	961473.693	5241.17	SET CDOT TYPE6 2" ALUM. CAP "CDOT CP239" (SEE CDOT SURVEY)
240	–	–	683141.521	960215.761	5239.88	SET CDOT TYPE6 2" ALUM. CAP "CDOT CP240" (SEE CDOT SURVEY)
241	–	–	683006.168	959887.061	5241.56	SET CDOT TYPE6 2" ALUM. CAP "CDOT CP241" (SEE CDOT SURVEY)
242	–	–	682652.212	960420.487	5241.79	RECOVERED CUT "X" ON CONCRETE CURB RAMP (SEE CDOT SURVEY)
243	–	–	682721.684	960448.889	5242.68	RECOVERED 1" BROKEN ILLEGIBLE YELLOW PLASTIC CAP (SEE CDOT SURVEY)
244	–	–	681211.821	960745.132	5227.56	SET CDOT TYPE6 2" ALUM. CAP "CDOT CP244" (SEE CDOT SURVEY)
245	–	–	682857.920	959329.543	5220.65	RECOVERED 0.75" REBAR (SEE CDOT SURVEY)
246	–	–	682434.336	959328.913	5222.28	SET HINGE NAIL (SEE CDOT SURVEY)
247	–	–	682241.017	960716.714	5228.24	RECOVERED 2.0" ALUM. CAP "42" (SEE CDOT SURVEY)
248	–	–	682287.895	961014.975	5227.64	SET CDOT TPYE5S BRASS PLUG "CDOT CP248" (SEE CDOT SURVEY)
249	–	–	682053.390	960467.500	5226.33	SET HINGE NAIL (SEE CDOT SURVEY)
301	–	–	679639.748	958028.338	5294.32	RECOVERED AXLE IN RANGE BOX (SEE CDOT SURVEY)
302	–	–	679643.054	959352.143	5231.82	RECOVERED 2" ALUM. CAP "KURT O LINN INC E1/16 C– –C S16 2001 PLS14112" (SEE CDOT SURVEY)
303	–	–	679644.646	960015.031	5227.53	RECOVERED AXLE IN RANGE BOX (SEE CDOT SURVEY)
306	–	–	684922.101	959316.027	5235.22	RECOVERED 2.5" ALUM. CAP "AMERICAN WEST 1/16 S9 2001 LS27269" IN RANGE BOX (SEE CDOT SURV

Stan 10:02:14 AM K:\08276\16311\Phase 2\ROW_Survey\Drawings\16311SURV_PlanLSCD03.dgn

Colorado Department of Transportation
DOT
DEPARTMENT OF TRANSPORTATION
2000 South Holly
Denver, CO 80222
Phone: 303-757-9922 FAX: 303-757-9390
Region 6 PED

Sheet Revisions

Date	Description	Initials
mm/yy	XXXXXXXX	XXX

SEC. 32 & 33 T3S, R68W
SEC. 3-10, 15, 16 & 22, T4S, R68W of the 6TH P.M.,
CITY & COUNTY of DENVER, COLORADO

Farnsworth GROUP
ENGINEERS ARCHITECTS SURVEYORS SCIENTISTS
8055 EAST TUFTS AVENUE, SUITE 850
DENVER, COLORADO 80237
(303) 692-8838 / (303) 692-0470 Fax
www.f-w.com

Land Survey Control Diagram
Plan Sheet

Project Number: IM 0252-394
Project Location: I-25 & ALAMEDA INTERCHANGE
Project Location: DENVER COLORADO

Project Code:	Last Mod. Date	Subset Sheets	Sheet No.
16311	03-06-09	3 OF 6	3.03

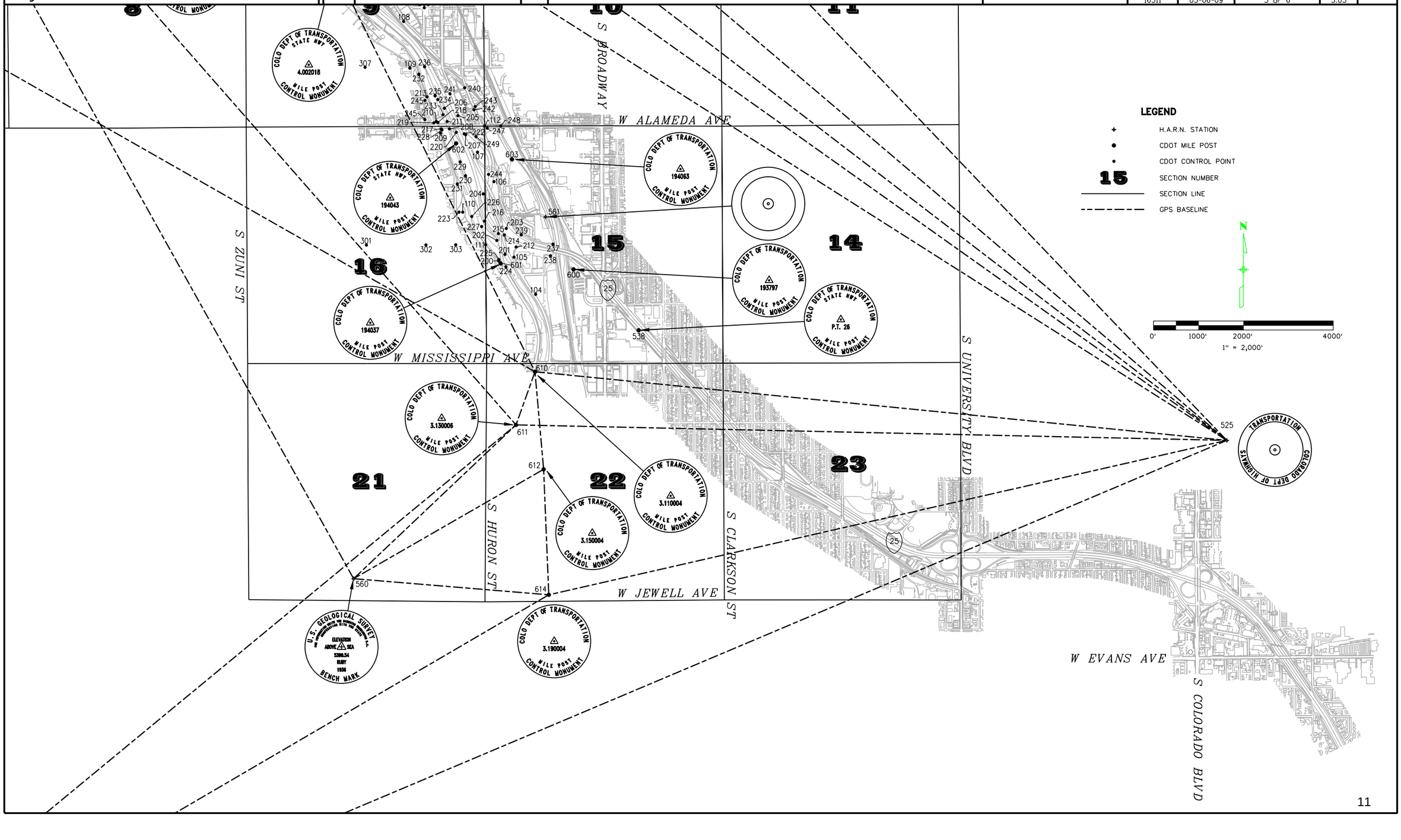

Sion 9:59:47 AM K:\08276\16311\Phase 2\ROW_Survey\Drawings\16311SURV_PlanLSCD02.dgn

Colorado Department of Transportation
DOT DEPARTMENT OF TRANSPORTATION
2000 South Holly
Denver, CO 80222
Phone: 303-757-9922 FAX: 303-757-9390
Region 6 PED

Sheet Revisions

Date	Description	Initials
mm/yy	XXXXXXXX	XXX

SEC. 32 & 33 T3S, R68W
SEC. 3-10, 15, 16 & 22, T4S, R68W of the 6TH P.M.,
CITY & COUNTY of DENVER, COLORADO

Farnsworth GROUP
ENGINEERS ARCHITECTS SURVEYORS SCIENTISTS
8055 EAST TUFTS AVENUE, SUITE 850
DENVER, COLORADO 80237
(303) 692-8838 / (303) 692-0470 Fax
www.f-w.com

Land Survey Control Diagram
Plan Sheet

Project Number: IM 0252-394
Project Location: I-25 & ALAMEDA INTERCHANGE
Project Location: DENVER COLORADO

Project Code:		Subset Sheets	Sheet No.	
16311	03-06-09	2 of 6	3.02	

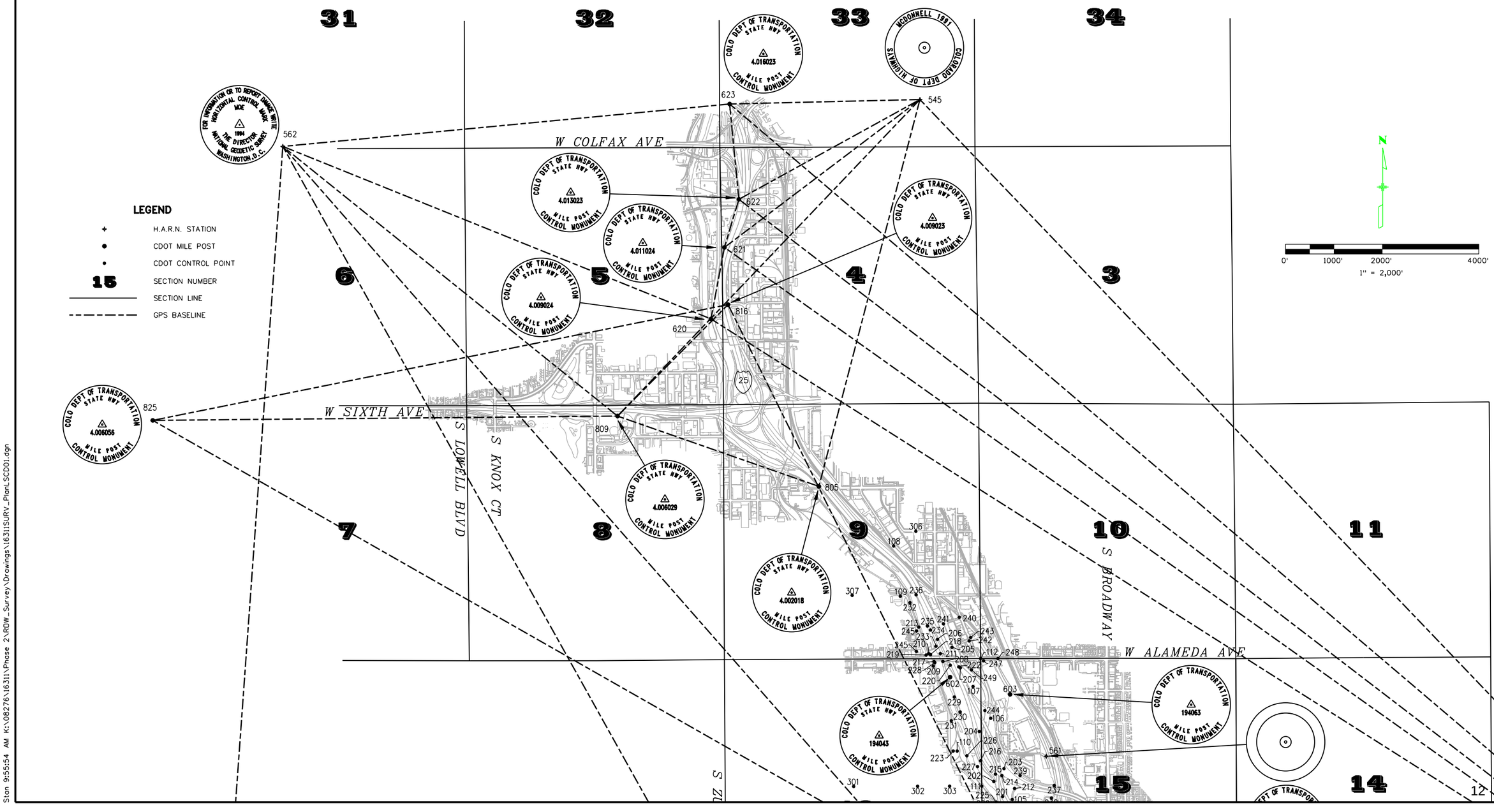

Stan 9:55:54 AM K:\08276\16311\Phase 2\ROW_Survey\Drawings\16311SURV_PlanLSCD01.dgn

Colorado Department of Transportation

2000 South Holly
Denver, CO 80222
Phone: 303-757-9922 FAX: 303-757-9390

Region 6 PED

Sheet Revisions

Date	Description	Initials
mm/yy	XXXXXXXX	XXX

SEC. 32 & 33 T3S, R68W
SEC. 3-10, 15, 16 & 22, T4S, R68W of the 6TH P.M.,
CITY & COUNTY of DENVER, COLORADO

Farnsworth GROUP
8055 EAST TUFTS AVENUE, SUITE 850
DENVER, COLORADO 80237
(303) 692-8838 / (303) 692-0470 Fax
www.f-w.com

Land Survey Control Diagram
Plan Sheet

Project Number: IM 0252-394
Project Location: I-25 & ALAMEDA INTERCHANGE
Project Location: DENVER COLORADO

Project Code:	Last Mod. Date	Subset Sheets	Sheet No.
16311	03-06-09	6 of 6	3.06

#623

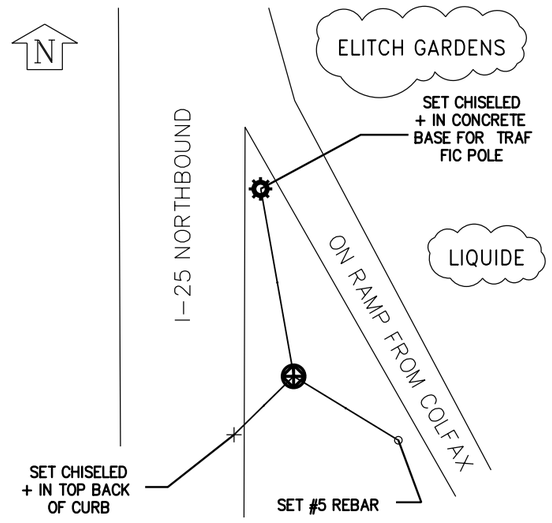

4.016023

#622

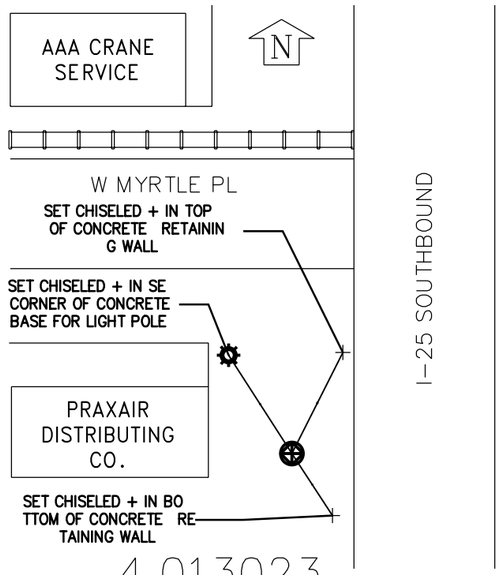

4.013023

#621

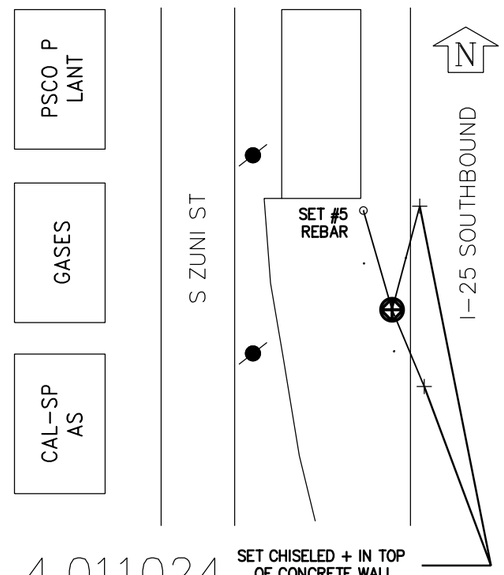

4.011024

#620

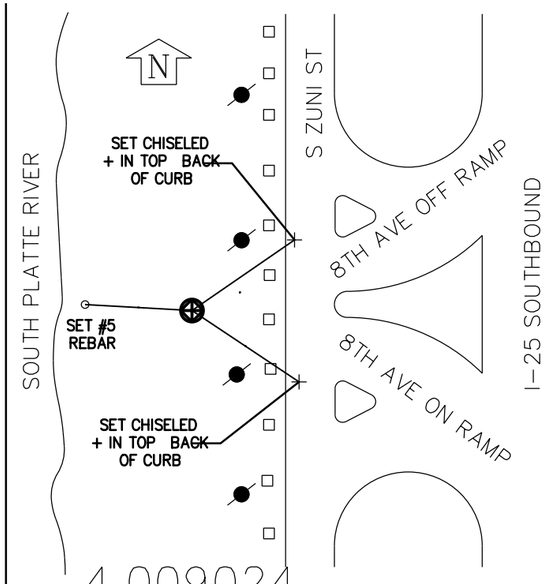

4.009024

#610

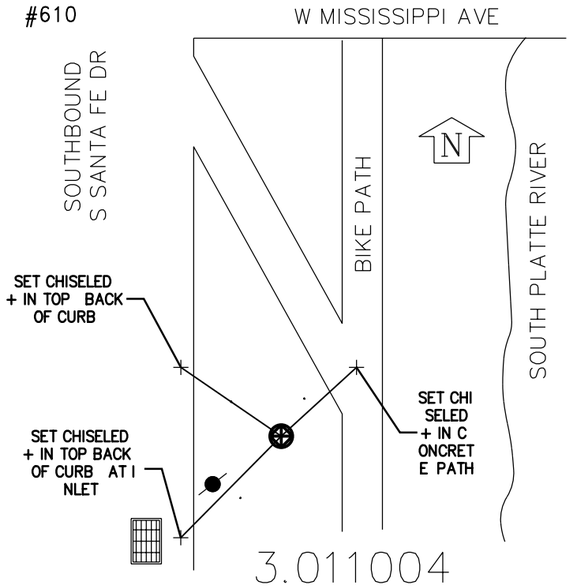

3.011004

#611

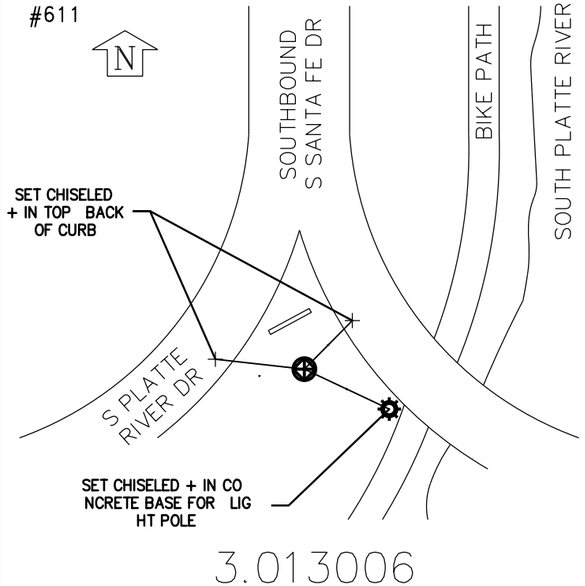

3.013006

#612

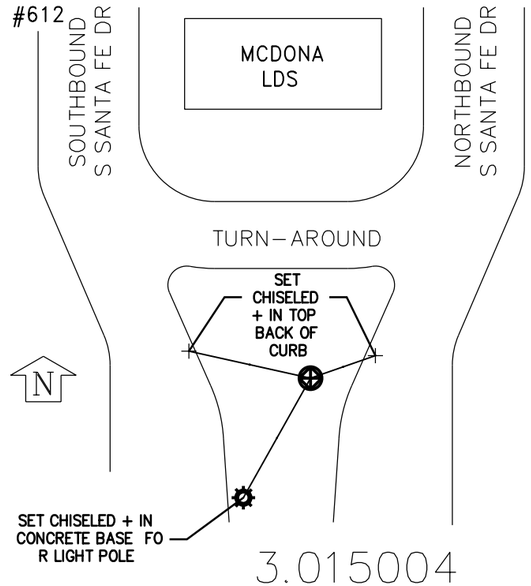

3.015004

#614

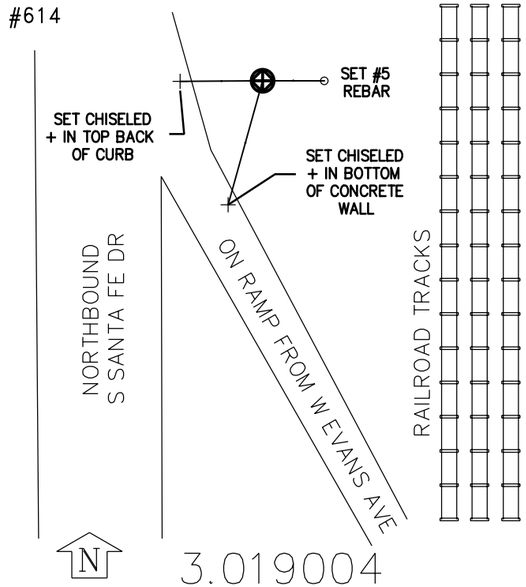

3.019004

Sun 10:03:38 AM K:\08276\16311\Phase 2\ROW_Survey\Drawings\16311SURV_PlanLSC005.dgn

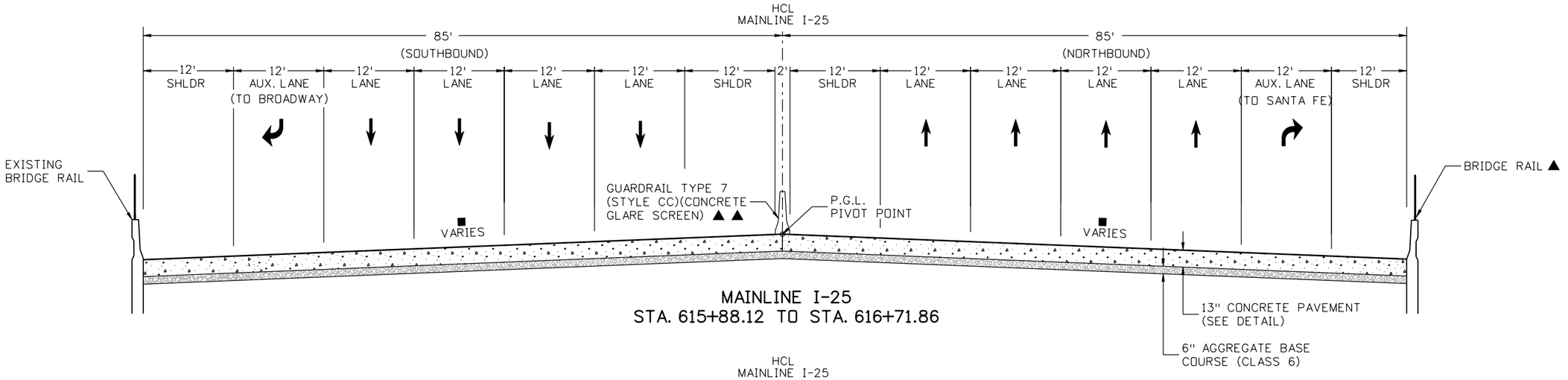

MAINLINE I-25
STA. 615+88.12 TO STA. 616+71.86

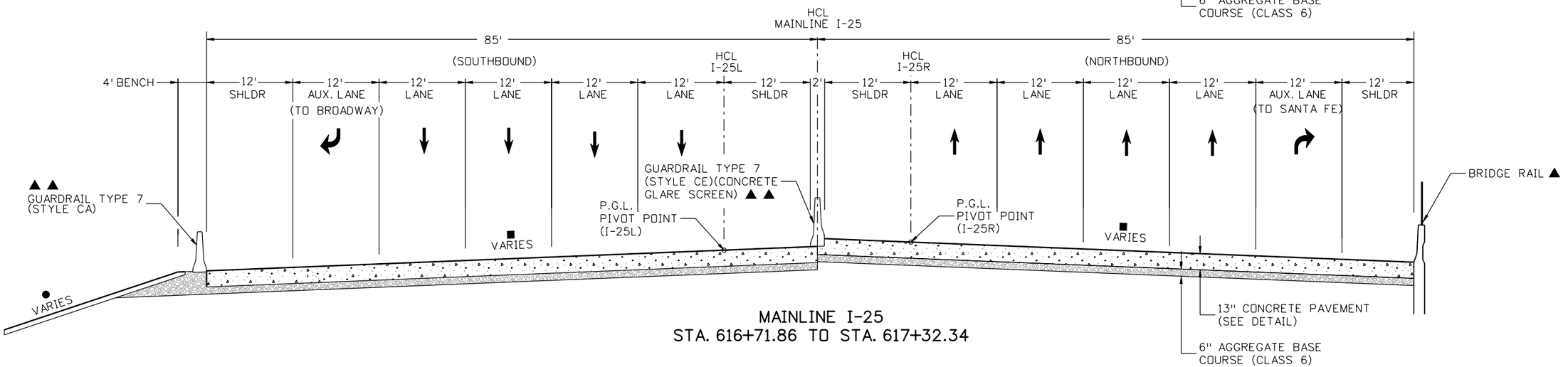

MAINLINE I-25
STA. 616+71.86 TO STA. 617+32.34

NOTES:

1.) BREAK POINTS ON SLOPES AND IN DITCH BOTTOMS SHALL BE ROUNDED DURING CONSTRUCTION FOR A PLEASING APPEARANCE.
2.) SEE GRADING PLANS FOR SLOPE TREATMENT.

● SEE GRADING PLANS FOR ADDITIONAL INFORMATION
■ SEE SUPERELEVATION TABLES AND ROADWAY PROFILES FOR CROSS SLOPE INFORMATION
▲ SEE RETAINING WALL PLANS
▲▲ SEE ROADWAY PLANS FOR LIMITS OF BARRIER

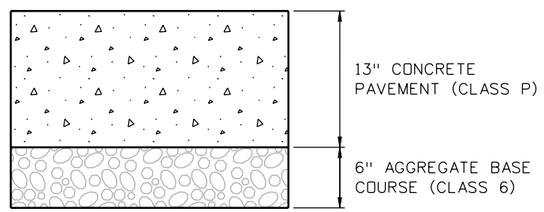

CONCRETE PAVEMENT DETAIL

Print Date: 9/27/2010	Sheet Revisions		
File Name: 16311DES_PH2_TypSec1.dgn	Date:	Comments	Init.
Horiz. Scale: NTS Vert. Scale: As Noted			
Unit Information Unit Leader Initials			
FELSBURG HOLT & ULLEVIG 6300 South Syracuse Way Centennial, CO 80111			

Colorado Department of Transportation
2000 South Holly Street
Denver, CO 80222
Phone: 303-972-9112 FAX: 303-972-9114
Region 6 RLB

As Constructed
No Revisions:
Revised:
Void:

I-25/SANTA FE INTERCHANGE
TYPICAL SECTION
MAINLINE I-25

Designer: SPG
Detailer: SYS
Sheet Subset: TYPICAL
Structure Numbers:
Subset Sheets: TY-1 of 18

Project No./Code
IM 0254-394
16311
Sheet Number 14

Stan 9:38:36 AM K:\08276\16311\Phase 2\Design\Drawings\16311DES_PH2_TypSec1.dgn
9/27/2010 CDOT-PDFDraftQuality_XM.pltcfg CDOT-PenTable.tbl

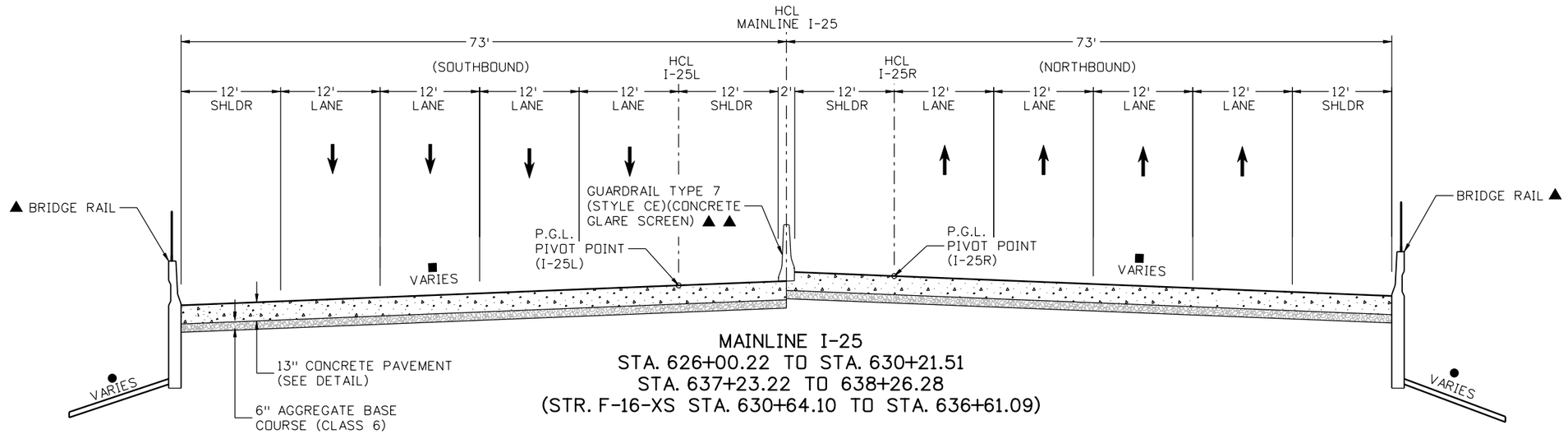

MAINLINE I-25
STA. 626+00.22 TO STA. 630+21.51
STA. 637+23.22 TO 638+26.28
(STR. F-16-XS STA. 630+64.10 TO STA. 636+61.09)

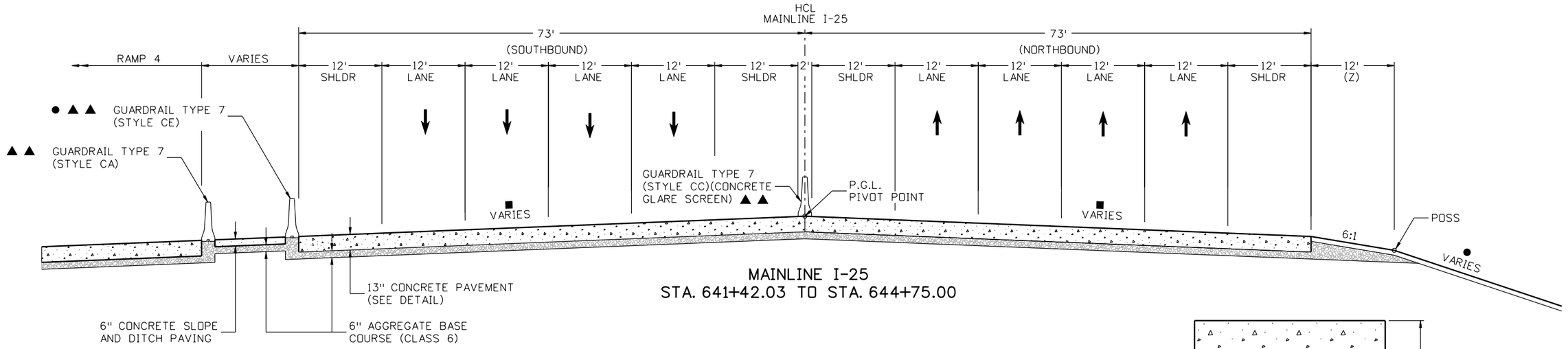

MAINLINE I-25
STA. 641+42.03 TO STA. 644+75.00

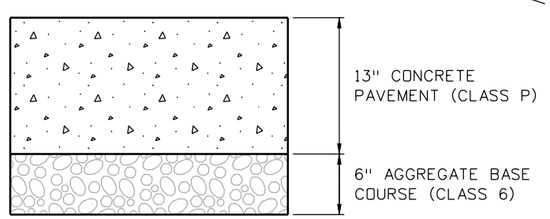

CONCRETE PAVEMENT DETAIL

NOTES:

1.) BREAK POINTS ON SLOPES AND IN DITCH BOTTOMS SHALL BE ROUNDED DURING CONSTRUCTION FOR A PLEASING APPEARANCE.
2.) SEE GRADING PLANS FOR SLOPE TREATMENT.

● SEE GRADING PLANS FOR ADDITIONAL INFORMATION
■ SEE SUPERELEVATION TABLES AND ROADWAY PROFILES FOR CROSS SLOPE INFORMATION
▲ SEE RETAINING WALL PLANS
▲▲ SEE ROADWAY PLANS FOR LIMITS OF BARRIER

Print Date: 9/27/2010	Sheet Revisions	Colorado Department of Transportation	As Constructed
File Name: 16311DES_PH2_TypSec2.dgn	Date: Comments: Init.	2000 South Holly Street, Denver, CO 80222	No Revisions:
Horiz. Scale: NTS Vert. Scale: As Noted		Phone: 303-972-9112 FAX: 303-972-9114	Revised:
Unit Information Unit Leader Initials		Region 6 RLB	Void:
FELSBURG HOLT & ULLEVIG 6300 South Syracuse Way Centennial, CO 80111			

I-25/SANTA FE INTERCHANGE TYPICAL SECTION MAINLINE I-25			Project No./Code
Designer: SPG	Structure Numbers		IM 0254-394
Detailer: SYS			16311
Sheet Subset: TYPICAL	Subset Sheets: TY-2 of 18		Sheet Number 15

Stan 9:38:39 AM K:\08276\16311\Phase 2\Design\Drawings\16311DES_PH2_TypSec2.dgn
9/27/2010 CDOT-PDFDraftQuality_XM.pltcfg CDOT-PenTable.tbl

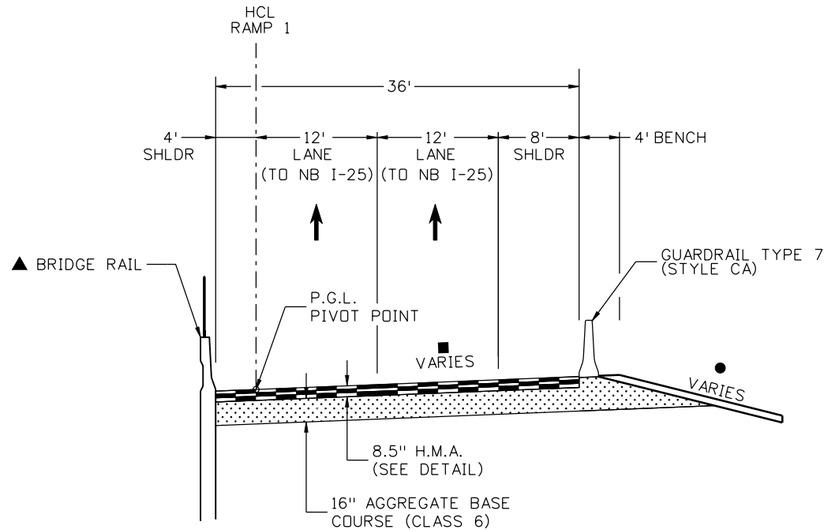

RAMP 1
STA. 109+91.34 TO STA. 111+61.45
(STR. NO. F-16-XR STA. 111+61.45 TO STA. 129+60.61)

NOTES:

1.) BREAK POINTS ON SLOPES AND IN DITCH BOTTOMS SHALL BE ROUNDED DURING CONSTRUCTION FOR A PLEASING APPEARANCE.
2.) SEE GRADING PLANS FOR SLOPE TREATMENT.

- ● SEE GRADING PLANS FOR ADDITIONAL INFORMATION
- ■ SEE SUPERELEVATION TABLES AND ROADWAY PROFILES FOR CROSS SLOPE INFORMATION
- ▲ SEE RETAINING WALL PLANS
- ▲▲ SEE ROADWAY PLANS FOR LIMITS OF BARRIER

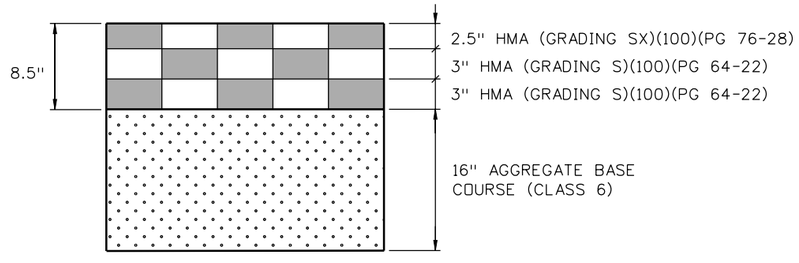

RAMP 1
HMA PAVEMENT DETAIL

Stan 9:38:43 AM K:\08276\16311\Phase 2\Design\Drawings\16311DES_PH2_TypSec3.dgn
9/27/2010 CDOT-PDFDraftQuality_XM.pltcfg CDOT-PenTable.tbl

Print Date: 9/27/2010	Sheet Revisions			Colorado Department of Transportation	As Constructed
File Name: 16311DES_PH2_TypSec3.dgn	Date:	Comments	Init.	2000 South Holly Street, Denver, CO 80222	No Revisions:
Horiz. Scale: NTS Vert. Scale: As Noted				Phone: 303-972-9112 FAX: 303-972-9114	Revised:
Unit Information Unit Leader Initials				Region 6 RLB	Void:
FELSBURG HOLT & ULLEVIG 6300 South Syracuse Way, Centennial, CO 80111, 25 years of engineering paths to transportation solutions					

I-25/SANTA FE INTERCHANGE TYPICAL SECTION RAMP 1			Project No./Code
			IM 0254-394
Designer: SPG	Structure Numbers		16311
Detailer: SYS			
Sheet Subset: TYPICAL	Subset Sheets: TY-3 of 18		Sheet Number 16

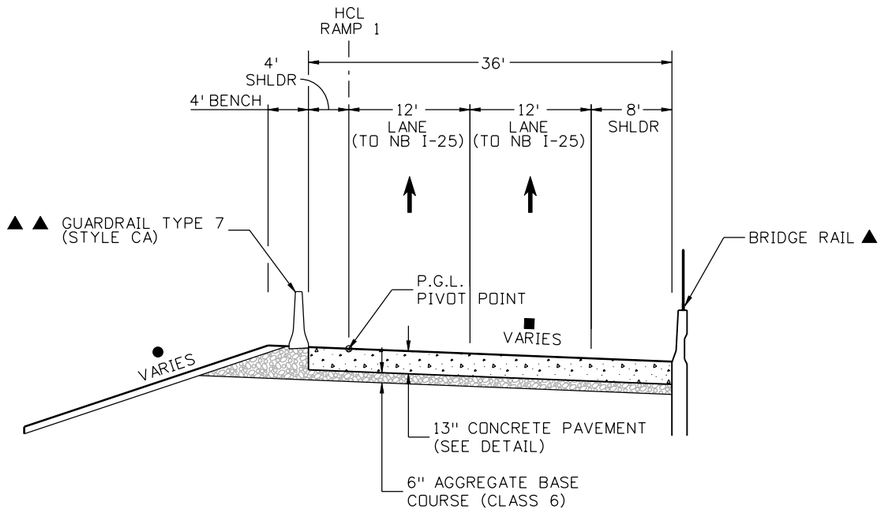

RAMP 1
STA. 130+54.11 TO STA. 131+91.17

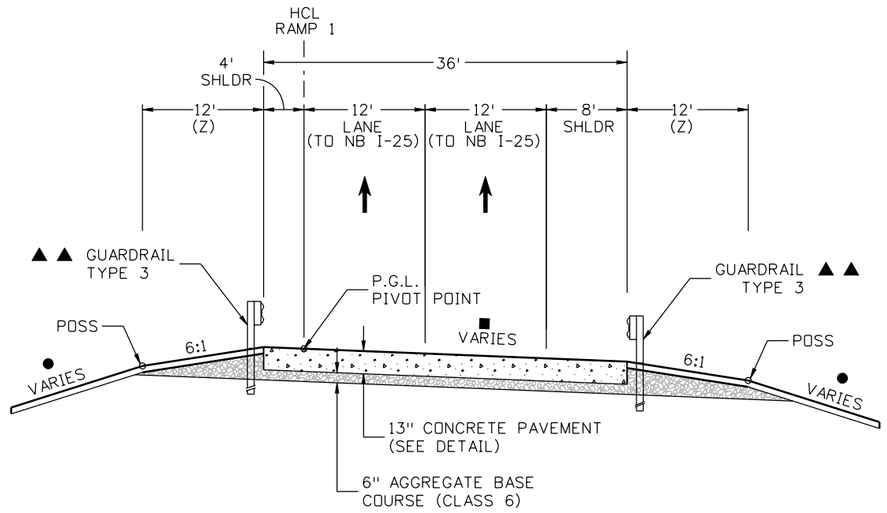

RAMP 1
STA. 132+40.00 TO STA. 134+40.00

NOTES:

1.) BREAK POINTS ON SLOPES AND IN DITCH BOTTOMS SHALL BE ROUNDED DURING CONSTRUCTION FOR A PLEASING APPEARANCE.
2.) SEE GRADING PLANS FOR SLOPE TREATMENT.

- ● SEE GRADING PLANS FOR ADDITIONAL INFORMATION
- ■ SEE SUPERELEVATION TABLES AND ROADWAY PROFILES FOR CROSS SLOPE INFORMATION
- ▲ SEE RETAINING WALL PLANS
- ▲▲ SEE ROADWAY PLANS FOR LIMITS OF BARRIER

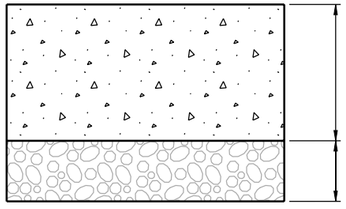

RAMP 1
CONCRETE PAVEMENT DETAIL

Print Date: 9/27/2010	Sheet Revisions			Colorado Department of Transportation	As Constructed
File Name: 16311DES_PH2_TypSec4.dgn	Date:	Comments	Init.	2000 South Holly Street	No Revisions:
Horiz. Scale: NTS Vert. Scale: As Noted				Denver, CO 80222	Revised:
Unit Information Unit Leader Initials				Phone: 303-972-9112 FAX: 303-972-9114	Void:
FELSBURG HOLT & ULLEVIG 6300 South Syracuse Way Centennial, CO 80111 25 years of engineering paths to transportation solutions				Region 6 RLB	

I-25/SANTA FE INTERCHANGE TYPICAL SECTION RAMP 1			Project No./Code
Designer: SPG	Structure Numbers		IM 0254-394
Detailer: SYS			16311
Sheet Subset: TYPICAL	Subset Sheets: TY-4 of 18		Sheet Number 17

Stan 9:38:46 AM K:\08276\16311\Phase 2\Design\Drawings\16311DES_PH2_TypSec4.dgn
9/27/2010 CDOT-PDFDraftQuality_XM.pltcfg CDOT-PenTable.tbl

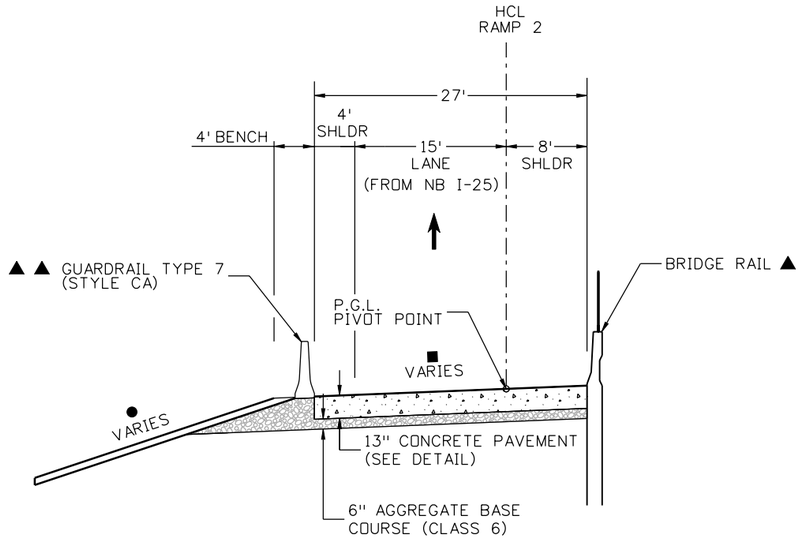

RAMP 2
STA. 205+30.96 TO STA. 206+69.53

NOTES:

1.) BREAK POINTS ON SLOPES AND IN DITCH BOTTOMS SHALL BE ROUNDED DURING CONSTRUCTION FOR A PLEASING APPEARANCE.
2.) SEE GRADING PLANS FOR SLOPE TREATMENT.

- ● SEE GRADING PLANS FOR ADDITIONAL INFORMATION
- ■ SEE SUPERELEVATION TABLES AND ROADWAY PROFILES FOR CROSS SLOPE INFORMATION
- ▲ SEE RETAINING WALL PLANS
- ▲▲ SEE ROADWAY PLANS FOR LIMITS OF BARRIER

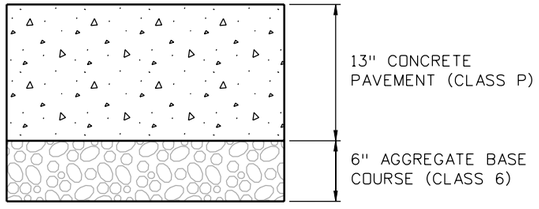

RAMP 2
CONCRETE PAVEMENT DETAIL

Print Date: 9/27/2010	Sheet Revisions	Colorado Department of Transportation	As Constructed
File Name: 16311DES_PH2_TypSec5.dgn	Date: / Comments / Init.	2000 South Holly Street, Denver, CO 80222	No Revisions:
Horiz. Scale: NTS Vert. Scale: As Noted		Phone: 303-972-9112 FAX: 303-972-9114	Revised:
Unit Information Unit Leader Initials		Region 6 RLB	Void:
FELSBURG HOLT & ULLEVIG 6300 South Syracuse Way, Centennial, CO 80111, 25 years of engineering paths to transportation solutions			

I-25/SANTA FE INTERCHANGE TYPICAL SECTION RAMP 2			Project No./Code
Designer: SPG	Structure Numbers		IM 0254-394
Detailer: SYS			16311
Sheet Subset: TYPICAL	Subset Sheets: TY-5 of 18		Sheet Number 18

Stan 9:38:49 AM K:\08276\16311\Phase 2\Design\Drawings\16311DES_PH2_TypSec5.dgn
9/27/2010 CDOT-PDFDraftQuality_XM.pltcfg CDOT-PenTable.tbl

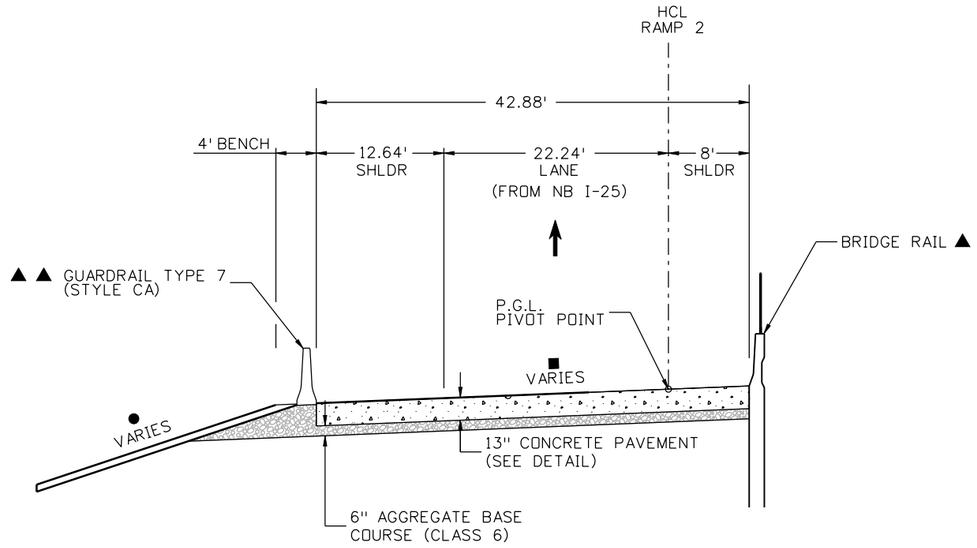

RAMP 2
STA. 208+00.00

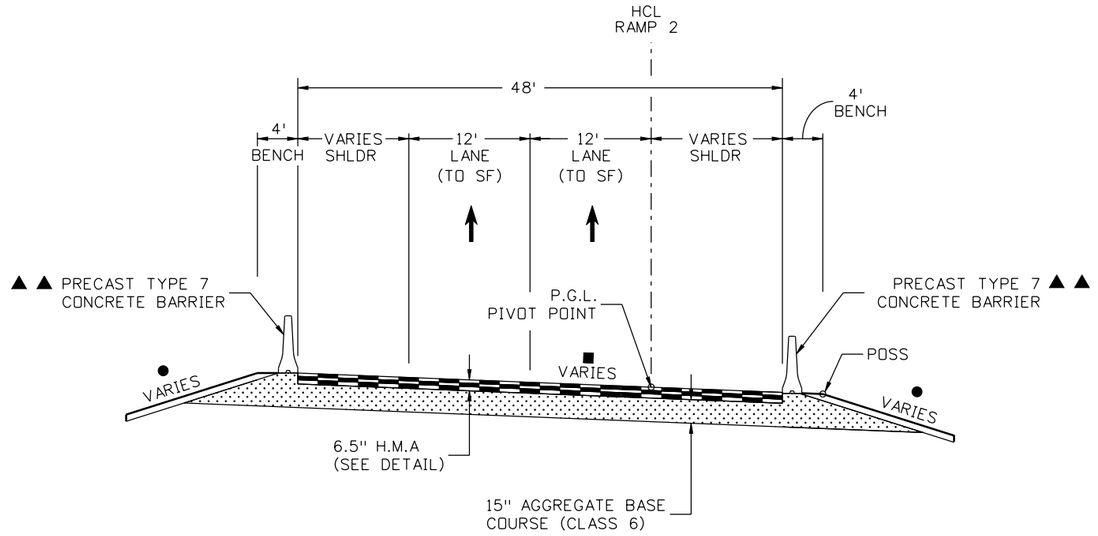

RAMP 2
STA. 208+43.95 TO STA. 208+96.50

NOTES:

1.) BREAK POINTS ON SLOPES AND IN DITCH BOTTOMS SHALL BE ROUNDED DURING CONSTRUCTION FOR A PLEASING APPEARANCE.
2.) SEE GRADING PLANS FOR SLOPE TREATMENT.

● SEE GRADING PLANS FOR ADDITIONAL INFORMATION
■ SEE SUPERELEVATION TABLES AND ROADWAY PROFILES FOR CROSS SLOPE INFORMATION
▲ SEE RETAINING WALL PLANS
▲ ▲ SEE ROADWAY PLANS FOR LIMITS OF BARRIER

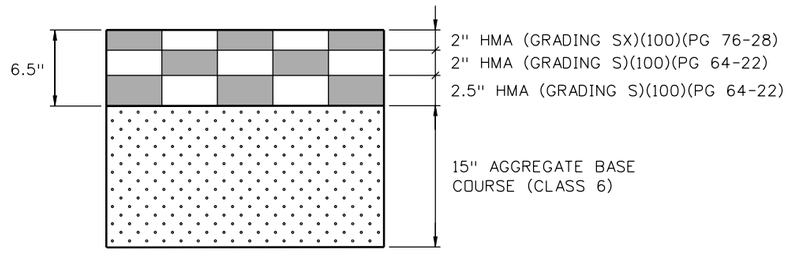

RAMP 2
HMA PAVEMENT DETAIL

Print Date: 9/27/2010
File Name: 16311DES_PH2_TypSec6.dgn
Horiz. Scale: NTS Vert. Scale: As Noted
Unit Information Unit Leader Initials

FELSBURG HOLT & ULLEVIG 6300 South Syracuse Way Centennial, CO 80111 25 years of engineering paths to transportation solutions

Sheet Revisions		
Date:	Comments	Init.

Colorado Department of Transportation
DOT DEPARTMENT OF TRANSPORTATION
2000 South Holly Street
Denver, CO 80222
Phone: 303-972-9112 FAX: 303-972-9114
Region 6 RLB

As Constructed
No Revisions:
Revised:
Void:

I-25/SANTA FE INTERCHANGE
TYPICAL SECTION
RAMP 2

Designer: SPG
Detailer: SYS
Sheet Subset: TYPICAL
Structure Numbers:
Subset Sheets: TY-6 of 18

Project No./Code
IM 0254-394
16311
Sheet Number 19

Stan 9:38:51 AM K:\08276\16311\Phase 2\Design\Drawings\16311DES_PH2_TypSec6.dgn
9/27/2010 CDOT-PDFDraftQuality_XM.pltcfg CDOT-PenTable.tbl

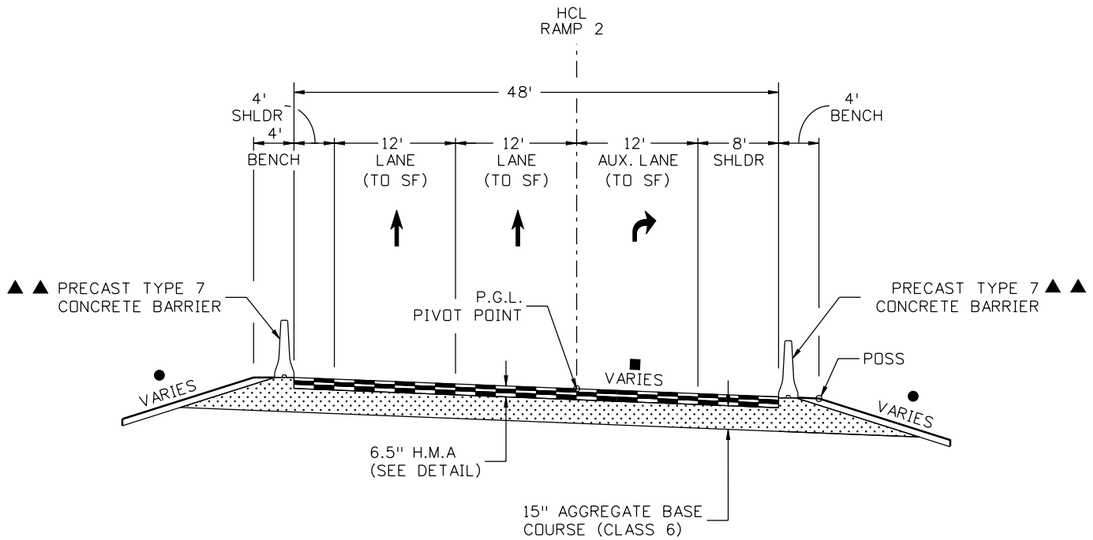

RAMP 2
STA. 210+74.24 TO STA. 212+66.96

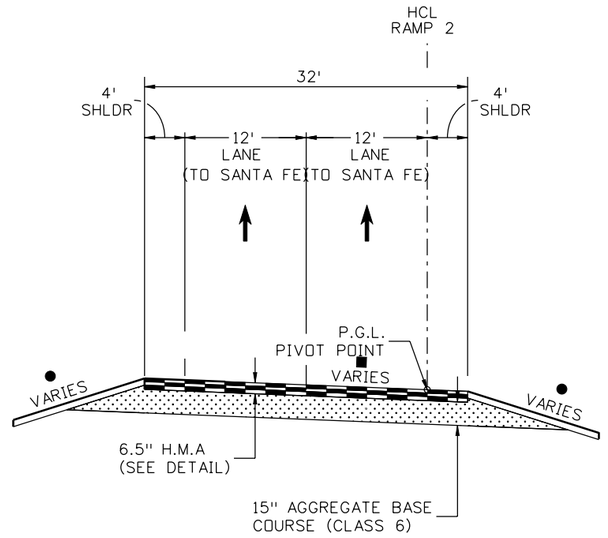

RAMP 2
STA. 214+38.95 TO STA. 215+88.44

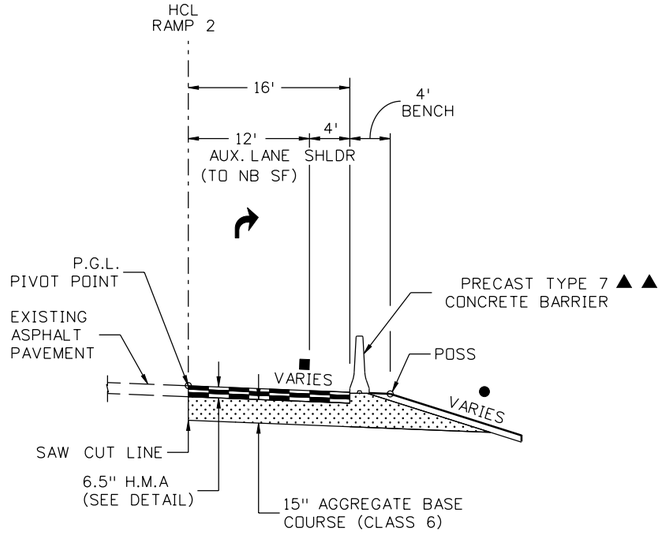

RAMP 2
STA. 217+21.63 TO STA. 219+04.88

NOTES:

1.) BREAK POINTS ON SLOPES AND IN DITCH BOTTOMS SHALL BE ROUNDED DURING CONSTRUCTION FOR A PLEASING APPEARANCE.
2.) SEE GRADING PLANS FOR SLOPE TREATMENT.

- ● SEE GRADING PLANS FOR ADDITIONAL INFORMATION
- ■ SEE SUPERELEVATION TABLES AND ROADWAY PROFILES FOR CROSS SLOPE INFORMATION
- ▲ SEE RETAINING WALL PLANS
- ▲▲ SEE ROADWAY PLANS FOR LIMITS OF BARRIER

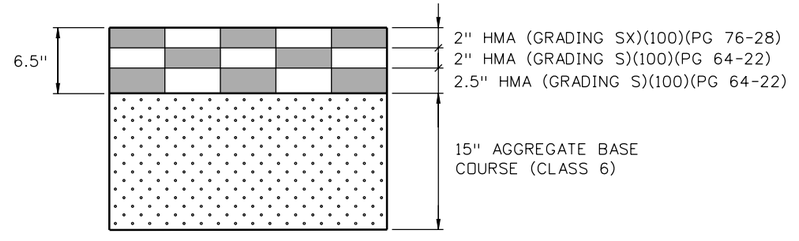

RAMP 2
HMA PAVEMENT DETAIL

Print Date: 9/27/2010	Sheet Revisions	Colorado Department of Transportation	As Constructed
File Name: 16311DES_PH2_TypSec7.dgn	Date: Comments: Init.	2000 South Holly Street, Denver, CO 80222	No Revisions:
Horiz. Scale: NTS Vert. Scale: As Noted		Phone: 303-972-9112 FAX: 303-972-9114	Revised:
Unit Information Unit Leader Initials		Region 6 RLB	Void:
FELSBURG HOLT & ULLEVIG 6300 South Syracuse Way, Centennial, CO 80111, 25 years of engineering paths to transportation solutions			

I-25/SANTA FE INTERCHANGE TYPICAL SECTION RAMP 2			Project No./Code
Designer: SPG	Structure Numbers		IM 0254-394
Detailer: SYS			16311
Sheet Subset: TYPICAL	Subset Sheets: TY-7 of 18		Sheet Number 20

Stan 9:38:54 AM K:\08276\16311\Phase 2\Design\Drawings\16311DES_PH2_TypSec7.dgn
9/27/2010 CDOT-PDFDraftQuality_XM.pltcfg CDOT-PenTable.tbl

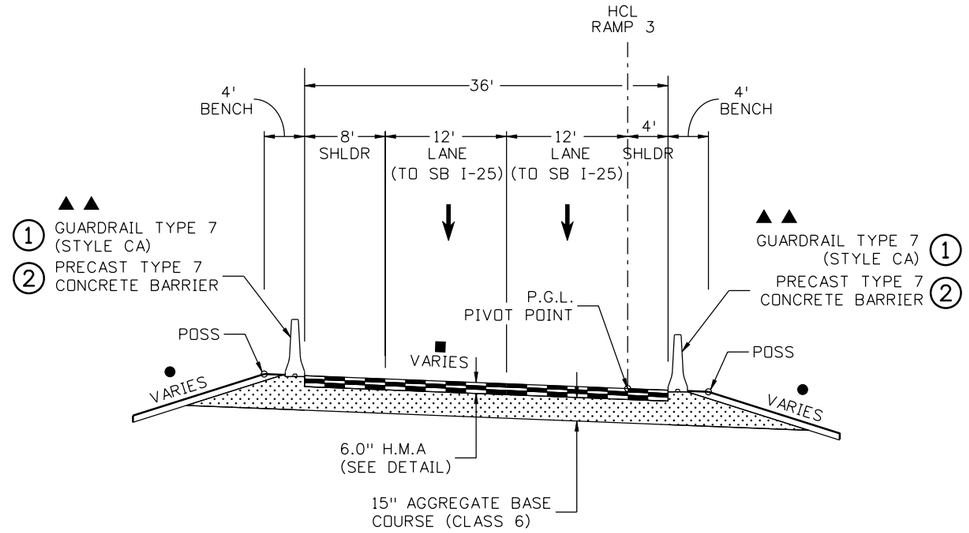

RAMP 3
STA. 303+02.72 TO STA. 306+09.95 (1)
STA. 306+09.95 TO STA. 307+94.37 (2)

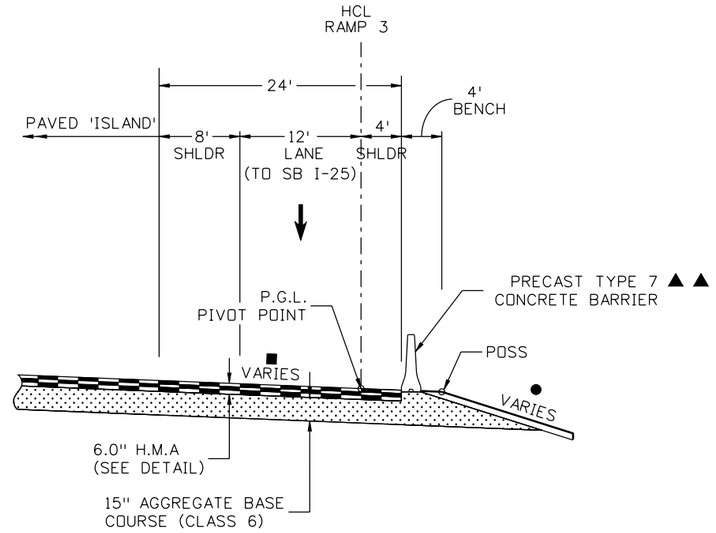

RAMP 3
STA. 308+33.13 TO STA. 309+57.61

NOTES:

1.) BREAK POINTS ON SLOPES AND IN DITCH BOTTOMS SHALL BE ROUNDED DURING CONSTRUCTION FOR A PLEASING APPEARANCE.
2.) SEE GRADING PLANS FOR SLOPE TREATMENT.

- ● SEE GRADING PLANS FOR ADDITIONAL INFORMATION
- ■ SEE SUPERELEVATION TABLES AND ROADWAY PROFILES FOR CROSS SLOPE INFORMATION
- ▲ SEE RETAINING WALL PLANS
- ▲▲ SEE ROADWAY PLANS FOR LIMITS OF BARRIER

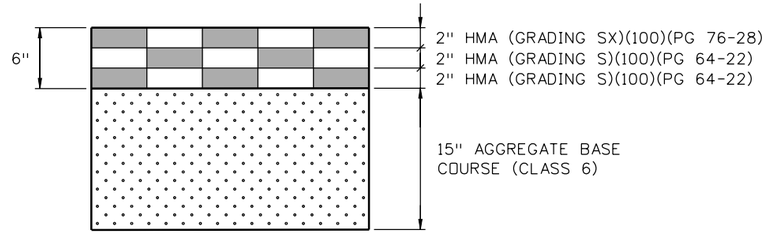

RAMP 3
HMA PAVEMENT DETAIL

Print Date: 9/27/2010		Sheet Revisions			Colorado Department of Transportation	As Constructed
File Name: 16311DES_PH2_TypSec8.dgn		Date:	Comments	Init.	2000 South Holly Street Denver, CO 80222 Phone: 303-972-9112 FAX: 303-972-9114	No Revisions:
Horiz. Scale: NTS Vert. Scale: As Noted					Region 6 RLB	Revised:
Unit Information Unit Leader Initials						Void:
FELSBURG HOLT & ULLEVIG 6300 South Syracuse Way Centennial, CO 80111 25 years of engineering paths to transportation solutions						

I-25/SANTA FE INTERCHANGE TYPICAL SECTION RAMP 3			Project No./Code
Designer: SPG	Structure Numbers		IM 0254-394
Detailer: SYS			16311
Sheet Subset: TYPICAL	Subset Sheets: TY-8 of 18		Sheet Number 21

Stan 9:38:57 AM K:\08276\16311\Phase 2\Design\Drawings\16311DES_PH2_TypSec8.dgn
9/27/2010 CDOT-PDFDraftQuality_XM.pltcfg CDOT-PenTable.tbl

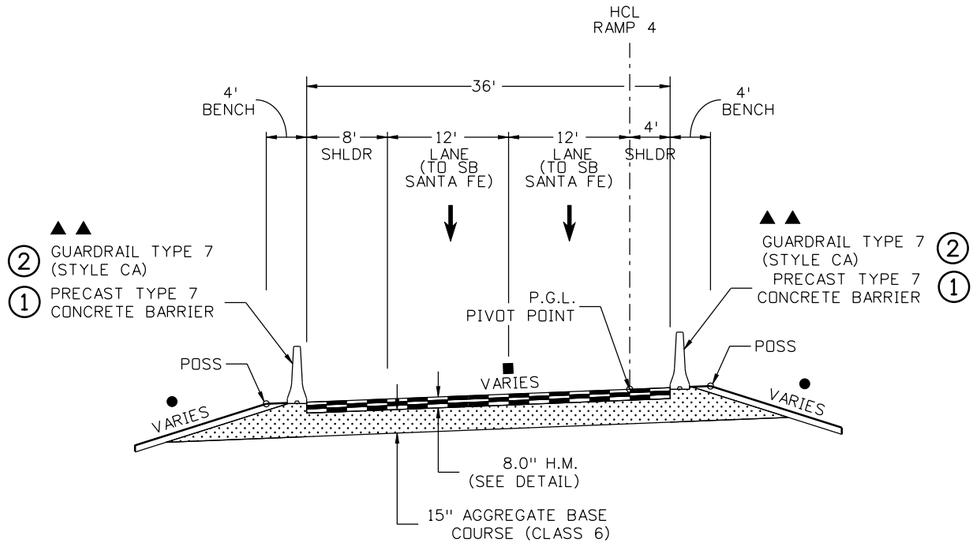

RAMP 4
① STA. 404+27.16 TO STA. 411+27.94
② STA. 411+27.94 TO STA. 412+62.44

NOTES:

1.) BREAK POINTS ON SLOPES AND IN DITCH BOTTOMS SHALL BE ROUNDED DURING CONSTRUCTION FOR A PLEASING APPEARANCE.
2.) SEE GRADING PLANS FOR SLOPE TREATMENT.

- ● SEE GRADING PLANS FOR ADDITIONAL INFORMATION
- ■ SEE SUPERELEVATION TABLES AND ROADWAY PROFILES FOR CROSS SLOPE INFORMATION
- ▲ SEE RETAINING WALL PLANS
- ▲▲ SEE ROADWAY PLANS FOR LIMITS OF BARRIER

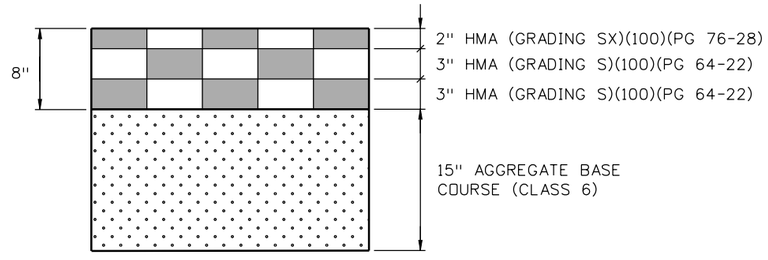

RAMP 4
HMA PAVEMENT DETAIL

Print Date: 9/27/2010	Sheet Revisions	Colorado Department of Transportation	As Constructed
File Name: 16311DES_PH2_TypSec9.dgn	Date: / Comments / Init.	2000 South Holly Street, Denver, CO 80222	No Revisions:
Horiz. Scale: NTS Vert. Scale: As Noted		Phone: 303-972-9112 FAX: 303-972-9114	Revised:
Unit Information Unit Leader Initials		Region 6 RLB	Void:
FELSBURG HOLT & ULLEVIG 6300 South Syracuse Way, Centennial, CO 80111, 25 years of engineering paths to transportation solutions			

I-25/SANTA FE INTERCHANGE TYPICAL SECTION RAMP 4			Project No./Code
Designer: SPG	Structure Numbers		IM 0254-394
Detailer: SYS			16311
Sheet Subset: TYPICAL	Subset Sheets: TY-9 of 18		Sheet Number 22

Stan 9:39:00 AM K:\08276\16311\Phase 2\Design\Drawings\16311DES_PH2_TypSec9.dgn
9/27/2010 CDOT-PDFDraftQuality_XM.pltcfg CDOT-PenTable.tbl

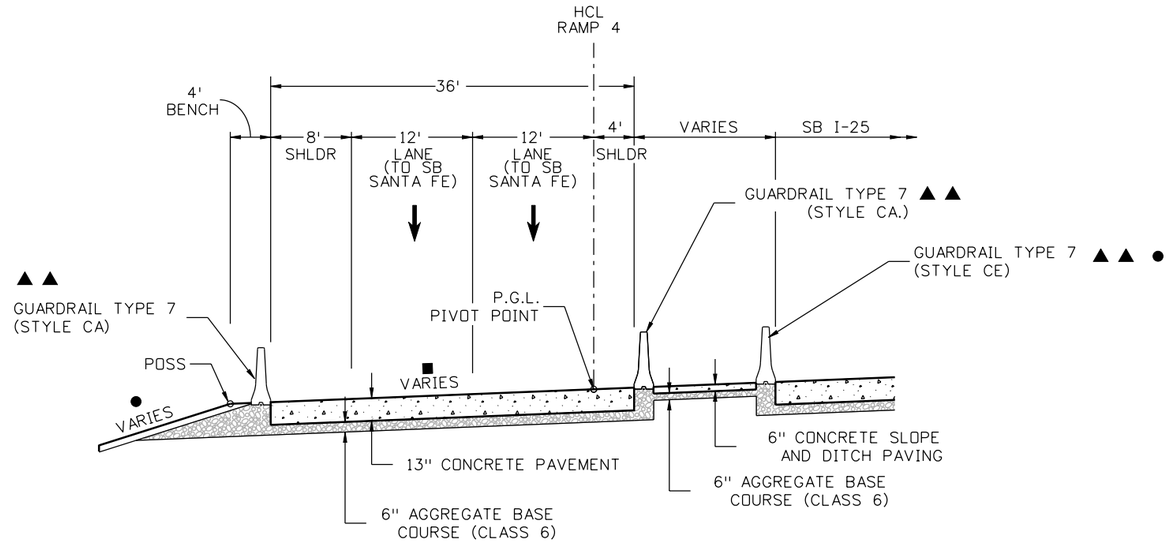

RAMP 4
STA. 412+62.44 TO STA. 415+91.51

NOTES:

1.) BREAK POINTS ON SLOPES AND IN DITCH BOTTOMS SHALL BE ROUNDED DURING CONSTRUCTION FOR A PLEASING APPEARANCE.
2.) SEE GRADING PLANS FOR SLOPE TREATMENT.

- ● SEE GRADING PLANS FOR ADDITIONAL INFORMATION
- ■ SEE SUPERELEVATION TABLES AND ROADWAY PROFILES FOR CROSS SLOPE INFORMATION
- ▲ SEE RETAINING WALL PLANS
- ▲ ▲ SEE ROADWAY PLANS FOR LIMITS OF BARRIER

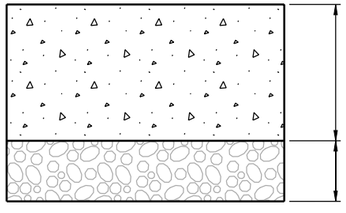

RAMP 4
CONCRETE PAVEMENT DETAIL

Print Date: 9/27/2010	Sheet Revisions	Colorado Department of Transportation	As Constructed
File Name: 16311DES_PH2_TypSec10.dgn	Date: / Comments / Init.	2000 South Holly Street, Denver, CO 80222	No Revisions:
Horiz. Scale: NTS Vert. Scale: As Noted		Phone: 303-972-9112 FAX: 303-972-9114	Revised:
Unit Information Unit Leader Initials		Region 6 RLB	Void:
FELSBURG HOLT & ULLEVIG 6300 South Syracuse Way, Centennial, CO 80111, 25 years of engineering paths to transportation solutions			

I-25/SANTA FE INTERCHANGE TYPICAL SECTION RAMP 4			Project No./Code
Designer: SPG	Structure Numbers		IM 0254-394
Detailer: SYS			16311
Sheet Subset: TYPICAL	Subset Sheets: TY-10 of 18		Sheet Number 23

Stan 9:39:02 AM K:\08276\16311\Phase 2\Design\Drawings\16311DES_PH2_TypSec10.dgn
9/27/2010 CDOT-PDFDraftQuality_XM.pltcfg CDOT-PenTable.tbl

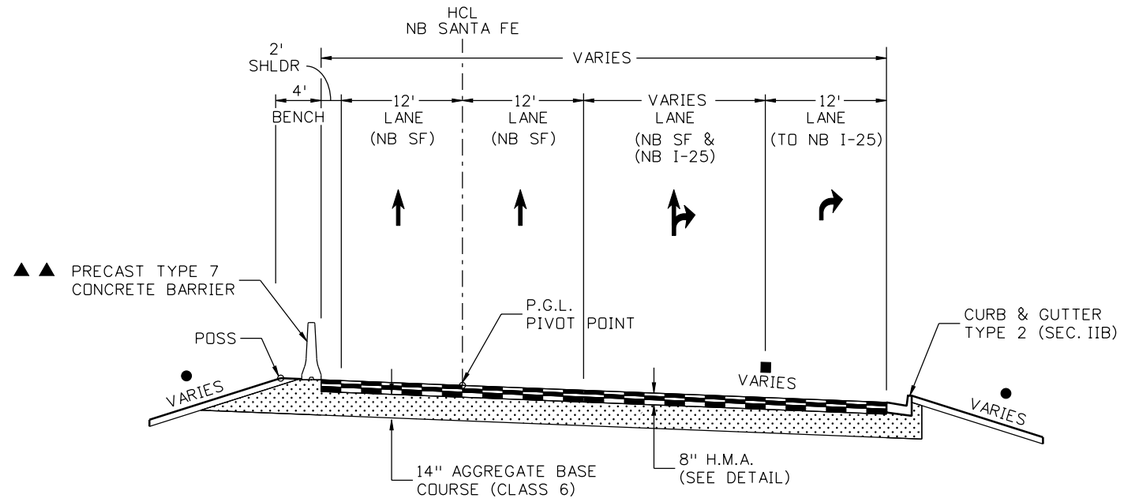

NB SANTA FE
STA. 712+52.70 TO STA. 713+59.98

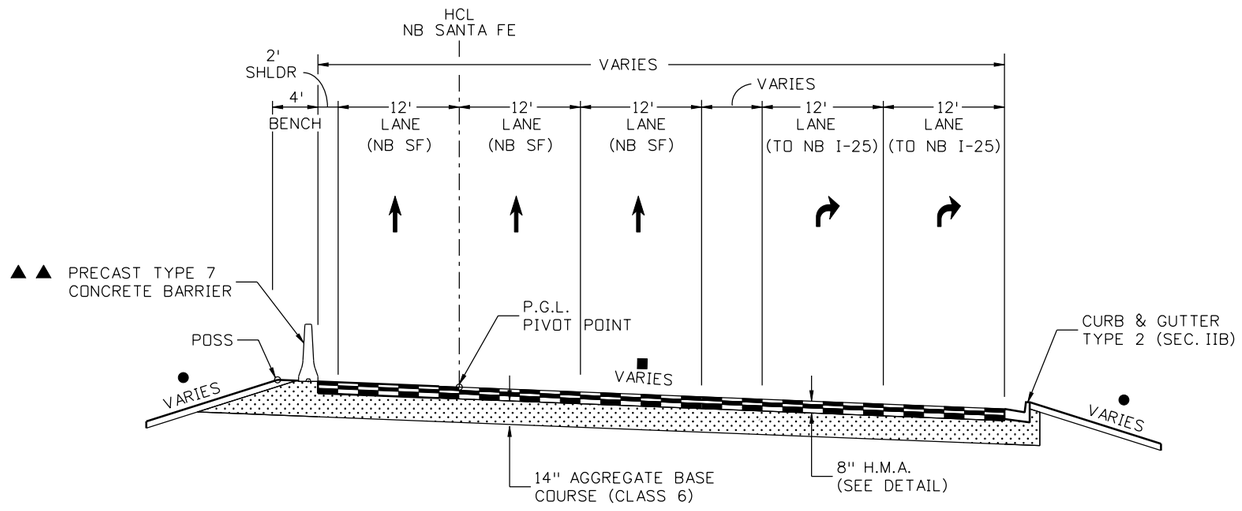

NB SANTA FE
STA. 713+59.98 TO STA. 714+50.00

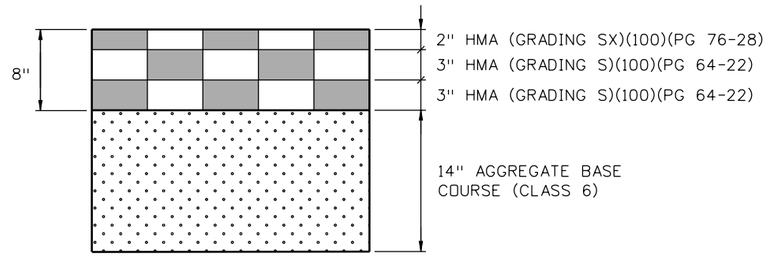

SANTA FE
HMA PAVEMENT DETAIL

NOTES:

1.) BREAK POINTS ON SLOPES AND IN DITCH BOTTOMS SHALL BE ROUNDED DURING CONSTRUCTION FOR A PLEASING APPEARANCE.
2.) SEE GRADING PLANS FOR SLOPE TREATMENT.

- ● SEE GRADING PLANS FOR ADDITIONAL INFORMATION
- ■ SEE SUPERELEVATION TABLES AND ROADWAY PROFILES FOR CROSS SLOPE INFORMATION
- ▲ SEE RETAINING WALL PLANS
- ▲▲ SEE ROADWAY PLANS FOR LIMITS OF BARRIER

Print Date: 9/27/2010
File Name: 16311DES_PH2_TypSec11.dgn
Horiz. Scale: NTS Vert. Scale: As Noted
Unit Information Unit Leader Initials

FELSBURG HOLT & ULLEVIG 6300 South Syracuse Way Centennial, CO 80111 25 years of engineering paths to transportation solutions

Sheet Revisions		
Date:	Comments	Init.

Colorado Department of Transportation
2000 South Holly Street
Denver, CO 80222
Phone: 303-972-9112 FAX: 303-972-9114
Region 6 RLB

As Constructed
No Revisions:
Revised:
Void:

I-25/SANTA FE INTERCHANGE
TYPICAL SECTION
NB SANTA FE

Designer: SPG
Detailer: SYS
Sheet Subset: TYPICAL
Structure Numbers:
Subset Sheets: TY-11 of 18

Project No./Code
IM 0254-394
16311
Sheet Number 24

Stan 9:39:06 AM K:\08276\16311\Phase 2\Design\Drawings\16311DES_PH2_TypSec11.dgn
9/27/2010 CDOT-PDFDraftQuality_XM.pltcfg CDOT-PenTable.tbl

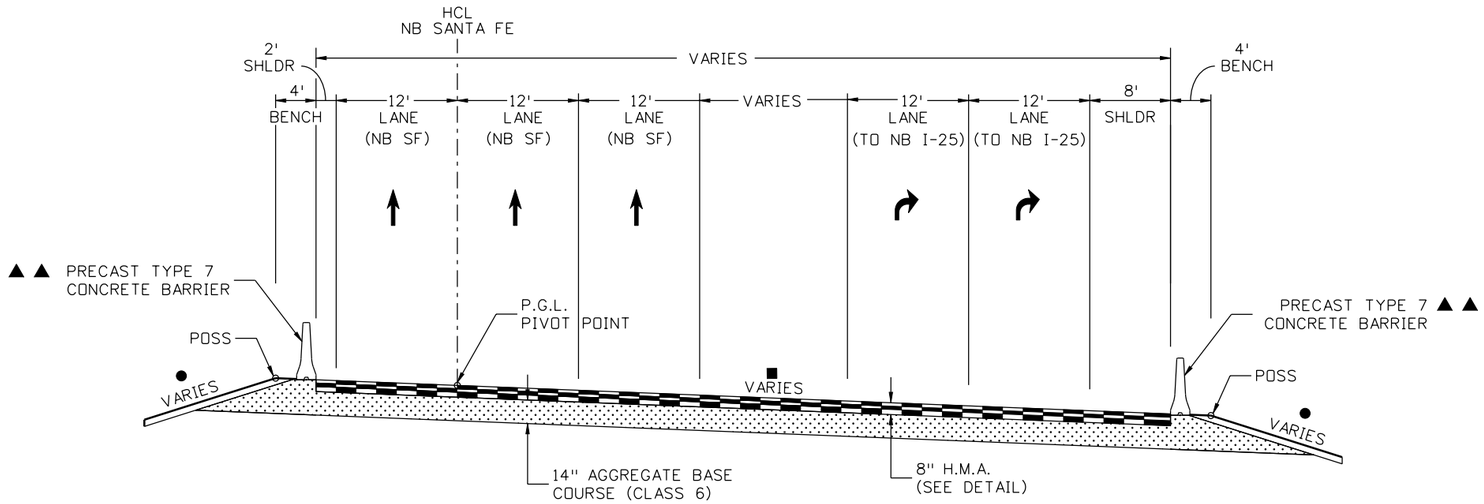

NB SANTA FE
STA. 714+68.75 TO STA. 716+45.67

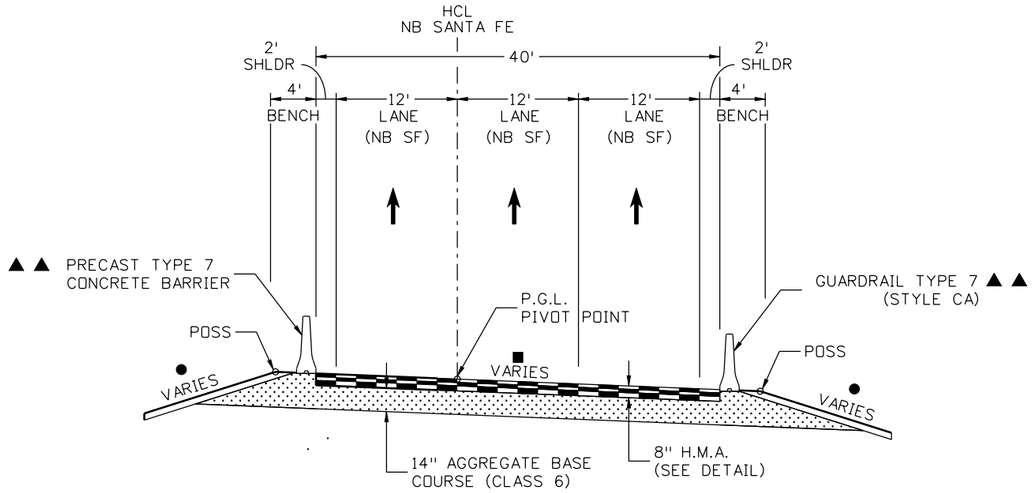

NB SANTA FE
STA. 717+02.13 TO STA. 719+49.18

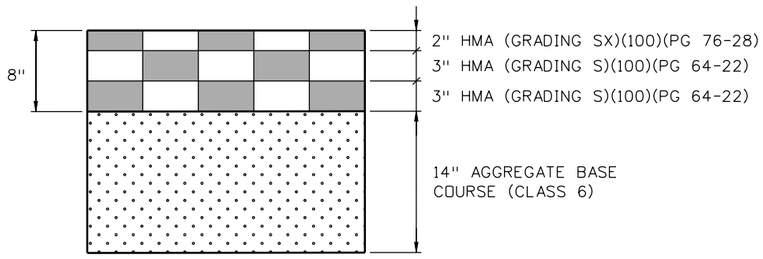

SANTA FE
HMA PAVEMENT DETAIL

NOTES:

1.) BREAK POINTS ON SLOPES AND IN DITCH BOTTOMS SHALL BE ROUNDED DURING CONSTRUCTION FOR A PLEASING APPEARANCE.
2.) SEE GRADING PLANS FOR SLOPE TREATMENT.

- ● SEE GRADING PLANS FOR ADDITIONAL INFORMATION
- ■ SEE SUPERELEVATION TABLES AND ROADWAY PROFILES FOR CROSS SLOPE INFORMATION
- ▲ SEE RETAINING WALL PLANS
- ▲▲ SEE ROADWAY PLANS FOR LIMITS OF BARRIER

Print Date: 9/27/2010	Sheet Revisions			Colorado Department of Transportation	As Constructed	I-25/SANTA FE INTERCHANGE TYPICAL SECTION NB SANTA FE	Project No./Code
File Name: 16311DES_PH2_TypSec12.dgn	Date:	Comments	Init.	2000 South Holly Street Denver, CO 80222 Phone: 303-972-9112 FAX: 303-972-9114	No Revisions:	Designer: SPG / Structure Numbers:	IM 0254-394
Horiz. Scale: NTS Vert. Scale: As Noted				Region 6 RLB	Revised:	Detailer: SYS /	16311
Unit Information Unit Leader Initials					Void:	Sheet Subset: TYPICAL / Subset Sheets: TY-12 of 18	Sheet Number 25
FELSBURG HOLT & ULLEVIG 6300 South Syracuse Way Centennial, CO 80111 25 years of engineering paths to transportation solutions							

Stan 9:39:09 AM K:\08276\16311\Phase 2\Design\Drawings\16311DES_PH2_TypSec12.dgn
9/27/2010 CDOT-PDFDraftQuality_XM.pltcfg CDOT-PenTable.tbl

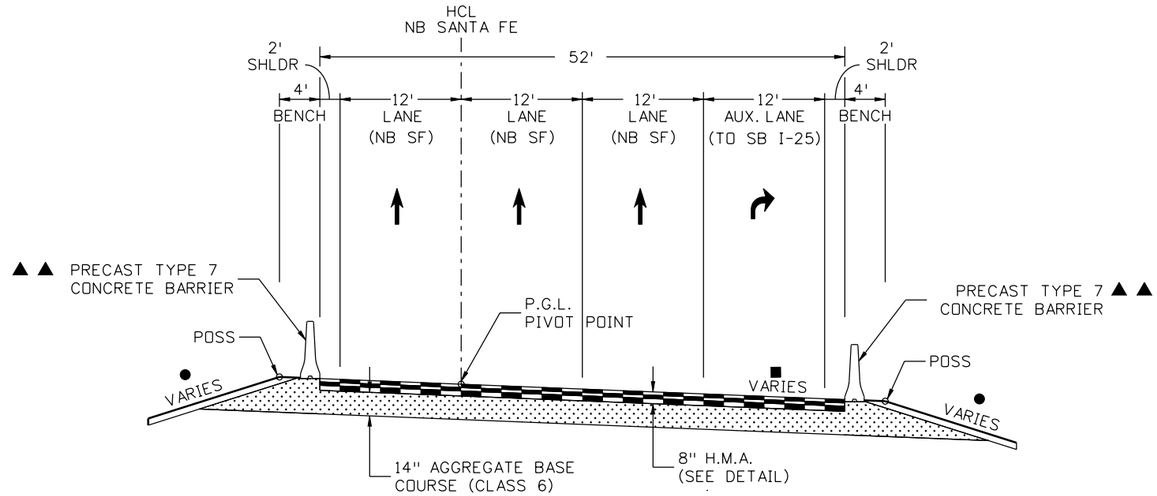

NB SANTA FE
STA. 720+75.37 TO STA. 722+83.92

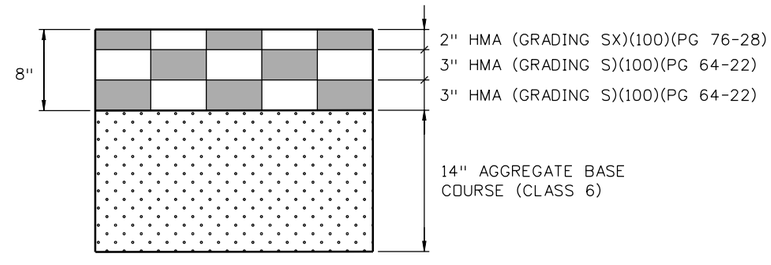

SANTA FE
HMA PAVEMENT DETAIL

NOTES:

1.) BREAK POINTS ON SLOPES AND IN DITCH BOTTOMS SHALL BE ROUNDED DURING CONSTRUCTION FOR A PLEASING APPEARANCE.
2.) SEE GRADING PLANS FOR SLOPE TREATMENT.

● SEE GRADING PLANS FOR ADDITIONAL INFORMATION
■ SEE SUPERELEVATION TABLES AND ROADWAY PROFILES FOR CROSS SLOPE INFORMATION
▲ SEE RETAINING WALL PLANS
▲▲ SEE ROADWAY PLANS FOR LIMITS OF BARRIER

Print Date: 9/27/2010
File Name: 16311DES_PH2_TypSec13.dgn
Horiz. Scale: NTS Vert. Scale: As Noted
Unit Information Unit Leader Initials

FELSBURG HOLT & ULLEVIG 6300 South Syracuse Way Centennial, CO 80111 25 years of engineering paths to transportation solutions

Sheet Revisions		
Date:	Comments	Init.

Colorado Department of Transportation
2000 South Holly Street
Denver, CO 80222
Phone: 303-972-9112 FAX: 303-972-9114
Region 6 RLB

As Constructed
No Revisions:
Revised:
Void:

I-25/SANTA FE INTERCHANGE
TYPICAL SECTION
NB SANTA FE

Designer: SPG
Detailer: SYS
Sheet Subset: TYPICAL
Structure Numbers:
Subset Sheets: TY-13 of 18

Project No./Code
IM 0254-394
16311
Sheet Number 26

Stan 9:39:13 AM K:\08276\16311\Phase 2\Design\Drawings\16311DES_PH2_TypSec13.dgn
9/27/2010 CDOT-PDFDraftQuality_XM.pltcfg CDOT-PenTable.tbl

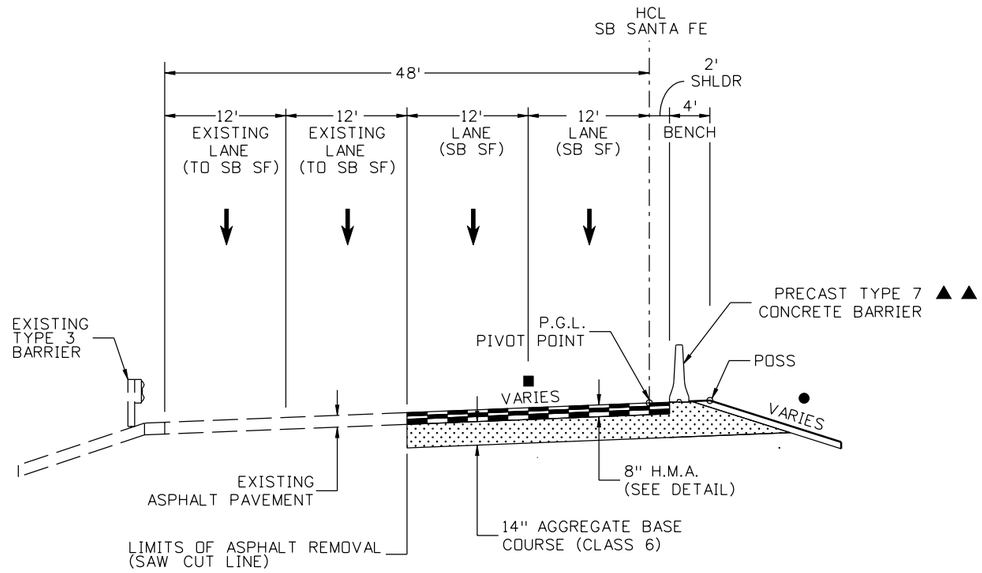

SB SANTA FE
STA. 805+00.00 TO STA. 807+74.80

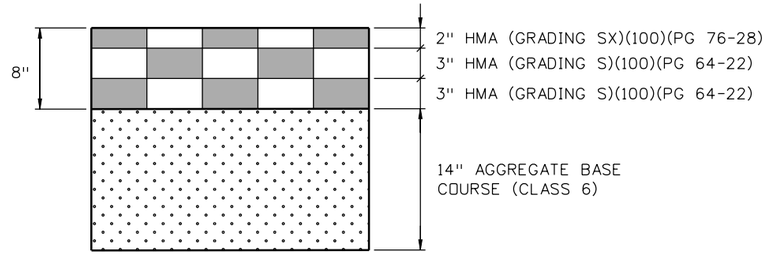

SANTA FE
HMA PAVEMENT DETAIL

NOTES:

1.) BREAK POINTS ON SLOPES AND IN DITCH BOTTOMS SHALL BE ROUNDED DURING CONSTRUCTION FOR A PLEASING APPEARANCE.
2.) SEE GRADING PLANS FOR SLOPE TREATMENT.

● SEE GRADING PLANS FOR ADDITIONAL INFORMATION
■ SEE SUPERELEVATION TABLES AND ROADWAY PROFILES FOR CROSS SLOPE INFORMATION
▲ SEE RETAINING WALL PLANS
▲▲ SEE ROADWAY PLANS FOR LIMITS OF BARRIER

Stan 9:39:16 AM K:\08276\16311\Phase 2\Design\Drawings\16311DES_PH2_TypSec14.dgn
9/27/2010 CDOT-PDFDraftQuality_XM.pltcfg CDOT-PenTable.tbl

Print Date: 9/27/2010	Sheet Revisions	Colorado Department of Transportation	As Constructed
File Name: 16311DES_PH2_TypSec14.dgn	Date: / Comments / Init.	2000 South Holly Street, Denver, CO 80222, Phone: 303-972-9112 FAX: 303-972-9114	No Revisions:
Horiz. Scale: NTS Vert. Scale: As Noted		Region 6 RLB	Revised:
Unit Information Unit Leader Initials			Void:
FELSBURG HOLT & ULLEVIG 6300 South Syracuse Way, Centennial, CO 80111, 25 years of engineering paths to transportation solutions			

I-25/SANTA FE INTERCHANGE
TYPICAL SECTION
SB SANTA FE

Designer: SPG	Structure Numbers		
Detailer: SYS			
Sheet Subset: TYPICAL	Subset Sheets: TY-14 of 18		

Project No./Code
IM 0254-394
16311
Sheet Number 27

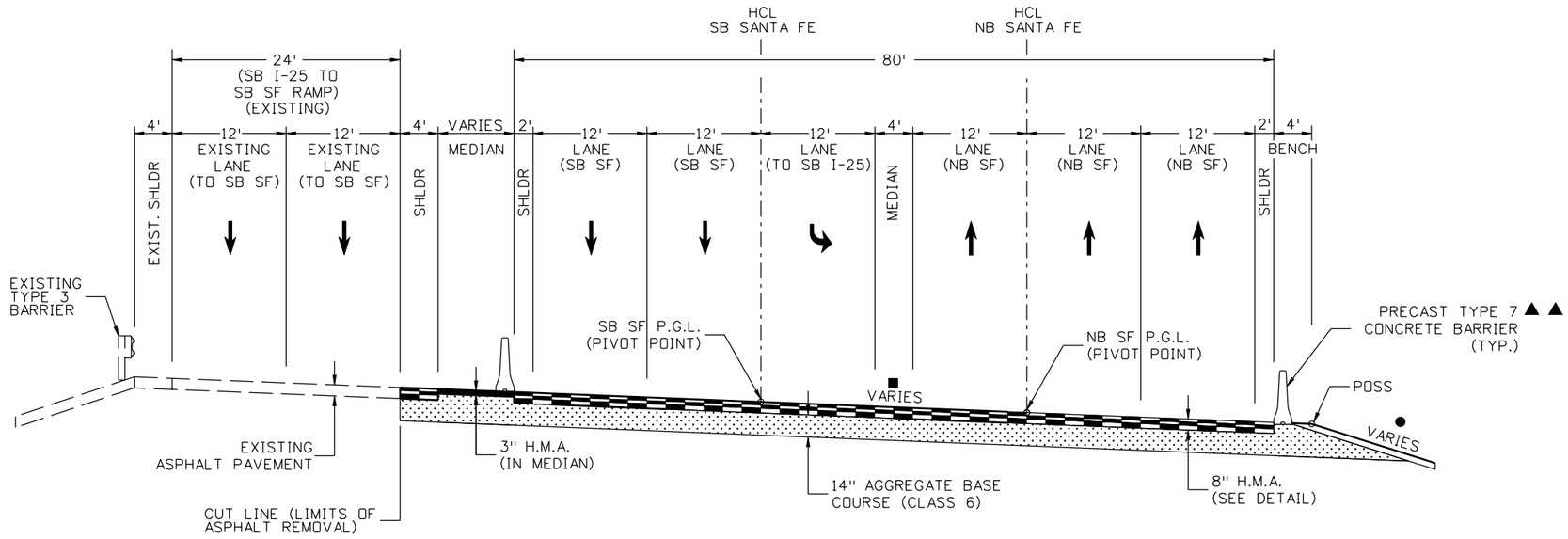

NB & SB SANTA FE
STA. 727+05.43 TO STA. 730+01.04 (NB)
STA. 810+56.44 TO STA. 813+59.34 (SB)

NOTES:

1.) BREAK POINTS ON SLOPES AND IN DITCH BOTTOMS SHALL BE ROUNDED DURING CONSTRUCTION FOR A PLEASING APPEARANCE.
2.) SEE GRADING PLANS FOR SLOPE TREATMENT.

- ● SEE GRADING PLANS FOR ADDITIONAL INFORMATION
- ■ SEE SUPERELEVATION TABLES AND ROADWAY PROFILES FOR CROSS SLOPE INFORMATION
- ▲ SEE RETAINING WALL PLANS
- ▲▲ SEE ROADWAY PLANS FOR LIMITS OF BARRIER

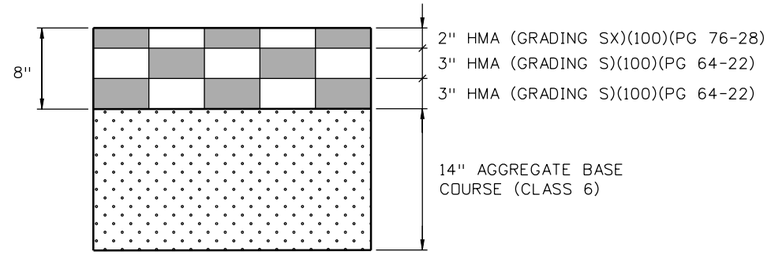

SANTA FE
HMA PAVEMENT DETAIL

Stan 9:39:19 AM K:\08276\16311\Phase 2\Design\Drawings\16311DES_PH2_TypSec15.dgn
9/27/2010 CDOT-PDFDraftQuality_XM.pltcfg CDOT-PenTable.tbl

Print Date: 9/27/2010
File Name: 16311DES_PH2_TypSec15.dgn
Horiz. Scale: NTS Vert. Scale: As Noted
Unit Information Unit Leader Initials

FELSBURG HOLT & ULLEVIG 6300 South Syracuse Way Centennial, CO 80111 25 years of engineering paths to transportation solutions

Sheet Revisions		
Date:	Comments	Init.

Colorado Department of Transportation
DEPARTMENT OF TRANSPORTATION
2000 South Holly Street
Denver, CO 80222
Phone: 303-972-9112 FAX: 303-972-9114
Region 6 RLB

As Constructed
No Revisions:
Revised:
Void:

I-25/SANTA FE INTERCHANGE
TYPICAL SECTION
NB & SB SANTA FE

Designer: SPG
Detailer: SYS
Sheet Subset: TYPICAL
Structure Numbers:
Subset Sheets: TY-15 of 18

Project No./Code
IM 0254-394
16311
Sheet Number 28

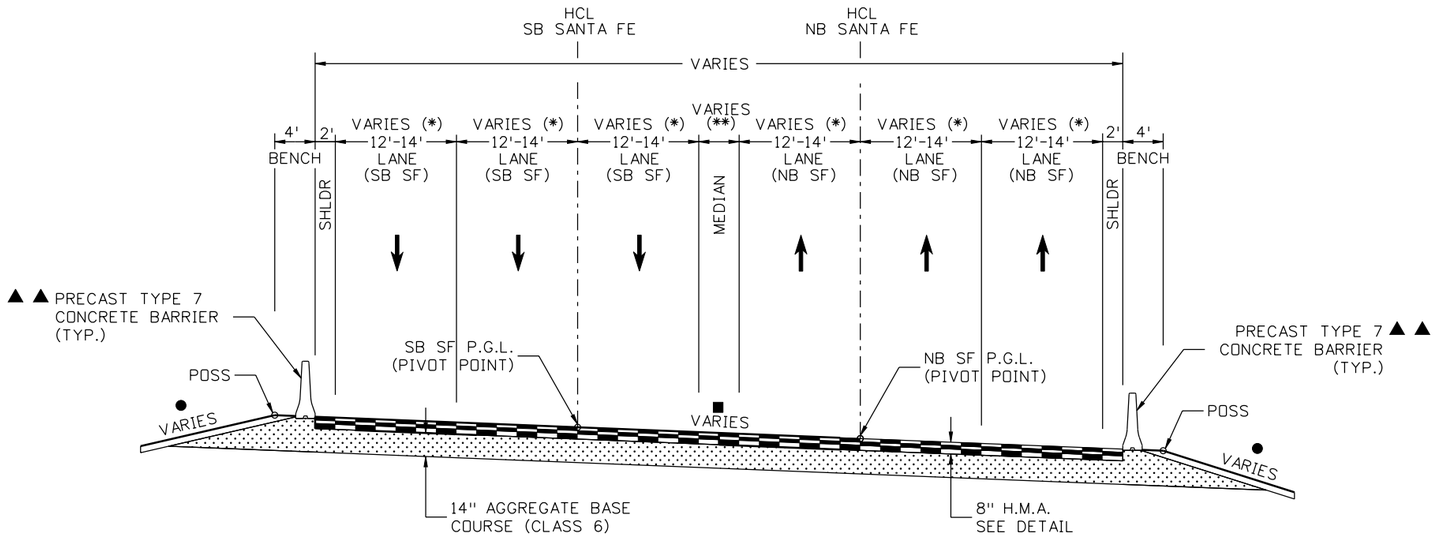

(*) WIDEN NORTHBOUND LANES FROM 12 FT. WIDTH AT STA. 730+01.04 TO 14 FT. WIDTH AT STA. 731+19.30, THEN TRANSITION BACK TO 12 FT. WIDTH AT STA. 732+21.68. WIDEN SOUTHBOUND LANES FROM 12 FT. WIDTH AT STA. 813+59.34 TO 14 FT. WIDTH AT STA. 814+90.33, THEN TRANSITION BACK TO 12 FT. WIDTH LANES AT STA. 815+77.83.

(**) MEDIAN WIDTH = 4 FT. FROM NB STA. 730+01.04 (SB STA. 813+59.34) TO NB STA. 731+96.02 (SB STA. 815+77.83). MEDIAN WIDTH VARIES PAST NB STA. 731+96.02 (SB STA. 815+77.83)

NB & SB SANTA FE
STA. 730+01.04 TO STA. 721+21.68 (NB)
STA. 813+59.34 TO STA. 815+77.83 (SB)

NOTES:

1.) BREAK POINTS ON SLOPES AND IN DITCH BOTTOMS SHALL BE ROUNDED DURING CONSTRUCTION FOR A PLEASING APPEARANCE.
2.) SEE GRADING PLANS FOR SLOPE TREATMENT.

- ● SEE GRADING PLANS FOR ADDITIONAL INFORMATION
- ■ SEE SUPERELEVATION TABLES AND ROADWAY PROFILES FOR CROSS SLOPE INFORMATION
- ▲ SEE RETAINING WALL PLANS
- ▲▲ SEE ROADWAY PLANS FOR LIMITS OF BARRIER

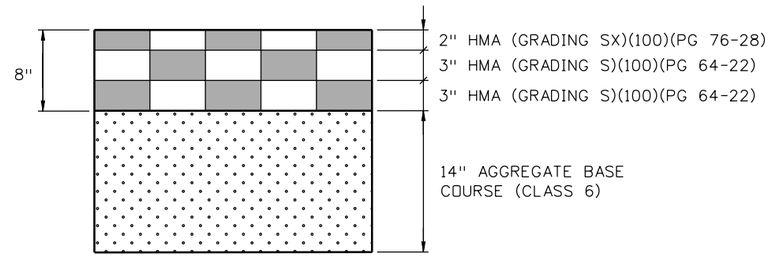

SANTA FE
HMA PAVEMENT DETAIL

Print Date: 9/27/2010	Sheet Revisions			Colorado Department of Transportation	As Constructed
File Name: 16311DES_PH2_TypSec16.dgn	Date:	Comments	Init.	2000 South Holly Street, Denver, CO 80222	No Revisions:
Horiz. Scale: NTS Vert. Scale: As Noted				Phone: 303-972-9112 FAX: 303-972-9114	Revised:
Unit Information Unit Leader Initials				Region 6 RLB	Void:
FELSBURG HOLT & ULLEVIG 6300 South Syracuse Way, Centennial, CO 80111, 25 years of engineering paths to transportation solutions					

I-25/SANTA FE INTERCHANGE TYPICAL SECTION NB & SB SANTA FE			Project No./Code
			IM 0254-394
Designer: SPG	Structure Numbers		16311
Detailer: SYS			
Sheet Subset: TYPICAL	Subset Sheets: TY-16 of 18		Sheet Number 29

Stan 9:39:22 AM K:\08276\16311\Phase 2\Design\Drawings\16311DES_PH2_TypSec16.dgn
9/27/2010 CDOT-PDFDraftQuality_XM.pltcfg CDOT-PenTable.tbl

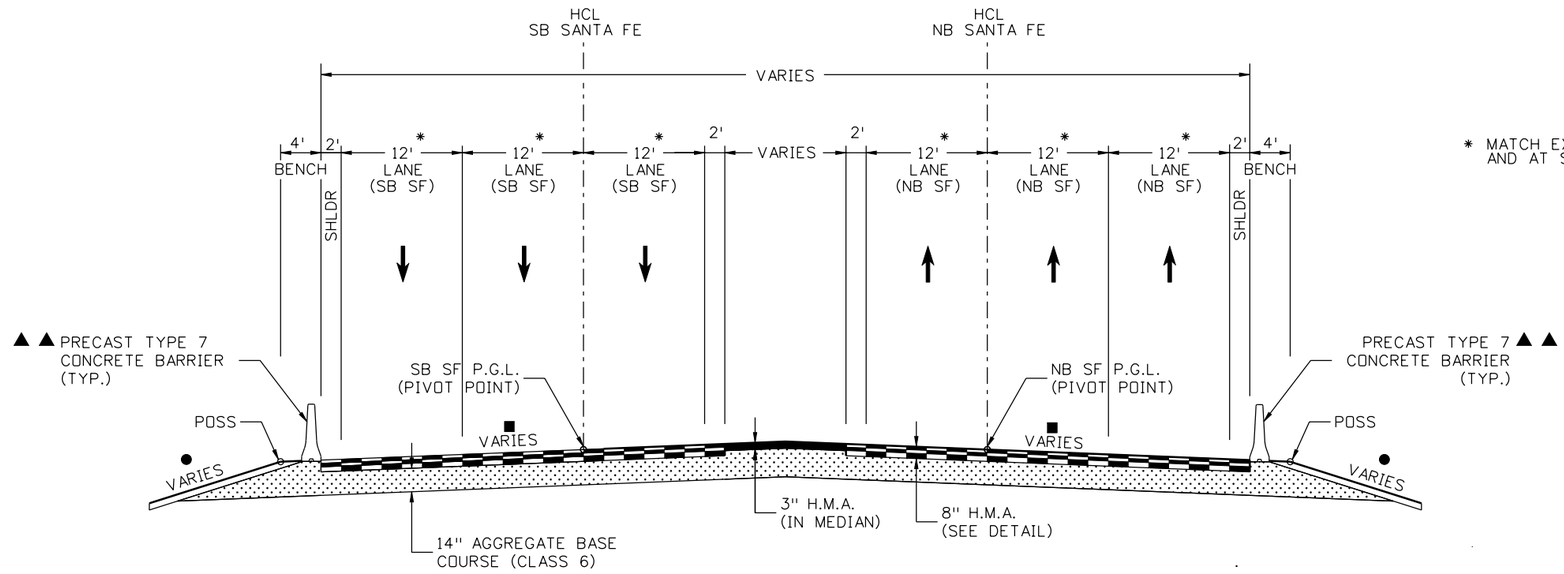

* MATCH EXISTING LANES AT STA. 734+71.79 (NORTHBOUND) AND AT STA. 818+43.15 (SOUTHBOUND).

NB & SB SANTA FE
STA. 721+21.68 TO STA. 734+71.79 (NB)
STA. 816+03.10 TO STA. 818+43.15 (SB)

NOTES:

1.) BREAK POINTS ON SLOPES AND IN DITCH BOTTOMS SHALL BE ROUNDED DURING CONSTRUCTION FOR A PLEASING APPEARANCE.
2.) SEE GRADING PLANS FOR SLOPE TREATMENT.

● SEE GRADING PLANS FOR ADDITIONAL INFORMATION
■ SEE SUPERELEVATION TABLES AND ROADWAY PROFILES FOR CROSS SLOPE INFORMATION
▲ SEE RETAINING WALL PLANS
▲▲ SEE ROADWAY PLANS FOR LIMITS OF BARRIER

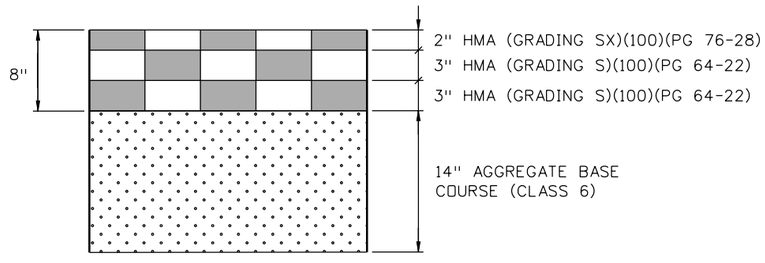

SANTA FE
HMA PAVEMENT DETAIL

Stan 9:39:26 AM K:\08276\16311\Phase 2\Design\Drawings\16311DES_PH2_TypSec17.dgn
9/27/2010 CDOT-PDFDraftQuality_XM.pltcfg CDOT-PenTable.tbl

Print Date: 9/27/2010		Sheet Revisions			Colorado Department of Transportation	As Constructed	I-25/SANTA FE INTERCHANGE TYPICAL SECTION NB & SB SANTA FE	Project No./Code
File Name: 16311DES_PH2_TypSec17.dgn		Date:	Comments	Init.	2000 South Holly Street Denver, CO 80222 Phone: 303-972-9112 FAX: 303-972-9114	No Revisions:		IM 0254-394
Horiz. Scale: NTS	Vert. Scale: As Noted					Revised:	Designer: SPG / Structure Numbers	16311
Unit Information	Unit Leader Initials					Void:	Detailer: SYS	
FELSBURG HOLT & ULLEVIG 6300 South Syracuse Way Centennial, CO 80111 25 years of engineering paths to transportation solutions					Region 6 RLB		Sheet Subset: TYPICAL / Subset Sheets: TY-17 of 18	Sheet Number 30

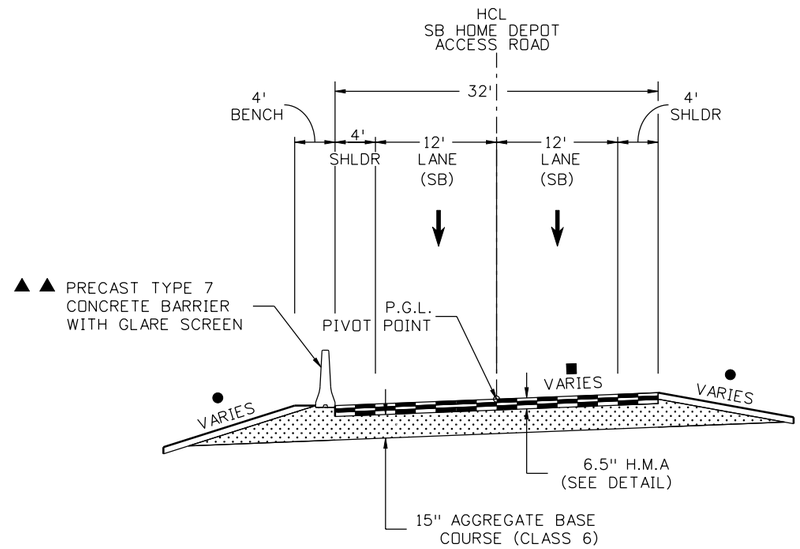

HOME DEPOT ACCESS ROAD
STA. 93+26.62 TO STA. 94+90.46

NOTES:

1.) BREAK POINTS ON SLOPES AND IN DITCH BOTTOMS SHALL BE ROUNDED DURING CONSTRUCTION FOR A PLEASING APPEARANCE.
2.) SEE GRADING PLANS FOR SLOPE TREATMENT.

- ● SEE GRADING PLANS FOR ADDITIONAL INFORMATION
- ■ SEE SUPERELEVATION TABLES AND ROADWAY PROFILES FOR CROSS SLOPE INFORMATION
- ▲ SEE RETAINING WALL PLANS
- ▲▲ SEE ROADWAY PLANS FOR LIMITS OF BARRIER

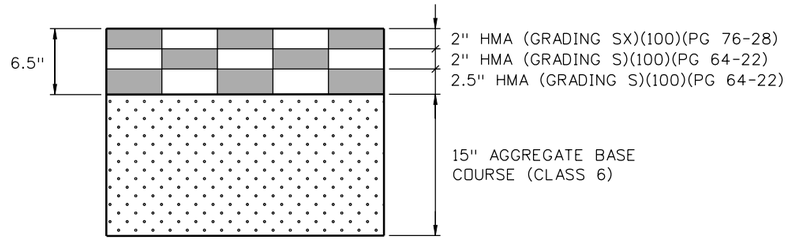

HOME DEPOT ACCESS ROAD
HMA PAVEMENT DETAIL

Print Date: 9/27/2010	Sheet Revisions	Colorado Department of Transportation	As Constructed
File Name: 16311DES_PH2_TypSec18.dgn	Date: / Comments / Init.	2000 South Holly Street, Denver, CO 80222	No Revisions:
Horiz. Scale: NTS Vert. Scale: As Noted		Phone: 303-972-9112 FAX: 303-972-9114	Revised:
Unit Information Unit Leader Initials		Region 6 RLB	Void:
FELSBURG HOLT & ULLEVIG 6300 South Syracuse Way, Centennial, CO 80111, 25 years of engineering paths to transportation solutions			

I-25/SANTA FE INTERCHANGE TYPICAL SECTION HOME DEPOT ACCESS ROAD			Project No./Code
Designer: SPG	Structure Numbers		IM 0254-394
Detailer: SYS			16311
Sheet Subset: TYPICAL	Subset Sheets: TY-18 of 18		Sheet Number 31

Stan 9:39:30 AM K:\08276\16311\Phase 2\Design\Drawings\16311DES_PH2_TypSec18.dgn
9/27/2010 CDOT-PDFDraftQuality_XM.pltcfg CDOT-PenTable.tbl

STATION I-25 MAINLINE HCL	LEFT SIDE CROSS-SLOPE (percent)	RIGHT SIDE CROSS SLOPE (percent)	DESCRIPTION
615+49.08	-0.141	0.141	match end existing Broadway bridge
615+63.74	0.000	0.000	super transition
617+83.97	2.000	-2.000	reverse crown
619+60.15	3.600	-3.600	PC C-I25.2
621+70.15	6.000	-6.000	begin full super elevation
632+77.46	6.000	-6.000	end full super elevation
634+87.46	3.600	-3.600	PT C-I25.2
636+27.46	2.000	-2.000	reverse crown
638+02.46	0.000	-2.000	runout
639+77.46	-2.000	-2.000	normal crown
639+85.10	-2.000	-2.000	normal crown
641+55.10	-2.000	0.000	runout
642+57.10	-2.000	1.200	PC C-I25.3
643+25.10	-2.000	2.000	begin reverse crown
644+75.00	-2.000	2.000	match existing phase 1 section

STATION I-25 MAINLINE HCL	STATION I-25 LEFT HCL	STATION I-25 RIGHT HCL	LEFT SIDE OF I-25 MAINLINE CROSS-SLOPE (percent)	RIGHT SIDE OF I-25 MAINLINE CROSS SLOPE (percent)	DESCRIPTION
615+49.08			-0.141	0.141	match end existing Broadway bridge
615+63.74			0.000	0.000	no cross slope at super transition
617+83.97	2617+83.97	1617+83.97	2.000	-2.000	reverse crown
619+60.15	2619+60.15	1619+60.15	3.600	-3.600	PC C-I25.2, C-I25.2L, C-I25.2R
621+70.15	2621+71.69	1621+68.61	6.000	-6.000	begin full super elevation
632+77.46	2632+87.11	1632+67.81	6.000	-6.000	end full super elevation
634+87.46	2634+98.65	1634+76.28	3.600	-3.600	PT C-I25.2, C-I25.2L, C-I25.2R
636+27.46	2636+38.65	1636+16.27	2.000	-2.000	reverse crown
638+02.46	2638+13.65	1637+91.27	0.000	-2.000	runout
639+77.46	2639+88.65	1639+66.27	-2.000	-2.000	normal crown
639+85.10	2639+96.29	1639+73.91	-2.000	-2.000	normal crown
641+55.10	2641+66.29	1641+43.91	-2.000	0.000	runout
642+57.10			-2.000	1.200	PC C-I25.3
643+25.10			-2.000	2.000	begin reverse crown
644+75.00			-2.000	2.000	match existing phase 1 section

NOTE:
1. CENTER PIVOT AROUND PGL AT THE HCL
2. NEGATIVE CROSS-SLOPE IF FALLING AWAY (SLOPING DOWN FROM THE PIVOT POINT
3. POSITIVE CROSS-SLOPE IF RAISING AWAY (SLOPING UP) FROM THE PIVOT POINT

Print Date: 9/27/2010
File Name: 16311DES_PH2_SuperElevationTable1.dgn
Horiz. Scale: NTS Vert. Scale: As Noted
Unit Information Unit Leader Initials

FELSBURG HOLT & ULLEVIG 6300 South Syracuse Way Centennial, CO 80111 25 years of engineering paths to transportation solutions

Sheet Revisions

Date:	Comments	Init.

Colorado Department of Transportation
DEPARTMENT OF TRANSPORTATION
2000 South Holly Street
Denver, CO 80222
Phone: 303-972-9112 FAX: 303-972-9114
Region 6 RLB

As Constructed
No Revisions:
Revised:
Void:

I-25/SANTA FE INTERCHANGE
I-25 MAINLINE
SUPER ELEVATION TABLES

Designer: SPG
Detailer: SYS
Sheet Subset: ROADWAY
Structure Numbers:
Subset Sheets: SET-1 of 3

Project No./Code
IM 0254-394
16311
Sheet Number 32

Stan 9:39:34 AM K:\08276\16311\Phase 2\Design\Drawings\16311DES_PH2_SuperElevationTable1.dgn
9/27/2010 CDOT-PDFDraftQuality_XM.pltcfg CDOT-PenTable.tbl

STATION RAMP 1 HCL	LEFT SIDE CROSS-SLOPE (percent)	RIGHT SIDE CROSS SLOPE (percent)	DESCRIPTION
106+00.00	varies	varies	match northbound Santa Fe
109+00.00	2.000	-2.000	match northbound Santa Fe
110+19.77	2.000	-2.000	PC C-R1.1
111+69.77	3.000	-3.000	begin full superelevation
115+84.33	3.000	-3.000	end full superelevation
117+34.33	2.000	-2.000	PT C-R1.1
119+56.90	2.000	-2.000	runout
120+31.90	0.000	0.000	runout
121+06.90	-2.000	2.000	PC C-R1.2
121+56.90	-3.400	3.400	begin full superelevation
124+43.64	-3.400	3.400	end full superelevation
124+93.64	-2.000	2.000	PT C-R1.2
125+68.64	0.000	0.000	runout
126+43.64	2.000	-2.000	runout
135+99.06	2.000	-2.000	match existing northbound I-25

STATION RAMP 3 HCL	LEFT SIDE CROSS-SLOPE (percent)	RIGHT SIDE CROSS SLOPE (percent)	DESCRIPTION
300+00.00	1.460	-1.460	match SB I-25
300+58.97	1.000	-2.000	pivot about hcl
301+09.91	1.000	-2.460	pivot about hcl
301+54.96	1.000	-2.870	pivot about hcl
302+00.00	1.000	-3.280	pivot about hcl
302+50.00	1.000	-3.760	pivot about hcl
303+00.00	1.000	-4.300	pivot about hcl
304+00.00	2.000	-2.000	end transition
309+80.75	2.000	-2.000	match NB Santa Fe

STATION RAMP 2 HCL	LEFT SIDE CROSS-SLOPE (percent)	RIGHT SIDE CROSS SLOPE (percent)	DESCRIPTION
200+00.00	3.600	-3.600	match NB I-25 cross-slope
202+01.25	6.000	-6.000	match NB I-25 cross-slope
205+00.00	6.000	-6.000	match NB I-25 cross-slope
206+50.00	2.000	-2.000	begin normal crown
217+06.69	1.160	-1.160	match existing
.			

STATION RAMP 4 HCL	LEFT SIDE CROSS-SLOPE (percent)	RIGHT SIDE CROSS SLOPE (percent)	DESCRIPTION
404+27.16	3.000	-3.000	match existing ramp
406+27.16	-2.000	2.000	end transition
415+91.51	-2.000	2.000	match southbound I-25

NOTE:
1. CENTER PIVOT AROUND PGL AT THE HCL
2. NEGATIVE CROSS-SLOPE IF FALLING AWAY (SLOPING DOWN FROM THE PIVOT POINT
3. POSITIVE CROSS-SLOPE IF RAISING AWAY (SLOPING UP) FROM THE PIVOT POINT

Print Date: 9/27/2010
File Name: 16311DES_PH2_SuperElevationTable2.dgn
Horiz. Scale: NTS Vert. Scale: As Noted
Unit Information Unit Leader Initials

FELSBURG HOLT & ULLEVIG 6300 South Syracuse Way Centennial, CO 80111 25 years of engineering paths to transportation solutions

Sheet Revisions

Date:	Comments	Init.

Colorado Department of Transportation
DEPARTMENT OF TRANSPORTATION
2000 South Holly Street
Denver, CO 80222
Phone: 303-972-9112 FAX: 303-972-9114
Region 6 RLB

As Constructed
No Revisions:
Revised:
Void:

I-25/SANTA FE INTERCHANGE
RAMPS 1, 2, 3, 4
SUPER ELEVATION TABLES

Designer: SPG Structure Numbers
Detailer: SYS
Sheet Subset: ROADWAY Subset Sheets: SET-2 of 3

Project No./Code
IM 0254-394
16311
Sheet Number 33

Stan 9:39:38 AM K:\08276\16311\Phase 2\Design\Drawings\16311DES_PH2_SuperElevationTable2.dgn
9/27/2010 CDOT-PDFDraftQuality_XM.pltcfg CDOT-PenTable.tbl

STATION NB SANTA FE HCL	LEFT SIDE CROSS-SLOPE (percent)	RIGHT SIDE CROSS SLOPE (percent)	DESCRIPTION
712+52.70	0.800	-0.800	match existing northbound Santa Fe
713+15.00	2.000	-2.000	begin normal cross-slope
734+00.00	2.000	-2.000	end normal cross-slope
734+71.79	2.820	-2.820	match existing northbound Santa Fe

STATION SB SANTA FE HCL	LEFT SIDE CROSS-SLOPE (percent)	RIGHT SIDE CROSS SLOPE (percent)	DESCRIPTION
805+00.00	varies	varies	match abutting SB ramp (ramp 4)
810+56.44	1.690	-1.690	match abutting SB ramp (ramp 4)
810+75.00	2.000	-2.000	begin normal crown
815+00.00	2.000	-2.000	end normal crown
816+00.00	0.000	0.000	runout
817+00.00	-2.000	2.000	end transition
817+73.66	-2.000	2.000	normal crown
818+43.15	0.240	-0.240	match existing NB Santa Fe

STATION HOME DEPOT HCL	LEFT SIDE CROSS-SLOPE (percent)	RIGHT SIDE CROSS SLOPE (percent)	DESCRIPTION
93+06.07	varies	varies	match ramp 2
93+26.62	2.060	-2.060	begin transition
93+78.12	0.000	0.000	transition
94+28.12	-2.000	2.000	begin normal cross-slope
95+50.00	-2.000	2.000	begin transition
96+30.82	-3.020	3.020	match existing access road

NOTE:
1. CENTER PIVOT AROUND PGL AT THE HCL
2. NEGATIVE CROSS-SLOPE IF FALLING AWAY (SLOPING DOWN FROM THE PIVOT POINT
3. POSITIVE CROSS-SLOPE IF RAISING AWAY (SLOPING UP) FROM THE PIVOT POINT

Print Date: 9/27/2010
File Name: 16311DES_PH2_SuperElevationTable3.dgn
Horiz. Scale: NTS Vert. Scale: As Noted
Unit Information Unit Leader Initials

FELSBURG HOLT & ULLEVIG 6300 South Syracuse Way Centennial, CO 80111 25 years of engineering paths to transportation solutions

Sheet Revisions

Date:	Comments	Init.

Colorado Department of Transportation
DEPARTMENT OF TRANSPORTATION
2000 South Holly Street
Denver, CO 80222
Phone: 303-972-9112 FAX: 303-972-9114
Region 6 RLB

As Constructed
No Revisions:
Revised:
Void:

I-25/SANTA FE INTERCHANGE
SANTA FE AND HOME DEPOT ACCESS
SUPER ELEVATION TABLES

Designer: SPG
Detailer: SYS
Sheet Subset: ROADWAY
Structure Numbers:
Subset Sheets: SET-3of 3

Project No./Code
IM 0254-394
16311
Sheet Number 34

Stan 9:39:43 AM K:\08276\16311\Phase 2\Design\Drawings\16311DES_PH2_SuperElevationTable3.dgn
9/27/2010 CDOT-PDFDraftQuality_XM.pltcfg CDOT-PenTable.tbl

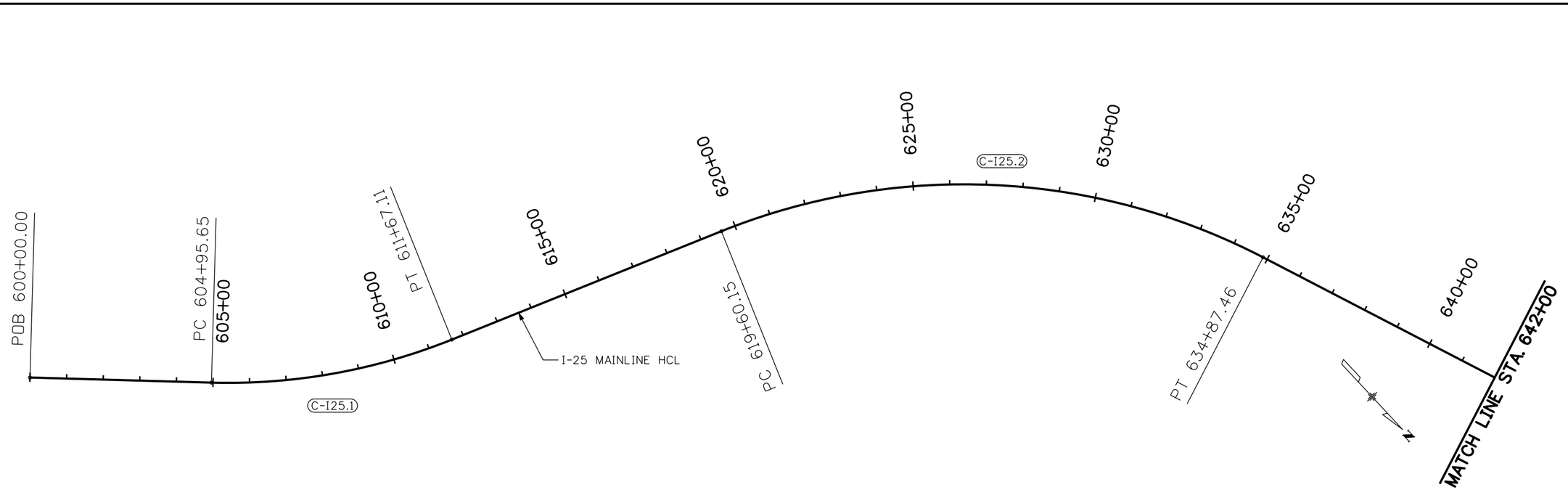

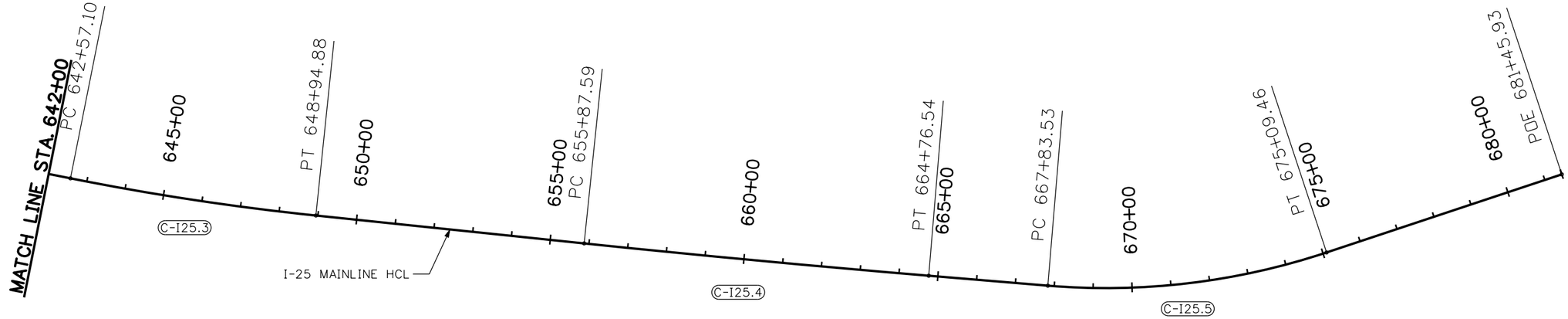

(1) SEE CURVE DATA TABLE ON SHEET GM-10

CONTROL LINE DATA - I-25 HCL

POINT ID (1)	BEARING	DISTANCE (FEET)	NORTHING (Y)	EASTING (X)	PC	PI	PT	DELTA	R	L	T
POB	N 45°25'29" W	495.646 '	678686.6802	963341.1879		600+00.000					
PI C-I25.1	N 68°55'35" W	1133.556 '	679273.5411	962745.5619	604+95.646		611+67.113	23°30'06"	-1637.000 '	671.467 '	340.522 '
PI C-I25.2	N 19°37'33" W	1584.188 '	679974.0144	960927.7515	619+60.147		634+87.462	49°18'02"	1775.000 '	1527.315 '	814.545 '
PI C-I25.3	N 24°59'02" W	1011.828 '	681766.7543	960288.4789	642+57.104		648+94.882	5°21'29"	-6820.000 '	637.778 '	319.121 '
PI C-I25.4	N 26°08'29" W	751.483 '	683086.8025	959673.3855	655+87.588		664+76.542	1°09'27"	-44000.000 '	888.954 '	444.492 '
PI C-I25.5	N 49°14'54" W	1004.432 '	684091.7409	959180.1717	667+83.533		675+09.459	23°06'25"	-1800.000 '	725.926 '	367.964 '
POE			684747.4160	958419.2691		681+45.927					

N

0' 150' 300' 600'

Print Date: 9/27/2010
File Name: 16311DES_PH2_GeomPlan1.dgn
Horiz. Scale: 1:300 Vert. Scale: As Noted
Unit Information Unit Leader Initials

FELSBURG HOLT & ULLEVIG 6300 South Syracuse Way Centennial, CO 80111

0000

Sheet Revisions		
Date:	Comments	Init.

Colorado Department of Transportation
DEPARTMENT OF TRANSPORTATION
2000 South Holly Street
Denver, CO 80222
Phone: 303-972-9112 FAX: 303-972-9114
Region 6 RLB

As Constructed
No Revisions:
Revised:
Void:

I-25/SANTA FE INTERCHANGE
I-25 MAINLINE HCL
GEOMETRIC PLAN

Designer: SPG
Detailer: SYS
Sheet Subset: ROADWAY
Structure Numbers:
Subset Sheets: GM-1 of 10

Project No./Code
IM 0254-394
16311
Sheet Number 35

Stan 9:39:46 AM K:\08276\16311\Phase 2\Design\Drawings\16311DES_PH2_GeomPlan1.dgn
9/27/2010 CDOT-PDFDraftQuality_XM.pltcfg CDOT-PenTable.tbl

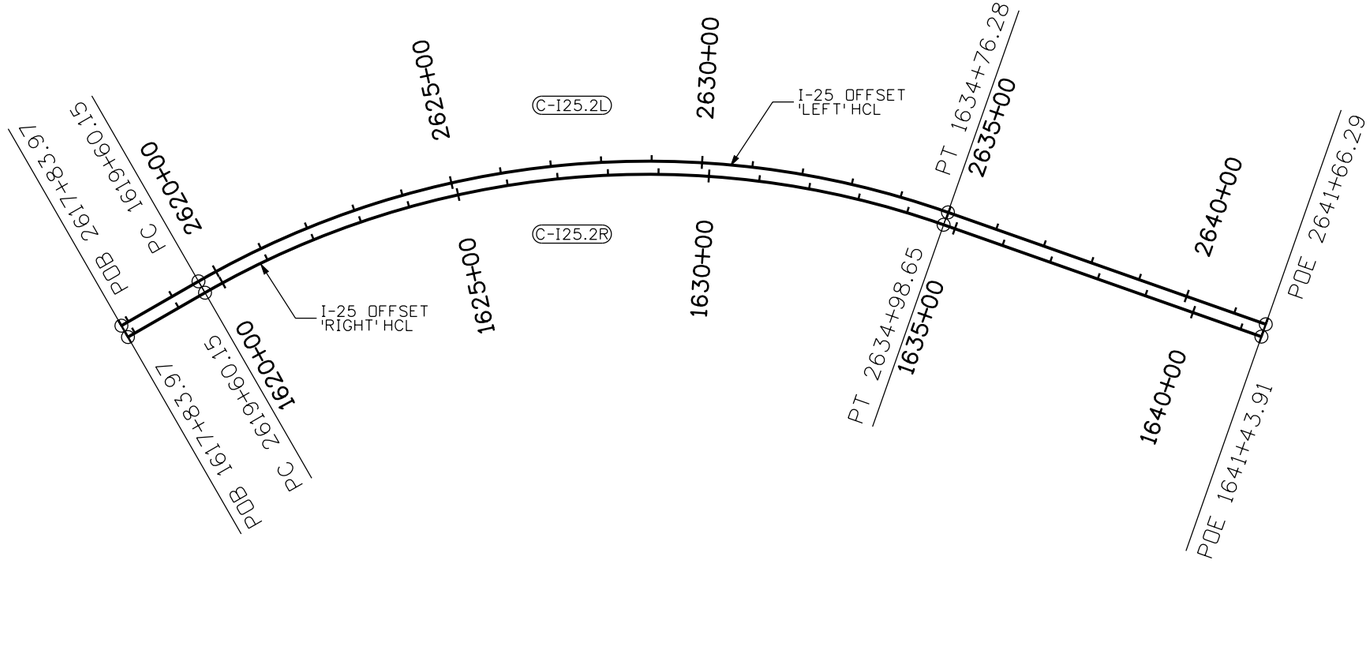

CONTROL LINE DATA - I-25L HCL

POINT ID (1)	BEARING	DISTANCE (FEET)	NORTHING (Y)	EASTING (X)	PC	PI	PT	DELTA	R	L	T
POB	N 68°55'35" W	176.177 '	679605.6524	961847.5396		2617+83.970					
PI C-I25.2L	N 19°37'33" W	1488.149 '	679964.0289	960917.5105	2619+60.147		2634+98.648	49°18'02"	1788.000 '	1538.501 '	820.511 '
POE			681365.7266	960417.6795		2641+66.286					

CONTROL LINE DATA - I-25R HCL

POINT ID (1)	BEARING	DISTANCE (FEET)	NORTHING (Y)	EASTING (X)	PC	PI	PT	DELTA	R	L	T
POB	N 68°55'35" W	176.177 '	679629.9135	961856.8883		1617+83.970					
PI C-I25.2R	N 19°37'33" W	1476.218 '	679984.0000	960937.9926	1619+60.147		1634+76.276	49°18'02"	1762.000 '	1516.129 '	808.580 '
POE			681374.4593	960442.1691		1641+43.914					

(1) SEE CURVE DATA TABLE ON SHEET GM-10

Stan 9:39:49 AM K:\08276\16311\Phase 2\Design\Drawings\16311DES_PH2_GeomPlan2.dgn
9/27/2010 CDOT-PDFDraftQuality_XM.pltcfg CDOT-PenTable.tbl

Print Date: 9/27/2010
File Name: 16311DES_PH2_GeomPlan2.dgn
Horiz. Scale: 1:300.089 Vert. Scale: As Noted
Unit Information Unit Leader Initials

FELSBURG HOLT & ULLEVIG 6300 South Syracuse Way Centennial, CO 80111

Sheet Revisions		
Date:	Comments	Init.

Colorado Department of Transportation
2000 South Holly Street
Denver, CO 80222
Phone: 303-972-9112 FAX: 303-972-9114
Region 6 RLB

As Constructed
No Revisions:
Revised:
Void:

I-25/SANTA FE INTERCHANGE
I-25 OFFSET RT & LT HCL
GEOMETRIC PLAN

Designer: SPG
Detailer: SYS
Sheet Subset: ROADWAY
Structure Numbers:
Subset Sheets: GM-2 of 10

Project No./Code
IM 0254-394
16311
Sheet Number 36

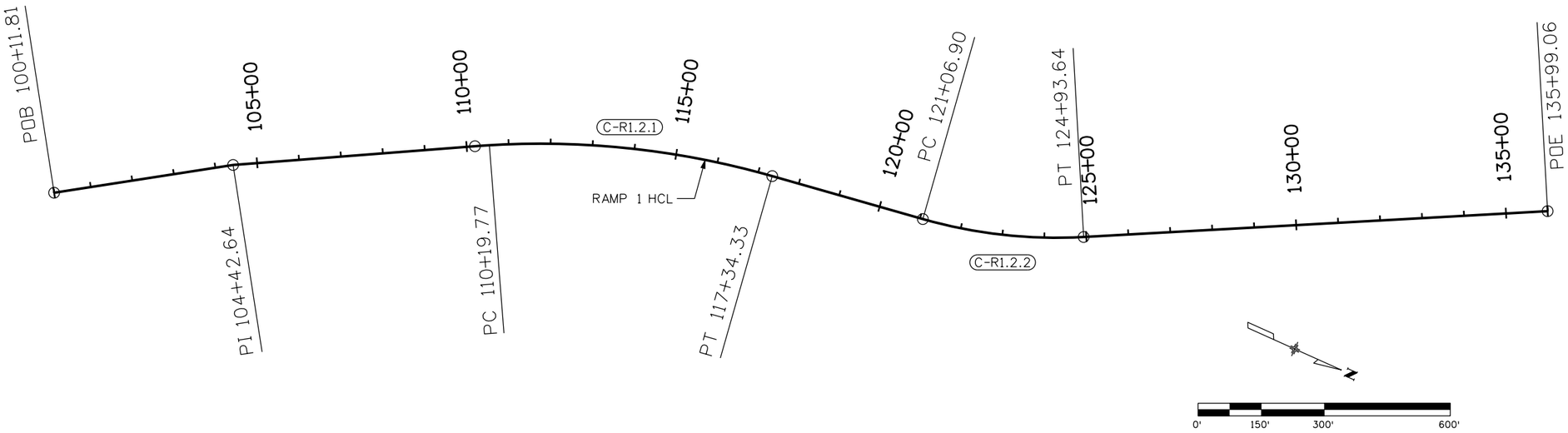

CONTROL LINE DATA - Ramp 1 PH2 HCL

POINT ID (1)	BEARING	DISTANCE (FEET)	NORTHING (Y)	EASTING (X)	PC	PI	PT	DELTA	R	L	T
POB	N 32°57'13" W	430.826 '	678442.1881	961814.1035		100+11.811					
PI	N 28°34'03" W	577.133 '	678803.6990	961579.7504		104+42.637					
PI C-R1.2.1	N 8°13'08" W	733.650 '	679627.6924	961131.0990	110+19.770		117+34.334	20°20'55"	2012.000 '	714.564 '	361.085 '
PI C-R1.2.2	N 27°19'17" W	1300.595 '	680546.9867	960998.3164	121+06.899		124+93.645	19°06'09"	-1160.000 '	386.746 '	195.184 '
POE			681702.4941	960401.3668		135+99.055					

(1) SEE CURVE DATA TABLE ON SHEET GM-10

Print Date: 9/27/2010
File Name: 16311DES_PH2_GeomPlan3.dgn
Horiz. Scale: 1:300 Vert. Scale: As Noted
Unit Information Unit Leader Initials

FELSBURG HOLT & ULLEVIG 6300 South Syracuse Way Centennial, CO 80111

Sheet Revisions		
Date:	Comments	Init.

Colorado Department of Transportation
DEPARTMENT OF TRANSPORTATION
2000 South Holly Street
Denver, CO 80222
Phone: 303-972-9112 FAX: 303-972-9114
Region 6 RLB

As Constructed
No Revisions:
Revised:
Void:

I-25/SANTA FE INTERCHANGE
RAMP 1 HCL
GEOMETRIC PLAN

Designer: SPG
Detailer: SYS
Sheet Subset: ROADWAY
Structure Numbers:
Subset Sheets: GM-3 of 10

Project No./Code
IM 0254-394
16311
Sheet Number 37

Stan 9:39:52 AM K:\08276\16311\Phase 2\Design\Drawings\16311DES_PH2_GeomPlan3.dgn
9/27/2010 CDOT-PDFDraftQuality_XM.pltcfg CDOT-PenTable.tbl

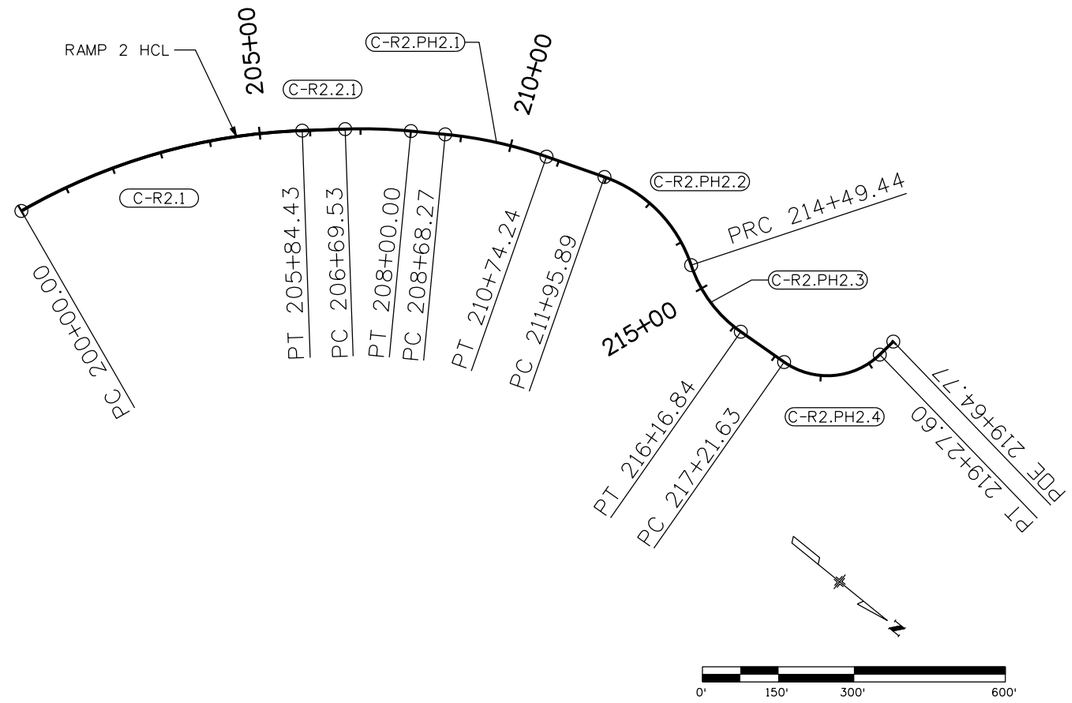

CONTROL LINE DATA - Ramp 2 PH2 HCL

POINT ID	BEARING	DISTANCE (FEET)	NORTHING (Y)	EASTING (X)	PC	PI	PT	DELTA	R	L	T
PI C-R2.1	N 41°01'19" W	383.236 '	679856.4459	961435.8773	200+00.000		205+84.427	27°54'16"	1200.000 '	584.427 '	298.130 '
PI C-R2.2.1	N 33°32'49" W	133.599 '	680194.8667	961141.4639	206+69.533		208+00.000	7°28'31"	1000.000 '	130.467 '	65.326 '
PI C-R2.PH2.1	N 19°39'48" W	311.808 '	680392.4659	961010.4434	208+68.273		210+74.241	13°53'01"	850.000 '	205.968 '	103.491 '
PI C-R2.PH2.2	N 32°35'38" E	303.770 '	680732.8828	960888.8031	211+95.885		214+49.437	52°15'25"	278.000 '	253.552 '	136.362 '
PI C-R2.PH2.3	N 4°00'57" W	191.457 '	680920.7923	961008.9475	214+49.437		216+16.844	36°36'35"	-262.000 '	167.408 '	86.673 '
PI C-R2.PH2.4	N 82°55'35" W	160.256 '	681234.5604	960986.9189	217+21.629		219+27.595	78°54'37"	-149.549 '	205.966 '	123.083 '
POE			681254.2952	960827.8831		219+64.769					

(1) SEE CURVE DATA TABLE ON SHEET GM-10

Print Date: 9/27/2010
File Name: 16311DES_PH2_GeomPlan4.dgn
Horiz. Scale: 1:300 Vert. Scale: As Noted
Unit Information Unit Leader Initials

FELSBURG HOLT & ULLEVIG 6300 South Syracuse Way Centennial, CO 80111

Sheet Revisions		
Date:	Comments	Init.

Colorado Department of Transportation
DEPARTMENT OF TRANSPORTATION
2000 South Holly Street
Denver, CO 80222
Phone: 303-972-9112 FAX: 303-972-9114
Region 6 RLB

As Constructed
No Revisions:
Revised:
Void:

I-25/SANTA FE INTERCHANGE
RAMP 2 HCL
GEOMETRIC PLAN

Designer: SPG
Detailer: SYS
Sheet Subset: ROADWAY
Structure Numbers:
Subset Sheets: GM-4 of 10

Project No./Code
IM 0254-394
16311
Sheet Number 38

Stan 9:39:55 AM K:\08276\16311\Phase 2\Design\Drawings\16311DES_PH2_GeomPlan4.dgn
9/27/2010 CDOT-PDFDraftQuality_XM.pltcfg CDOT-PenTable.tbl

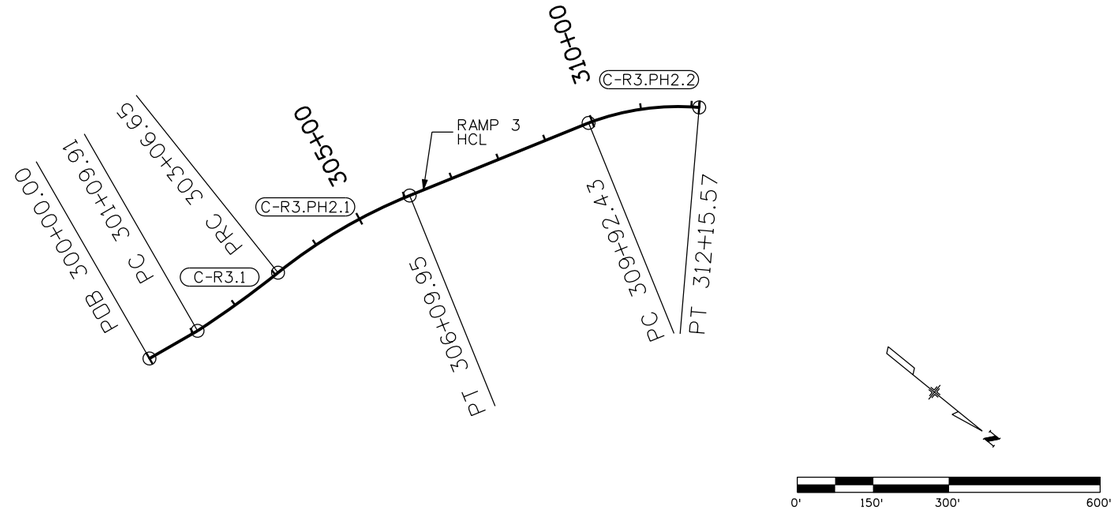

CONTROL LINE DATA - Ramp 3 PH2 HCL

POINT ID (1)	BEARING	DISTANCE (FEET)	NORTHING (Y)	EASTING (X)	PC	PI	PT	DELTA	R	L	T
POB	N 68°55'35" W	109.914 '	679539.659	961885.3064		300+00.000					
PI C-R3.1	N 77°38'51" W	401.743 '	679609.5155	961689.0853	301+09.914		303+06.655	5°35'39"	-2015.000 '	196.741 '	98.449 '
PI C-R3.PH2.1	N 61°05'51" W	535.194 '	679663.2447	961443.7404	303+06.655		306+09.949	16°33'00"	1050.000 '	303.294 '	152.710 '
PI C-R3.PH2.2	N 34°11'23" W	'	679979.0552	960877.1914	309+92.432		312+15.567	25°34'10"	500.000 '	223.134 '	113.456 '

(1) SEE CURVE DATA TABLE ON SHEET GM-10

Print Date: 9/27/2010
File Name: 16311DES_PH2_GeomPlan5.dgn
Horiz. Scale: 1:300 Vert. Scale: As Noted
Unit Information Unit Leader Initials

FELSBURG HOLT & ULLEVIG 6300 South Syracuse Way Centennial, CO 80111

Sheet Revisions

Date:	Comments	Init.

Colorado Department of Transportation
DEPARTMENT OF TRANSPORTATION
2000 South Holly Street
Denver, CO 80222
Phone: 303-972-9112 FAX: 303-972-9114
Region 6 RLB

As Constructed
No Revisions:
Revised:
Void:

I-25/SANTA FE INTERCHANGE
RAMP 3 HCL
GEOMETRIC PLAN

Designer: SPG
Detailer: SYS
Sheet Subset: ROADWAY
Structure Numbers:
Subset Sheets: GM-5 of 10

Project No./Code
IM 0254-394
16311
Sheet Number 39

Stan 9:39:58 AM K:\08276\16311\Phase 2\Design\Drawings\16311DES_PH2_GeomPlan5.dgn
9/27/2010 CDOT-PDFDraftQuality_XM.pltcfg CDOT-PenTable.tbl

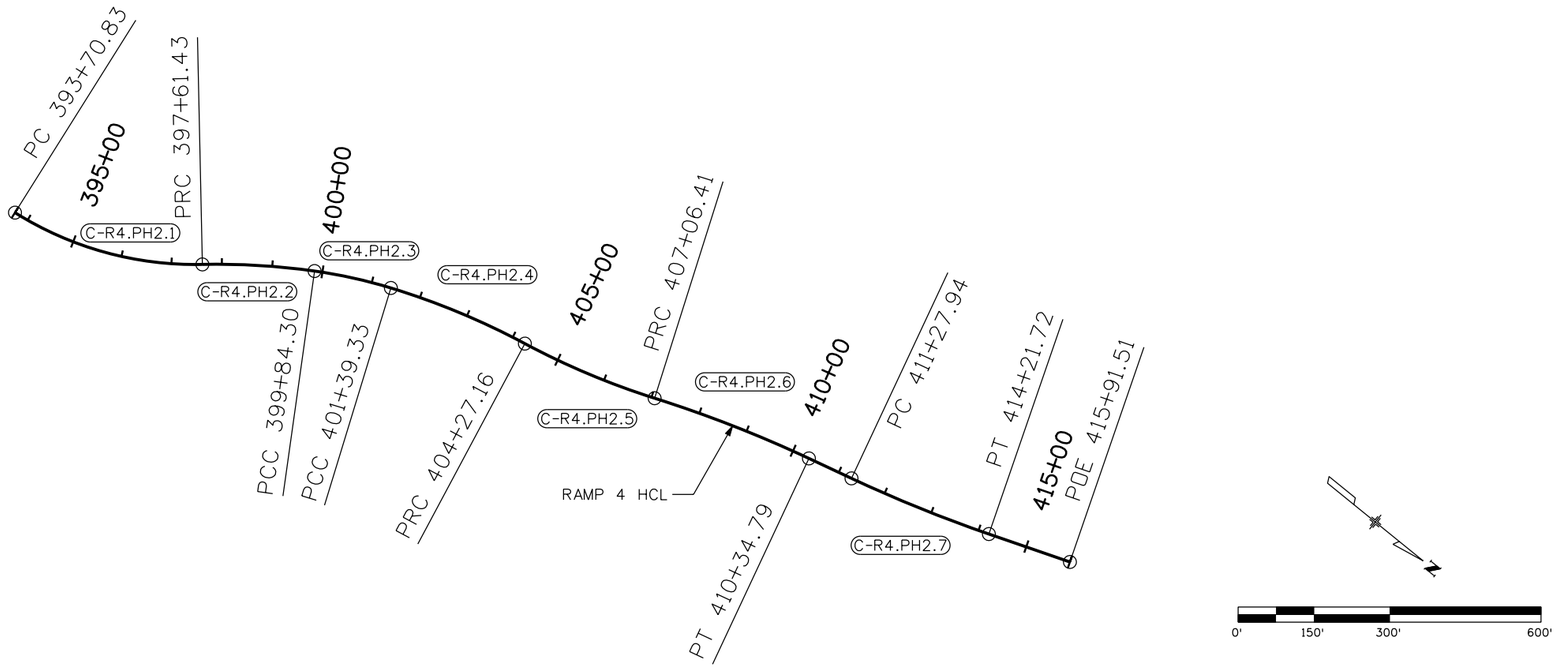

CONTROL LINE DATA - Ramp 4 PH2 HCL

POINT ID (1)	BEARING	DISTANCE (FEET)	NORTHING (Y)	EASTING (X)	PC	PI	PT	DELTA	R	L	T
PI C-R4.PH2.1	N 40°14'24" W	568.245 '	679777.4906	960989.2513	393+70.831		397+61.427	33°21'25"	-670.908 '	390.596 '	201.008 '
PI C-R4.PH2.2	N 31°00'25" W	406.737 '	680016.1767	960787.2601	397+61.427		399+84.296	9°13'59"	1383.000 '	222.869 '	111.676 '
PI C-R4.PH2.3	N 22°00'58" W	529.931 '	680178.4730	960689.7163	399+84.296		401+39.332	8°59'27"	988.000 '	155.036 '	77.678 '
PI C-R4.PH2.4	N 10°53'45" W	423.621 '	680384.3268	960606.479	401+39.332		404+27.162	11°07'13"	1483.000 '	287.829 '	144.368 '
PI C-R4.PH2.5	N 21°28'40" W	468.397 '	680663.5928	960552.7224	404+27.162		407+06.415	10°34'55"	-1512.000 '	279.253 '	140.025 '
PI C-R4.PH2.6	N 13°54'57" W	257.576 '	680946.9014	960441.2511	407+06.415		410+34.787	7°33'43"	2488.000 '	328.372 '	164.425 '
PI C-R4.PH2.7	N 19°59'02" W	316.814 '	681339.6329	960343.9455	411+27.938		414+21.724	6°04'05"	-2774.000 '	293.787 '	147.031 '
POE			681637.3716	960235.6729		415+91.508					

(1) SEE CURVE DATA TABLE ON SHEET GM-10

Print Date: 9/27/2010
File Name: 16311DES_PH2_GeomPlan6.dgn
Horiz. Scale: 1:300 Vert. Scale: As Noted
Unit Information Unit Leader Initials

FELSBURG HOLT & ULLEVIG 6300 South Syracuse Way Centennial, CO 80111

Sheet Revisions		
Date:	Comments	Init.

Colorado Department of Transportation
DEPARTMENT OF TRANSPORTATION
2000 South Holly Street
Denver, CO 80222
Phone: 303-972-9112 FAX: 303-972-9114
Region 6 RLB

As Constructed
No Revisions:
Revised:
Void:

I-25/SANTA FE INTERCHANGE
RAMP 4 HCL
GEOMETRIC PLAN

Designer: SPG
Detailer: SYS
Sheet Subset: ROADWAY
Structure Numbers:
Subset Sheets: GM-6 of 10

Project No./Code
IM 0254-394
16311
Sheet Number 40

Stan 9:40:01 AM K:\08276\16311\Phase 2\Design\Drawings\16311DES_PH2_GeomPlan6.dgn
9/27/2010 CDOT-PDFDraftQuality_XM.pltcfg CDOT-PenTable.tbl

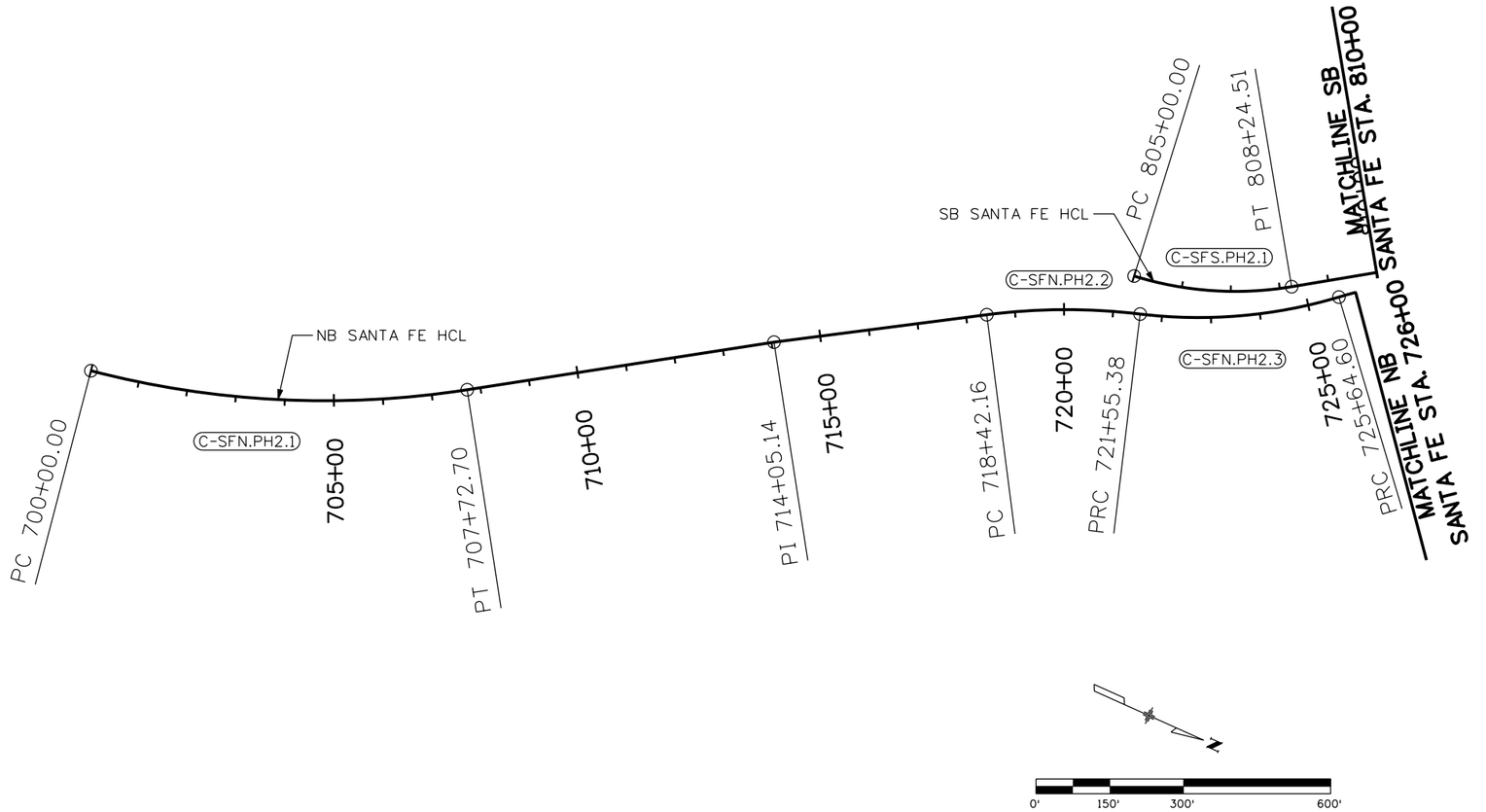

Print Date: 9/27/2010		Sheet Revisions			Colorado Department of Transportation	As Constructed	I-25/SANTA FE INTERCHANGE NB & SB SANTA FE HCL GEOMETRIC PLAN		Project No./Code
File Name: 16311DES_PH2_GeomPlan7.dgn		Date:	Comments	Init.	2000 South Holly Street Denver, CO 80222 Phone: 303-972-9112 FAX: 303-972-9114	No Revisions:			IM 0254-394
Horiz. Scale: 1:300 Vert. Scale: As Noted						Revised:	Designer: SPG	Structure Numbers	16311
Unit Information Unit Leader Initials							Detailer: SYS		
FELSBURG HOLT & ULLEVIG 6300 South Syracuse Way Centennial, CO 80111					Region 6 RLB	Void:	Sheet Subset: ROADWAY	Subset Sheets: GM-7 of 10	Sheet Number 41

Stan 9:40:04 AM K:\08276\16311\Phase 2\Design\Drawings\16311DES_PH2_GeomPlan7.dgn
9/27/2010 CDOT-PDFDraftQuality_XM.pltcfg CDOT-PenTable.tbl

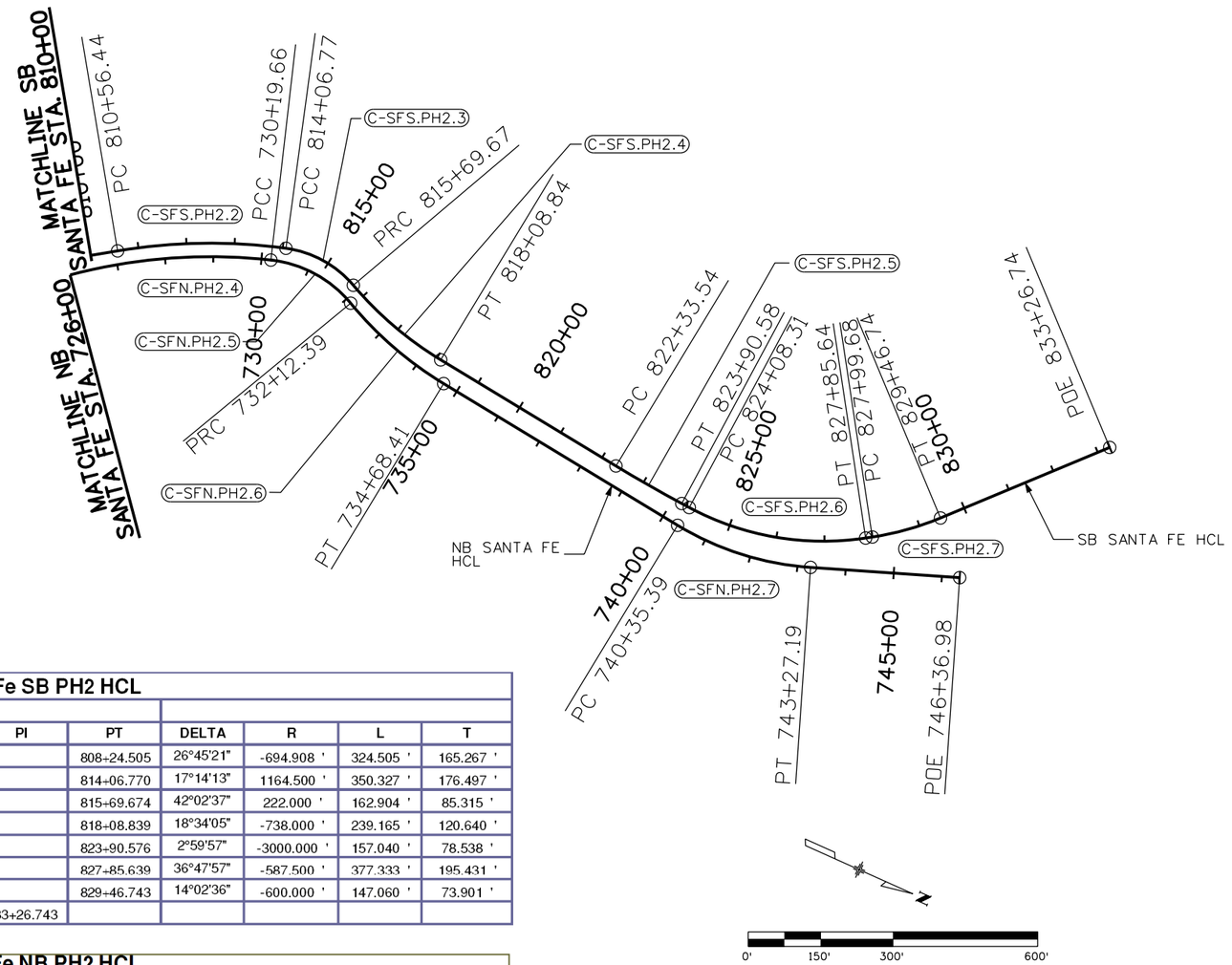

(1) SEE CURVE DATA TABLE ON SHEET GM-10

CONTROL LINE DATA - Santa Fe SB PH2 HCL

POINT ID (1)	BEARING	DISTANCE (FEET)	NORTHING (Y)	EASTING (X)	PC	PI	PT	DELTA	R	L	T
PI C-SFS.PH2.1	N 33°38'19" W	482.519 '	679744.8832	961017.3616	805+00.000		808+24.505	26°45'21"	-694.908 '	324.505 '	165.267 '
PI C-SFS.PH2.2	N 16°24'07" W	339.400 '	680222.5167	960699.5577	810+56.443		814+06.770	17°14'13"	1164.500 '	350.327 '	176.497 '
PI C-SFS.PH2.3	N 25°38'30" E	324.480 '	680473.6739	960625.6292	814+06.770		815+69.674	42°02'37"	222.000 '	162.904 '	85.315 '
PI C-SFS.PH2.4	N 7°04'26" E	545.337 '	680659.3460	960714.7550	815+69.674		818+08.839	18°34'05"	-738.000 '	239.165 '	120.640 '
PI C-SFS.PH2.5	N 4°04'29" E	96.268 '	681278.4723	960791.5841	822+33.536		823+90.576	2°59'57"	-3000.000 '	157.040 '	78.538 '
PI C-SFS.PH2.6	N 32°43'29" W	209.475 '	681569.4344	960812.3109	824+08.306		827+85.639	36°47'57"	-587.500 '	377.333 '	195.431 '
PI C-SFS.PH2.7	N 46°46'05" W	453.901 '	681807.8318	960659.1173	827+99.683		829+46.743	14°02'36"	-600.000 '	147.060 '	73.901 '
POE			682118.7333	960328.4120		833+26.743					

CONTROL LINE DATA - Santa Fe NB PH2 HCL

POINT ID	BEARING	DISTANCE (FEET)	NORTHING (Y)	EASTING (X)	PC	PI	PT	DELTA	R	L	T
PI C-SFN.PH2.1	N 32°57'13" W	1024.258 '	678106.8759	962017.1722	700+00.000		707+72.705	23°25'29"	-1890.000 '	772.705 '	391.825 '
PI	N 31°28'44" W	437.019 '	678966.3414	961460.015		714+05.138					
PI C-SFN.PH2.2	N 17°17'32" W	668.078 '	679473.2949	961149.6104	718+42.157		721+55.378	14°11'12"	1265.000 '	313.221 '	157.415 '
PI C-SFN.PH2.3	N 40°44'19" W	791.807 '	679821.73	961041.1373	721+55.378		725+64.598	23°26'48"	-1000.000 '	409.220 '	207.514 '
PI C-SFN.PH2.4	N 17°47'50" W	423.356 '	680153.7011	960755.2066	725+64.598		730+19.659	22°56'30"	1136.500 '	455.061 '	230.620 '
PI C-SFN.PH2.5	N 26°22'29" E	357.459 '	680469.8729	960653.7122	730+19.659		732+12.395	44°10'19"	250.000 '	192.736 '	101.443 '
PI C-SFN.PH2.6	N 7°04'26" E	696.212 '	680676.537	960756.1874	732+12.395		734+68.411	19°18'03"	-760.000 '	256.016 '	129.233 '
PI C-SFN.PH2.7	N 20°11'59" W	458.508 '	681515.0346	960860.2389	740+35.391		743+27.187	27°16'25"	-613.000 '	291.796 '	148.717 '
POE			681945.3422	960701.9191		746+36.978					

Stan 9:40:06 AM K:\08276\16311\Phase 2\Design\Drawings\16311DES_PH2_GeomPlan8.dgn
9/27/2010 CDOT-PDFDraftQuality_XM.pltcfg CDOT-PenTable.tbl

Print Date: 9/27/2010
File Name: 16311DES_PH2_GeomPlan8.dgn
Horiz. Scale: 1:300 Vert. Scale: As Noted
Unit Information Unit Leader Initials

FELSBURG HOLT & ULLEVIG 6300 South Syracuse Way Centennial, CO 80111

Sheet Revisions		
Date:	Comments	Init.

Colorado Department of Transportation
DEPARTMENT OF TRANSPORTATION
2000 South Holly Street
Denver, CO 80222
Phone: 303-972-9112 FAX: 303-972-9114
Region 6 RLB

As Constructed
No Revisions:
Revised:
Void:

I-25/SANTA FE INTERCHANGE
NB & SB SANTA FE HCL
GEOMETRIC PLAN

Designer: SPG
Detailer: SYS
Sheet Subset: ROADWAY
Structure Numbers:
Subset Sheets: GM-8 of 10

Project No./Code
IM 0254-394
16311
Sheet Number 42

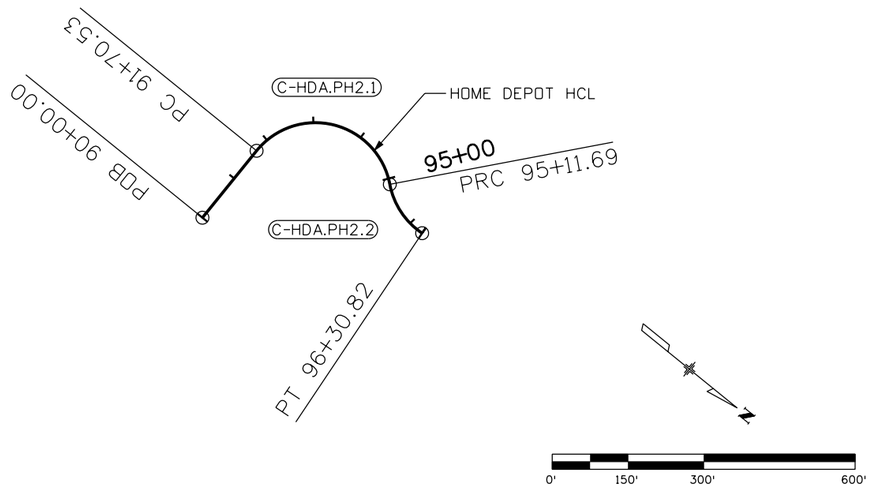

CONTROL LINE DATA - Home Depot PH2 HCL

POINT ID (1)	BEARING	DISTANCE (FEET)	NORTHING (Y)	EASTING (X)	PC	PI	PT	DELTA	R	L	T
POB	S 89°58'03" W	170.530 '	680736.5387	961204.2399		90+00.000					
PI C-HDA.PH2.1	N 40°16'48" E	443.111 '	680736.2575	960709.7296	91+70.530		95+11.688	130°18'45"	150.000 '	341.157 '	323.980 '
PI C-HDA.PH2.2	N 5°13'29" W	'	681031.4119	960959.8611	95+11.688		96+30.819	45°30'17"	-150.000 '	119.131 '	62.908 '

(1) SEE CURVE DATA TABLE ON SHEET GM-10

Print Date: 9/27/2010
File Name: 16311DES_PH2_GeomPlan9.dgn
Horiz. Scale: 1:300 Vert. Scale: As Noted
Unit Information Unit Leader Initials

FELSBURG HOLT & ULLEVIG 6300 South Syracuse Way Centennial, CO 80111

Sheet Revisions

Date:	Comments	Init.

Colorado Department of Transportation
DEPARTMENT OF TRANSPORTATION
2000 South Holly Street
Denver, CO 80222
Phone: 303-972-9112 FAX: 303-972-9114
Region 6 RLB

As Constructed
No Revisions:
Revised:
Void:

I-25/SANTA FE INTERCHANGE
HOME DEPOT HCL
GEOMETRIC PLAN

Designer: SPG
Detailer: SYS
Sheet Subset: ROADWAY
Structure Numbers:
Subset Sheets: GM-9 of 10

Project No./Code
IM 0254-394
16311
Sheet Number 43

Stan 9:40:10 AM K:\08276\16311\Phase 2\Design\Drawings\16311DES_PH2_GeomPlan9.dgn
9/27/2010 CDOT-PDFDraftQuality_XM.pltcfg CDOT-PenTable.tbl

I-25 / SANTA FE CURVE DATA TABLE

CURVE	CENTRAL ANGLE (degree)	RADIUS AT HCL (feet)	DEGREE OF CURVE (degree)	DIRECTION OF HCL CURVE	DIRECTION OF TRAFFIC CURVE	e (design) (percent)	SPEED (MPH)	STOPPING SIGHT DISTANCE (feet)	NOTE
I-25 MAINLINE									
C-I25.1	23deg30'06"	1637.00	03deg30'00"	left	left / right	6.00	-	-	existing curve
C-I25.2	49deg18'02"	1775.00	03deg13'41"	right	left / right	6.00	55.00	498.00	hor. sight distance controls speed
C-I25.3	05deg21'29"	6820.00	00deg50'24"	left	left / right	2.00	55.00	987.00	super at reverse crown slope
C-I25.4	01deg09'27"	44000.00	00deg07'49"	left	left / right	+/- 2.00	65.00	2515.00	normal crown - min. length controls (future)
C-I25.5	23deg06'25"	1800.00	03deg10'59"	left	left / right	6.00	55.00	499.00	sight distance controls speed (future)
C-I25.2L	49deg18'02"	1788.00	03deg12'16"	right	left	6.00	55.00	498.00	13 ft left offset from C-I25.2
C-I25.2R	49deg18'02"	1762.00	03deg15'06"	right	right	6.00	55.00	498.00	13 ft right offset from C-I25.2
RAMP 1									
C-R1.1	20deg20'55"	2012.00	02deg50'52"	right	right	3.00	45.00	432.00	from NB Santa Fe
C-R1.2	19deg06'09"	1160.00	04deg56'21"	left	left	3.40	40.00	305.00	hor. sight distance controls speed
RAMP 2									
C-R2.1	27deg54'16"	1200.00	04deg46'29"	right	right	3.60	45.00	387.00	match NB I-25
C-R2.2.1	07deg28'31"	1000.00	05deg43'46"	right	right	2.00	45.00	353.00	to Santa Fe
C-R2.PH2.1	13deg53'01"	850.00	06deg44'26"	right	right	2.00	45.00	397.00	to Santa Fe
C-R2.PH2.2	52deg15'25"	278.00	20deg36'36"	right	right	2.00	25.00	244.00	to Santa Fe
C-R2.PH2.3	36deg36'35"	262.00	21deg52'07"	left	left	-2.00	20.00	-	to Santa Fe
C-R2.PH2.4	78deg54'37"	149.55	38deg18'44"	left	left	-2.00	15.00	-	to Santa Fe
RAMP 3									
C-R3.1	05deg35'39"	2015.00	02deg50'36"	left	right	-2.00	55.00	499.00	match SB I-25
C-R3.PH2.1	16deg33'00"	1050.00	05deg27'24"	right	left	2.00	50.00	431.00	portion of 'ultimate' curve C-R3.2 to SB I-25
C-R3.PH2.2	25deg34'10"	500.00	11deg27'33"	right	left	-2.00	30.00	-	SB Santa FE auxiliary lane to SB I-25
RAMP 4									
C-R4.PH2.1	33deg21'25"	670.91	08deg32'24"	left	right	-	-	-	existing curve
C-R4.PH2.2	09deg13'59"	1383.00	04deg08'34"	right	left	-	-	-	existing curve
C-R4.PH2.3	08deg59'27"	988.00	05deg47'57"	right	left	-	-	-	existing curve
C-R4.PH2.4	11deg07'13"	1483.00	03deg51'49"	right	left	-	-	-	existing curve
C-R4.PH2.5	10deg34'55"	1512.00	03deg47'22"	left	right	2.00	45.00	409.00	transiton to existing ramp to SB Santa Fe
C-R4.PH2.6	07deg33'43"	2488.00	02deg18'10"	right	left	-2.00	55.00	496.00	transiton to existing ramp to SB Santa Fe
C-R4.PH2.7	06deg04'05"	2774.00	02deg03'56"	left	right	2.00	55.00	555.00	portion of 'ultimate' curve C-R4.3 to SB Santa Fe
SANTA FE NB									
C-SFN.PH2.1	23deg25'29"	1890.00	03deg01'53"	left	left	-	-	-	existing curve
C-SFN.PH2.2	14deg11'12"	1265.00	04deg31'46"	right	right	-	-	-	existing curve
C-SFN.PH2.3	23deg26'48"	1000.00	05deg43'46"	left	left	-2.00	35.00	252.00	hor. sight distance controls speed
C-SFN.PH2.4	22deg56'30"	1136.50	05deg02'29"	right	right	2.00	35.00	267.00	hor. sight distance controls speed
C-SFN.PH2.5	44deg10'19"	250.00	22deg55'06"	right	right	2.00	25.00	211.00	alignment between bridge piers
C-SFN.PH2.6	19deg18'03"	760.00	07deg32'20"	left	left	-2.00	35.00	246.00	hor. sight distance controls speed
C-SFN.PH2.7	27deg16'25"	613.00	09deg20'48"	left	left	-	-	-	existing curve
SANTA FE SB									
C-SFS.PH2.1	26deg45'21"	694.91	08deg14'42"	left	right	2.00	40.00	-	abuts SB I-25 ramp to SB Santa Fe
C-SFS.PH2.2	17deg14'13"	1164.50	04deg55'13"	right	left	2.00	50.00	330.00	hor. sight distance controls speed
C-SFS.PH2.3.	42deg02'37"	222.00	25deg48'32"	right	left	2.00	25.00	152.00	hor. sight distance controls speed
C-SFS.PH2.4	18deg34'05"	738.00	07deg45'49"	left	right	2.00	30.00	214.00	hor. sight distance controls speed
C-SFS.PH2.5	02deg59'57"	3000.00	01deg54'35"	left	right	-	-	-	existing curve
C-SFS.PH2.6	36deg47'57"	587.50	09deg45'09"	left	right	-	-	-	existing curve
C-SFS.PH2.7	14deg02'36"	600.00	09deg32'57"	left	right	-	-	-	existing curve
HOME DEPOT									
C-HDA.PH2.1	130deg18'45"	150.00	38deg11'50"	right	left	-2.00	20.00	-	to Home Depot and I-25 Frontage Road
C-HDA.PH2.2	45deg30'17"	150.00	38deg11'50"	left	right	2.00	20.00	-	to Home Depot and I-25 Frontage Road

Print Date: 9/27/2010
File Name: 16311DES_PH2_GeomPlan10.dgn
Horiz. Scale: 1:300 Vert. Scale: As Noted
Unit Information Unit Leader Initials

FELSBURG HOLT & ULLEVIG 6300 South Syracuse Way Centennial, CO 80111

Sheet Revisions

Date:	Comments	Init.

Colorado Department of Transportation
DEPARTMENT OF TRANSPORTATION
2000 South Holly Street
Denver, CO 80222
Phone: 303-972-9112 FAX: 303-972-9114
Region 6 RLB

As Constructed
No Revisions:
Revised:
Void:

I-25/SANTA FE INTERCHANGE
GEOMETRIC PLAN
HORIZONTAL CURVE TABLE

Designer: SPG
Detailer: SYS
Sheet Subset: ROADWAY
Structure Numbers:
Subset Sheets: GM-10 of 10

Project No./Code
IM 0254-394
16311
Sheet Number 44

Stan 9:40:12 AM K:\08276\16311\Phase 2\Design\Drawings\16311DES_PH2_GeomPlan10.dgn
9/27/2010 CDOT-PDFDraftQuality_XM.pltcfg CDOT-PenTable.tbl

TABULATION OF ROADWAY REMOVAL ITEMS

STATION / LOCATION	202-00090 REMOVAL OF DELINEATOR	202-00190 REMOVAL OF CONCRETE MEDIAN COVER MATERIAL	202-00195 REMOVAL OF MEDIAN COVER	202-00200 REMOVAL OF SIDEWALK	202-00203 REMOVAL OF CURB AND GUTTER	202-00206 REMOVAL OF CURB RAMP	202-00210 REMOVAL OF CONCRETE PAVEMENT	202-00220 REMOVAL OF ASPHALT MAT	202-00895 REMOVAL OF IMPACT ATTENUATOR	202-01130 REMOVAL OF GUARD RAIL TYPE 3	202-01170 REMOVAL OF GUARD RAIL TYPE 7	202-01300 REMOVAL OF END ANCHORAGE
	EA	SY	SY	SY	LF	SY	SY	SY	EA	LF	LF	EA
I-25 MAINLINE	25	235			315		\	42500	2		3680	
RAMPS	25		405		1320			5510	2	340	1770	4
SANTA FE	25	535	1790	55	6815	20		16350		3520		13
HOME DEPOT			315		2295			3500				
I-25 FRONTAGE ROAD					135		100	410				
PROJECT TOTALS	**75**	**770**	**2510**	**55**	**10880**	**20**	**100**	**68270**	**4**	**3860**	**5450**	**17**

Stan 9:40:16 AM K:\08276\16311\Phase 2\Design\Drawings\16311DES_PH2_TabRemovals.dgn
9/27/2010 CDOT-PDFDraftQuality_XM.pltcfg CDOT-PenTable.tbl

Print Date: 9/27/2010
File Name: 16311DES_PH2_TabRemovals.dgn
Horiz. Scale: 1:1 Vert. Scale: As Noted
Unit Information Unit Leader Initials

FELSBURG HOLT & ULLEVIG 6300 South Syracuse Way Centennial, CO 80111

Sheet Revisions

Date:	Comments	Init.

Colorado Department of Transportation
DEPARTMENT OF TRANSPORTATION
2000 South Holly Street
Denver, CO 80222
Phone: 303-972-9112 FAX: 303-972-9114
Region 6 RLB

As Constructed
No Revisions:
Revised:
Void:

I-25/SANTA FE INTERCHANGE
TABULATION OF
ROADWAY REMOVAL ITEMS

Designer: SPG
Detailer: SYS
Sheet Subset: TABS
Structure Numbers:
Subset Sheets: TB-1 of 4

Project No./Code
IM 0254-394
16311
Sheet Number 45

TABULATION OF ROADWAY ITEMS

STATION / LOCATION	507-00000 CONCRETE SLOPE AND DITCH PAVING	606-00301 GUARD RAIL TYPE 3 (6'-3" SPACING)	606-00710 GUARD RAIL TYPE 7 (STYLE CA)	606-00725 GUARD RAIL TYPE 7 (STYLE CC) (CONCRETE GLARE SCREEN)	606-00740 GUARD RAIL TYPE 7 (STYLE CE)	606-00745 GUARD RAIL TYPE 7 (STYLE CE) (CONCRETE GLARE SCREEN)	606-01340 END ANCHORAGE 3D	606-01370 END ANCHORAGE 3G	606-01380 END ANCHORAGE 3H	609-21020 CURB AND GUTTER TYPE 2 (SECTION II-B)	609-24006 GUTTER TYPE 2 (6 FOOT)	614-85001 IMPACT ATTENUATOR	630-80376 GUARD RAIL TYPE 7 (TEMPORARY)	630-80376 IMPACT ATTENUATOR (TEMPORARY)	606-02003 END ANCHORAGE (NONFLARED)
	CY	LF	LF	LF	LF	LF	EA	EA	EA	LF	LF	EA	LF	EA	EA
I-25 MAINLINE	124	300	673	555	444	1774	1		1			2			
RAMP 1		810	356		80		1	1	2			1	451		
RAMP 2			397										1337		
RAMP 3			614										586		
RAMP 4			928			1							1524		
SANTA FE (NB & SB)	19	500	170				2			217			5686	3	2
HOME DEPOT ACCESS ROAD													206		
I-25 FRONTAGE ROAD											128				
PROJECT TOTALS	**143**	**1610**	**3138**	**555**	**524**	**1775**	**4**	**1**	**3**	**217**	**128**	**3**	**9790**	**3**	**2**

Print Date: 9/27/2010
File Name: 16311DES_PH2_TabRoadway.dgn
Horiz. Scale: 1:1 Vert. Scale: As Noted
Unit Information Unit Leader Initials

FELSBURG HOLT & ULLEVIG 6300 South Syracuse Way Centennial, CO 80111

Sheet Revisions		
Date:	Comments	Init.

Colorado Department of Transportation
DEPARTMENT OF TRANSPORTATION
2000 South Holly Street
Denver, CO 80222
Phone: 303-972-9112 FAX: 303-972-9114
Region 6 RLB

As Constructed
No Revisions:
Revised:
Void:

I-25/SANTA FE INTERCHANGE
TABULATION OF ROADWAY ITEMS

Designer: SPG
Detailer: SYS
Sheet Subset: TABS
Structure Numbers:
Subset Sheets: TB-2 of 4

Project No./Code
IM 0254-394
16311
Sheet Number 46

Stan 9:40:18 AM K:\08276\16311\Phase 2\Design\Drawings\16311DES_PH2_TabRoadway.dgn
9/27/2010 CDOT-PDFDraftQuality_XM.pltcfg CDOT-PenTable.tbl

TABULATION OF PAVING ITEMS

STATION / LOCATION	304-06000 AGGREGATE BASE COURSE (CLASS 6)	403-33871 HOT MIX ASPHALT (Gr S) (100)(64-22)	403-33871 HOT MIX ASPHALT (Gr SX) (100)(76-28)	411-10255 EMULSIFIED ASPHALT (SLOW SETTING)	412-00800 CONCRETE PAVEMENT (8 INCH)	412-01300 CONCRETE PAVEMENT (13 INCH)
	TON	TON	TON	GAL	SY	SY
I-25 MAINLINE	13625					41373
RAMP 1	1780	380	160	175		2555
RAMP 2	4565	1445	645	875		
RAMP 3	2110	595	300	405		
RAMP 4	2915	975	330	445		1855
SANTA FE (NB & SB)	13540	6110	2040	2780		
HOME DEPOT ACCESS ROAD	990	315	145	190		
I-25 FRONTAGE ROAD	880	270	125	165	100	
PROJECT TOTALS	**40405**	**10090**	**3745**	**5035**	**100**	**45783**

Stan 9:40:21 AM K:\08276\16311\Phase 2\Design\Drawings\16311DES_PH2_TabPaving.dgn
9/27/2010 CDOT-PDFDraftQuality_XM.pltcfg CDOT-PenTable.tbl

Print Date: 9/27/2010
File Name: 16311DES_PH2_TabPaving.dgn
Horiz. Scale: 1:1 Vert. Scale: As Noted
Unit Information Unit Leader Initials

FELSBURG HOLT & ULLEVIG 6300 South Syracuse Way Centennial, CO 80111

Sheet Revisions

Date:	Comments	Init.

Colorado Department of Transportation
DOT DEPARTMENT OF TRANSPORTATION
2000 South Holly Street
Denver, CO 80222
Phone: 303-972-9112 FAX: 303-972-9114
Region 6 RLB

As Constructed
No Revisions:
Revised:
Void:

I-25/SANTA FE INTERCHANGE
TABULATION OF PAVING ITEMS

Designer: SPG
Detailer: SYS
Sheet Subset: TABS
Structure Numbers:
Subset Sheets: TB-3 of 4

Project No./Code
IM 0254-394
16311
Sheet Number 47

TABULATION OF EARTHWORK

INDEX BOOK	INDEX PAGE	INDEX SHEET	ITEM	PROJECT TOTALS	
			UNCLASSIFIED EXCAVATION (CIP) 203-00010	CU. YDS.	
			ROADWAY (FROM CROSS-SECTIONS)		
			INTERSTATE 25 AND RAMPS	X	
			SANTA FE	X	
			STRUCTURAL EXCAVATION ADJUSTMENT	X	
			EXISTING PAVEMENT ADJUSTMENT	X	
			SUBTOTAL	0	
			TOTAL FOR PAY QUANTITY	**0**	

(FOR INFORMATION ONLY)

			EMBANKMENT MATERIAL (CIP)	CU. YDS.	
			ROADWAY (FROM CROSS-SECTIONS)		
			INTERSTATE 25 AND RAMPS	X	
			SANTA FE	X	
			STRUCTURAL BACKFILL ADJUSTMENT	X	
			EXISTING PAVEMENT ADJUSTMENT	X	
			SUBTOTAL	0	
			TOTAL	0	
			COMPACTION		
			(MOISTURE & DENSITY CONTROL)		
			EMBANKMENT (NET)	0	
			BASES OF CUTS & FILLS	0	
			TOTAL	0	
			WETTING QUANTITIES	M. GAL.	
			COMPACTION		
			(0 x 0.040 M. GAL./yd)	0	
			TOTAL	0	
			ROADWAY QUANTITIES BALANCE	CU. YDS.	
			EMBANKMENT (NET)	0	
			EMBANKMENT X FACTOR (1.15)	0	
			EMBANKMENT REQUIRED FOR SHRINKAGE		
			BASES OF CUTS & FILLS	0	
			BALANCE TOTAL	0	
			UNCLASSIFIED EXCAVATION	0	
			TO BE DISPOSED OF BY CONTRACTOR	0	
			BALANCE TOTAL	0	

Print Date: 9/27/2010
File Name: 16311DES_PH2_TabEarthwork.dgn
Horiz. Scale: 1:1 Vert. Scale: As Noted
Unit Information Unit Leader Initials

FELSBURG HOLT & ULLEVIG 6300 South Syracuse Way Centennial, CO 80111

Sheet Revisions

Date:	Comments	Init.

Colorado Department of Transportation
DEPARTMENT OF TRANSPORTATION
2000 South Holly Street
Denver, CO 80222
Phone: 303-972-9112 FAX: 303-972-9114
Region 6 RLB

As Constructed
No Revisions:
Revised:
Void:

I-25/SANTA FE INTERCHANGE
TABULATION OF EARTHWORK

Designer: DCS
Detailer: DCS
Sheet Subset: TABS
Structure Numbers:
Subset Sheets: TB-4 of 4

Project No./Code
IM 0254-394
16311
Sheet Number 48

Stan 9:40:24 AM K:\08276\16311\Phase 2\Design\Drawings\16311DES_PH2_TabEarthwork.dgn
9/27/2010 CDOT-PDFDraftQuality_XM.pltcfg CDOT-PenTable.tbl

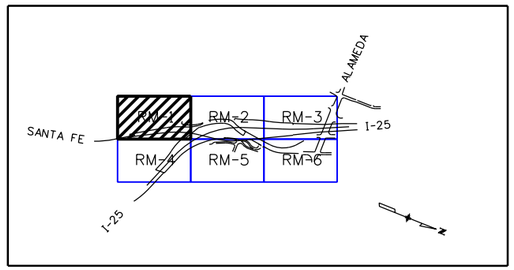

MAPKEY

LEGEND

1. REMOVE ASPHALT MAT
2. REMOVE CURB & GUTTER
3. REMOVE CURB, GUTTER, WALK, AND RAMP
4. REMOVE END ANCHORAGE
5. REMOVE GUARDRAIL TYPE 3
6. REMOVE TYPE 7 BARRIER

REMOVAL OF ASPHALT MAT

ROADWAY REMOVAL NOTES

1. THESE 'ROADWAY REMOVAL PLANS ONLY DEPICT ROADWAY REMOVAL BID ITEMS IDENTIFIED ON THE 'ROADWAY REMOVAL TABULATION SHEETS. SEE OTHER PLANS SHEETS AND TABULATION SHEETS FOR VARIOUS OTHER REQUIRED REMOVALS FOR THE PROJECT.
2. ALL ROADWAY ITEMS IDENTIFIED AND TABULATED TO BE REMOVED SHALL BE REMOVED FROM THE PROJECT SITE, AND MAY NOT BE BURIED ON-SITE UNLESS AUTHORIZED BY THE ENGINEER.
3. ALL CUTTING OF PAVEMENT, CURB AND GUTTER, SIDEWALK, AND OTHER ROADWAY ITEMS TO BE BY SAW CUT ONLY. SAW CUTTING WILL NOT BE PAID FOR SEPARATELY, BUT TO BE INCLUDED IN THE REMOVAL ITEMS.
4. ALL CONFLICTING DELINEATORS WITHIN THE PROJECT SITE SHALL BE REMOVED BY THE CONTRACTOR. DELINEATORS REQUIRED TO BE REMOVED HAVE NOT BE SPECIFICALLY IDENTIFIED.
5. SEE THE CONSTRUCTION PHASING PLANS FOR OTHER ROADWAY ITEMS REQUIRED TO BE REMOVED TO ACCOMMODATE THE CONSTRUCTION PHASING.
6. SEE ROADWAY PLANS FOR REMOVAL LIMITS.

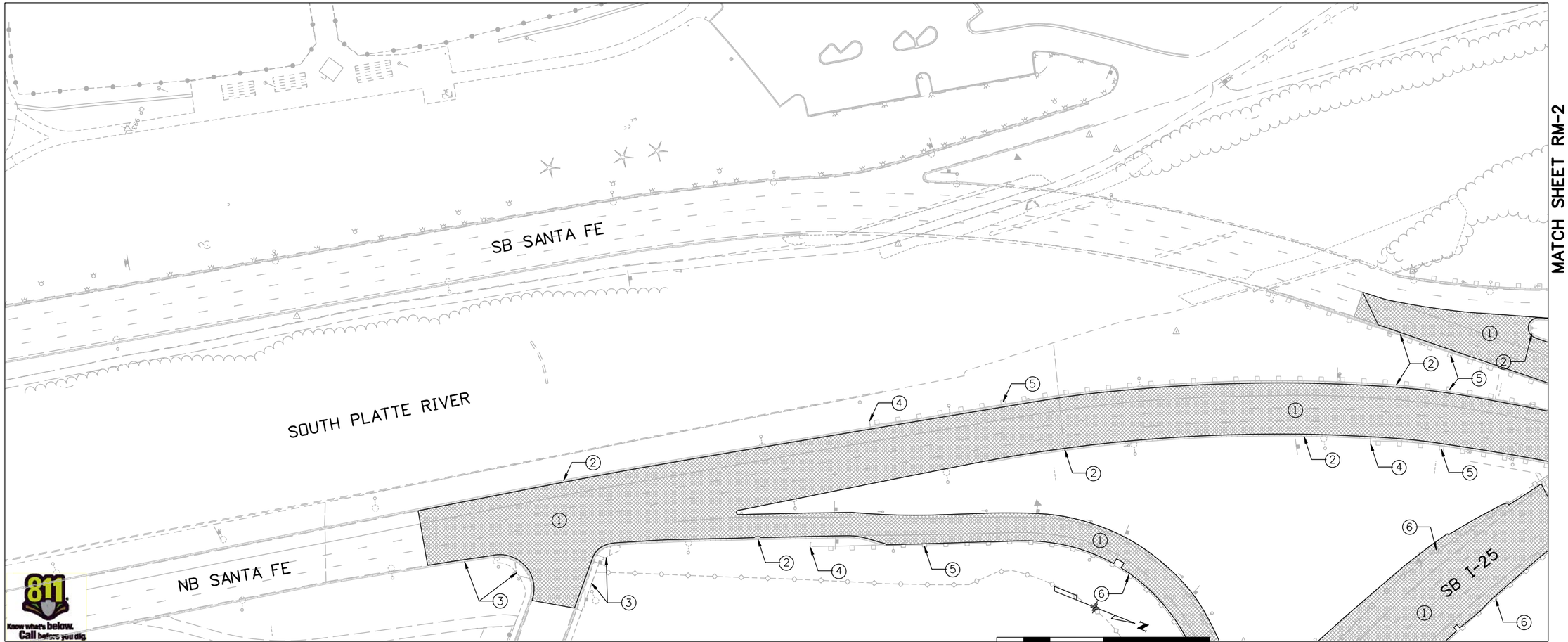

Print Date: 9/27/2010		Sheet Revisions			Colorado Department of Transportation	As Constructed
File Name: 16311DES_PH2_Removal1.dgn		Date:	Comments	Init.	2000 South Holly Street Denver, CO 80222 Phone: 303-972-9112 FAX: 303-972-9114	No Revisions:
Horiz. Scale: 1:100 Vert. Scale: As Noted					Region 6 RLB	Revised:
Unit Information Unit Leader Initials						Void:
FELSBURG HOLT & ULLEVIG 6300 South Syracuse Way Centennial, CO 80111						

I-25/SANTA FE INTERCHANGE ROADWAY REMOVAL PLAN			Project No./Code
			IM 0254-394
Designer: SPG	Structure Numbers		16311
Detailer: SYS			Sheet Number 49
Sheet Subset: ROADWAY	Subset Sheets: RM-1 of 6		

Stan 9:40:29 AM K:\08276\16311\Phase 2\Design\Drawings\16311DES_PH2_Removal1.dgn
9/27/2010 CDOT-PDFDraftQuality_XM.pltcfg CDOT-PenTable.tbl

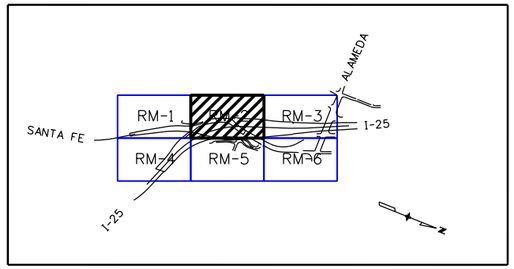

MAPKEY

LEGEND

1. REMOVE ASPHALT MAT
2. REMOVE CURB & GUTTER
3. REMOVE GUARDRAIL TYPE 3
4. REMOVE TYPE 7 BARRIER
5. REMOVE END ANCHORAGE
6. REMOVE IMPACT ATTENUATOR
7. REMOVE MEDIAN COVER MATERIAL
8. SEE BRIDGE PLANS FOR BRIDGE REMOVAL

REMOVAL OF ASPHALT MAT

SOUTH PLATTE RIVER

MATCH SHEET RM-1

MATCH SHEET RM-3

RAMP 4

SB I-25

SB SANTA FE

NB SANTA FE

NB I-25

MATCH SHEET RM-5

0' 50' 100' 200'

811 Know what's below. Call before you dig.

Print Date: 9/27/2010
File Name: 16311DES_PH2_Removal2.dgn
Horiz. Scale: 1:100 Vert. Scale: As Noted
Unit Information Unit Leader Initials

FELSBURG HOLT & ULLEVIG 6300 South Syracuse Way Centennial, CO 80111

Sheet Revisions		
Date:	Comments	Init.

Colorado Department of Transportation
DOT DEPARTMENT OF TRANSPORTATION
2000 South Holly Street
Denver, CO 80222
Phone: 303-972-9112 FAX: 303-972-9114
Region 6 RLB

As Constructed
No Revisions:
Revised:
Void:

I-25/SANTA FE INTERCHANGE
ROADWAY REMOVAL PLAN

Designer: SPG
Detailer: SYS
Sheet Subset: ROADWAY
Structure Numbers
Subset Sheets: RM-2 of 6

Project No./Code
IM 0254-394
16311
Sheet Number 50

Stan 9:40:33 AM K:\08276\16311\Phase 2\Design\Drawings\16311DES_PH2_Removal2.dgn
9/27/2010 CDOT-PDFDraftQuality_XM.pltcfg CDOT-PenTable.tbl

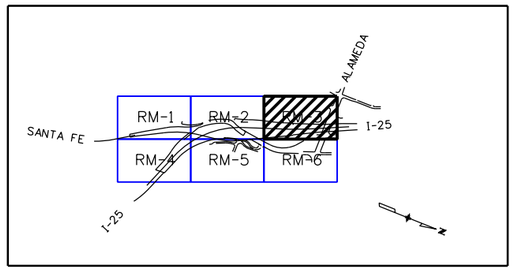

MAPKEY

LEGEND

1. REMOVE ASPHALT MAT
2. REMOVE TYPE 7 BARRIER
3. REMOVE GUARDRAIL TYPE 3
4. REMOVE END ANCHORAGE

REMOVAL OF ASPHALT MAT

SOUTH PLATTE RIVER

ALAMEDA AVE.

SB I-25

NB I-25

MATCH SHEET RM-2

MATCH SHEET RM-6

Know what's below. Call before you dig.

0' 50' 100' 200'

Stan 9:40:38 AM K:\08276\16311\Phase 2\Design\Drawings\16311DES_PH2_Removal3.dgn
9/27/2010 CDOT-PDFDraftQuality_XM.pltcfg CDOT-PenTable.tbl

Print Date: 9/27/2010
File Name: 16311DES_PH2_Removal3.dgn
Horiz. Scale: 1:100 Vert. Scale: As Noted
Unit Information Unit Leader Initials

FELSBURG HOLT & ULLEVIG 6300 South Syracuse Way Centennial, CO 80111

Sheet Revisions		
Date:	Comments	Init.

Colorado Department of Transportation
DEPARTMENT OF TRANSPORTATION
2000 South Holly Street
Denver, CO 80222
Phone: 303-972-9112 FAX: 303-972-9114
Region 6 RLB

As Constructed
No Revisions:
Revised:
Void:

I-25/SANTA FE INTERCHANGE
ROADWAY REMOVAL PLAN

Designer: SPG
Detailer: SYS
Sheet Subset: ROADWAY
Structure Numbers
Subset Sheets: RM-3 of 6

Project No./Code
IM 0254-394
16311
Sheet Number 51

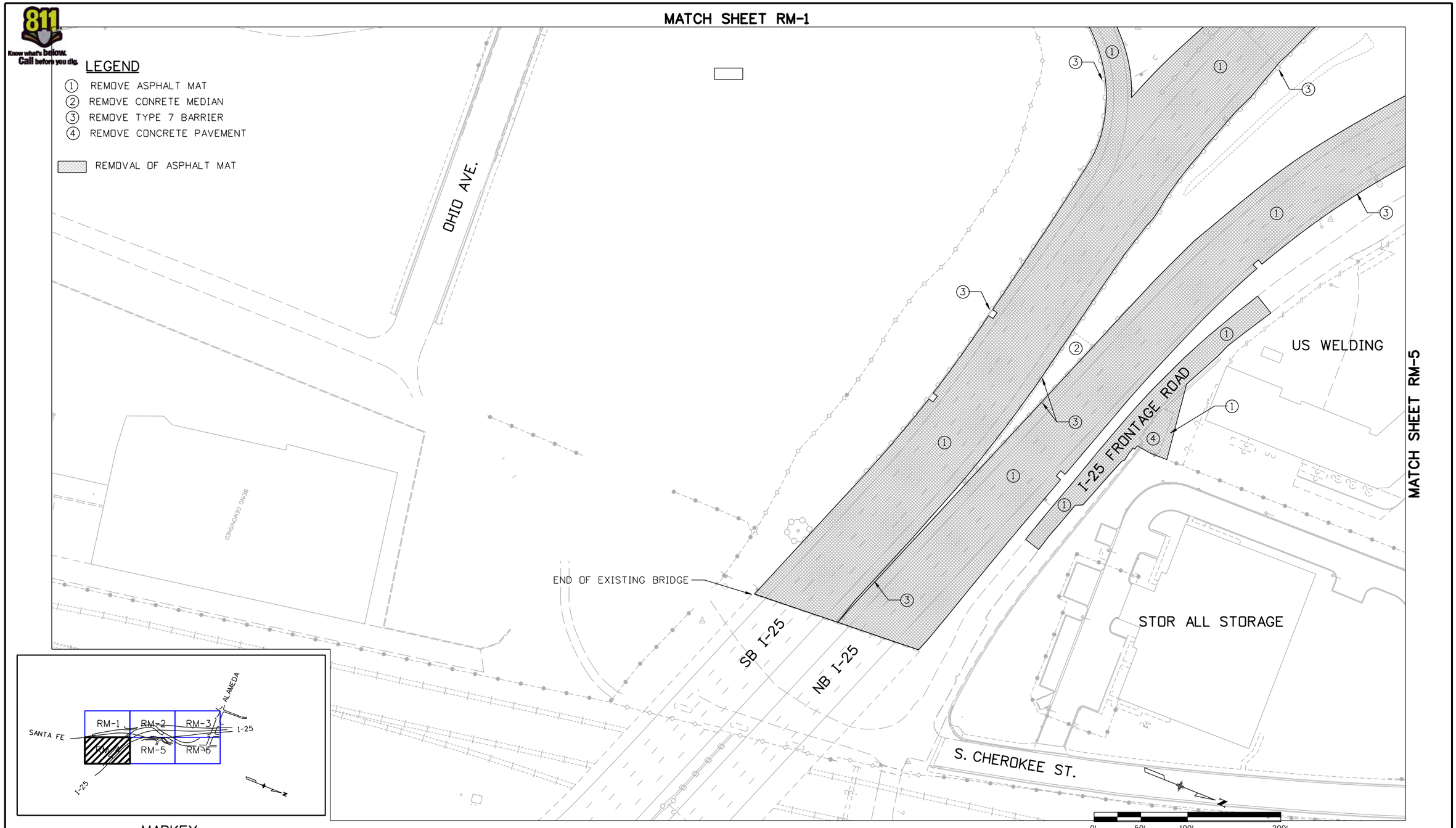

Print Date: 9/27/2010
File Name: 16311DES_PH2_Removal4.dgn
Horiz. Scale: 1:100 Vert. Scale: As Noted
Unit Information Unit Leader Initials

FELSBURG HOLT & ULLEVIG 6300 South Syracuse Way Centennial, CO 80111

Sheet Revisions		
Date:	Comments	Init.

Colorado Department of Transportation
DOT DEPARTMENT OF TRANSPORTATION
2000 South Holly Street
Denver, CO 80222
Phone: 303-972-9112 FAX: 303-972-9114
Region 6 RLB

As Constructed
No Revisions:
Revised:
Void:

I-25/SANTA FE INTERCHANGE
ROADWAY REMOVAL PLAN

Designer: SPG
Detailer: SYS
Sheet Subset: ROADWAY
Structure Numbers
Subset Sheets: RM-4 of 6

Project No./Code
IM 0254-394
16311
Sheet Number 52

Stan 9:40:44 AM K:\08276\16311\Phase 2\Design\Drawings\16311DES_PH2_Removal4.dgn
9/27/2010 CDOT-PDFDraftQuality_XM.pltcfg CDOT-PenTable.tbl

MATCH SHEET RM-2

MATCH SHEET RM-4

MATCH SHEET RM-6

NB I-25

SB SANTA FE

NB SANTA FE

HOME DEPOT ACCESS ROAD

US WELDING

HOME DEPOT

LIMIT OF REMOVALS
(STA. 96+30.82)

LEGEND

1. REMOVE ASPHALT MAT
2. REMOVE CURB & GUTTER
3. REMOVE CONCRETE MEDIAN
4. REMOVE MEDIAN COVER MATERIAL

REMOVAL OF ASPHALT MAT

0' 50' 100' 200'

MAPKEY

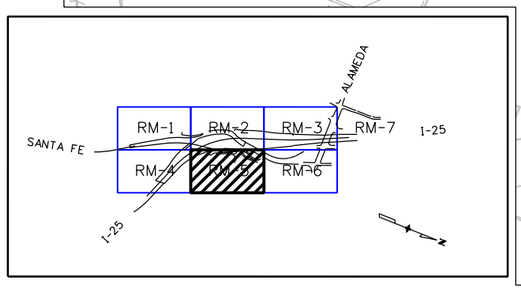

Print Date: 9/27/2010
File Name: 16311DES_PH2_Removal5.dgn
Horiz. Scale: 1:100 Vert. Scale: As Noted
Unit Information Unit Leader Initials

FELSBURG HOLT & ULLEVIG 6300 South Syracuse Way Centennial, CO 80111

Sheet Revisions		
Date:	Comments	Init.

Colorado Department of Transportation
2000 South Holly Street
Denver, CO 80222
Phone: 303-972-9112 FAX: 303-972-9114
Region 6 RLB

As Constructed
No Revisions:
Revised:
Void:

I-25/SANTA FE INTERCHANGE
ROADWAY REMOVAL PLAN

Designer: SPG
Detailer: SYS
Sheet Subset: ROADWAY
Structure Numbers:
Subset Sheets: RM-5 of 6

Project No./Code
IM 0254-394
16311
Sheet Number 53

Stan 9:40:48 AM K:\08276\16311\Phase 2\Design\Drawings\16311DES_PH2_Removal5.dgn
9/27/2010 CDOT-PDFDraftQuality_XM.pltcfg CDOT-PenTable.tbl

Know what's below. Call before you dig.

MATCH SHEET RM-3

MATCH SHEET RM-5

SB SANTA FE

NB SANTA FE

ALAMEDA AVE.

NB SANTA FE

PP

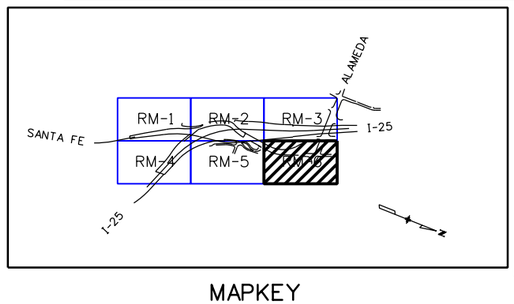

MAPKEY

LEGEND

1. REMOVE ASPHALT MAT
2. REMOVE CURB & GUTTER
3. REMOVE TYPE 7 BARRIER
4. REMOVE MEDIAN COVER MATERIAL

REMOVAL OF ASPHALT MAT

0' 50' 100' 200'

Stan 9:40:53 AM K:\08276\16311\Phase 2\Design\Drawings\16311DES_PH2_Removal6.dgn
9/27/2010 CDOT-PDFDraftQuality_XM.pltcfg CDOT-PenTable.tbl

Print Date: 9/27/2010		Sheet Revisions			Colorado Department of Transportation
File Name: 16311DES_PH2_Removal6.dgn		Date:	Comments	Init.	2000 South Holly Street Denver, CO 80222 Phone: 303-972-9112 FAX: 303-972-9114
Horiz. Scale: 1:100 Vert. Scale: As Noted					Region 6 RLB
Unit Information Unit Leader Initials					
FELSBURG HOLT & ULLEVIG 6300 South Syracuse Way Centennial, CO 80111					

As Constructed	I-25/SANTA FE INTERCHANGE ROADWAY REMOVAL PLAN			Project No./Code
No Revisions:				IM 0254-394
Revised:	Designer: SPG	Structure Numbers		16311
Void:	Detailer: SYS			Sheet Number 54
	Sheet Subset: ROADWAY	Subset Sheets: RM-6 of 6		

GENERAL ENVIRONMENTAL NOTES:

1. IF CONSTRUCTION IS TO OCCUR DURING THE NESTING SEASON FOR MIGRATORY BIRDS (BETWEEN APRIL 1 AND AUGUST 31), ALL NESTS NEED TO BE KNOCKED DOWN IN TREES IDENTIFIED FOR REMOVALPRIOR TO APRIL 1 AND THENEVERY THREE (3) DAYS UNTIL CONSTRUCTION BEGINS. THIS INCLUDES SWALLOW NESTS ON THE BRIDGE STRUCTURE AND NESTS IN TREES THAT ARE SCHEDULED TO BE REMOVED. BIRDS THAT BUILD NESTS DURING CONSTRUCTION DO SO OF THEIR OWN ACCORD AND THOSE NESTS DO NOT NEED TO BE KNOCKED DOWN. IF CONSTRUCTION BEGINS OUTSIDE OF THE NESTING SEASON, NESTS DO NOT NEED TO BE KNOCKED DOWN. THIS PROCEDURE SHALL BE INCLUDED IN THE COST OF WORK AND SHALL NOT BE PAID FOR SEPARATELY.

2. THERE ARE SEVERAL AREAS OF PALEONTOLOGICAL CONCERN WITHIN THE LIMITS OF THIS PROJECT, WITHIN WHICH PROJECT EXCAVATIONS COULD UNCOVER FOSSILS. THE CONTRACTOR WILL COMPLY WITH THE PROJECT SPECIAL SECTION 107 SPECIFICATION. WHEN PROJECT EXCAVATION IS ANTICIPATED, THE CDOT PALEONTOLOGIST, STEVE WALLACE, WILL BE NOTIFIED A MINIMUM OF 10 WORKING DAYS IN ADVANCE. THE PALEONTOLOGIST CAN BE CONTACTED AT (303) 757-9632 (OFFICE) OR (303) 562-4201 (CELL). CONSTRUCTION MONITORING WILL LIKELY BE INTERMITTENT, WITH ACTUAL LOCATIONS AND DURATION OF MONITORING DETERMINED ON SITE BY THE CDOT PALEONTOLOGIST AS CONSTRUCTION PROGRESSES.

3. THE CONTRACTOR SHALL PERFORM CONSTRUCTION ACTIVITIES TO AVOID UNNECESSARY IMPACTS TO EXISTING VEGETATION, INCLUDING TREES AND SHRUBS. PROTECTIVE FENCING WILL BE USED TO IDENTIFY THESE AREAS, AS NOTED ON THE EROSION CONTROLSHEETS. ANY DISTURBANCE BEYOND THESE LIMITS SHALL BE RESTORED TO ORIGINAL CONDITIONS BY THE CONTRACTOR AT THEIR OWN EXPENSE. TREES NOT DESIGNATED FOR REMOVAL WILL BE PROTECTED BY FENCE (PLASTIC). LOCATION OF TREE PROTECTION SHALL BE DIRECTED BY THE CDOT REGION 6 LANDSCAPE ARCHITECT, WETLANDS BIOLOGIST AND ENGINEER. THE CONTRACTOR SHALL NOT PARK ANY VEHICLES OR EQUIPMENT OR DISTURB ANY AREA NOT APPROVED BY THE ENGINEER.

4. THE CONTRACTOR SHALL PROPERLY REVEGETATE ALL DISTURBED AREAS. NATIVE GRASSES AND FORBS SHOULD BE USED ON ALL CDOT RIGHT-OF-WAY FOR REVEGETATIVE PURPOSES. DISTURBED AREAS WILL BE RECLAIMED AS SOON AS CONSTRUCTION IS FINISHED AND SEEDED USING A PERMANENT SEED MIXTURE AS DETAILED IN THE STORMWATER MANAGEMENT PLAN (SWMP). IF AREAS ARE COMPLETED AND PERMANENT SEEDING CAN NOT OCCUR DUE TO THE TIME OF YEAR, MULCH AND MULCH TACKIFIER WILL BE USED FOR TEMPORARY EROSION CONTROL UNTIL SEEDING CAN OCCUR. RESEEDING WILL CONSIST OF NATIVE GRASSES AND FORBS, AND SEEDING WILL BE PHASED THROUGHOUT CONSTRUCTION (AS APPROPRIATE) TO MINIMIZE THE AMOUNT OF OPEN GROUND.FERTILIZER WILL NOT BE USED IN SEEDED AREAS BECAUSE IT CAN ENHANCE THE GROWTH OF NOXIOUS WEEDS AT THE EXPENSE OF DESIRED VEGETATION.

5. THE CONTRACTOR SHALL PROVIDE THE ENGINEER WITH A DUST CONTROL PLAN THAT DETAILS METHODS FOR MITIGATION OF FUGITIVE DUST RESULTING FROM THE WORK, INCLUDING DUST FROM THE BRIDGE. THE DUST CONTROL PLAN SHALL BE APPROVED BY THE ENGINEER PRIOR TO WORK COMMENCEMENT.

WATER SHALL BE USED AS A DUST PALLIATIVE WHERE REQUIRED. LOCATIONS SHALL BE AS DIRECTED BY THE ENGINEER. WATER FOR A DUST PALLIATIVE WILL NOT BE PAID FOR SEPARATELY, BUT SHALL BE INCLUDED IN THE WORK. CONTAMINATED GROUNDWATER CANNOT BE USED AS A DUST PALLIATIVE.

GENERAL ENVIRONMENTAL NOTES CONT'D:

6. A STATE DEMOLITION PERMIT (ISSUED BY CDPHE INDOOR AIR QUALITY UNIT) WILL BE REQUIRED. CONTRACTOR MUST OBTAIN THE PERMIT AT LEAST TEN (10) BUSINESS DAYS PRIOR TO RELATED DEMOLITION. CDOT PROPERTY MANAGEMENT HAS PREVIOUSLY TESTED THE STRUCTURES FOR ASBESTOS AND LEAD . THE RESULTS OF THESE TESTS SHALL BE INCLUDED BY THE CONTRACTOR AS A PART OF THE APPLICATION. TEST RESULTS CAN BE FOUND IN THE AESBESTOS AND LIMITED LEAD-BASED INSPECTION REPORT IN REVISION OF SECTION 02 PROJECT PLANS AND OTHER DATA. A PARTIALLY COMPLETED DEMOLITION PERMIT APPLICATION (WITH THE ASBESTOS INSPECTOR'S CERTIFICATION AND SIGNATURE) CAN BE OBTAINED FROM THE ASBESTOS INSPECTION CONTRACTOR- CONTACT INFORMATION SHOWN ON THE ASBESTOS INSPECTION REPORT PROVIDED TO THE CONTRACTOR. THE CONTRACTOR IS RESPONSIBLE FOR ALL COSTS ASSOCIATED WITH THE APPLICATION FOR AND MAINTENANCE OF THIS PERMIT.

7. THE CONTRACTOR IS ADVISED THAT SOIL AND GROUNDWATER HAS BEEN TESTED AND FOUND TO BE CONTAMINATED IN VARIOUS LOCATIONS WITHIN THE PROJECT LIMITS. A SUMMARY OF THE TEST RESULTS CAN BE FOUND IN THE MATERIALS MANAGEMENT RECOMMENDATION LISTED IN REVISION OF SECTION 102 PROJECTPLANS AND OTHER DATA.

8. A CDPHE DEWATERING PERMIT MUST BE OBTAINED BY THE CONTRACTOR FROM THE COLORADO DEPARTMENT OF PUBLIC HEALTH AND ENVIRONMENT (CDPHE) WATER QUALITY CONTROL DIVISION (WQCD) IF GROUNDWATER IS DISCHARGED FROM THE EXCAVATION SITE TO ANY WATER OF THE STATE OR IF KNOWN TO BE CONTAMINATED. THE CONTRACTOR IS RESPONSIBLE FOR ALL COSTS ASSOCIATED WITH THE APPLICATION AND MAINTENANCE OF THIS PERMIT.

9. GROUNDWATER WITHIN THE PROJECT LIMITS HAS THE POTENTIAL TO CONTAIN CERTAIN CHEMICAL COMPOUNDS AT CONCENTRATIONS GREATER THAN THAT ACCEPTABLE FOR DIRECT DISCHARGE UNDER STANDARD CDPHE DEWATERING PERMITS. THE CONTRACTOR IS ADVISED TO LIMIT PUMPING OF GROUNDWATER IN ALL PROJECT EXCAVATIONS BY CAREFUL SCHEDULING, EXPIDITING THE WORK, AND USE OF CONSCIENTIOUS CONSTRUCTION METHODS. THE CONTRACTOR SHALL MINIMIZE THE DISTURBANCE OF CONTAMINATED GROUNDWATER BY AVOIDANCE AND LIMIT INTRUSION OF GROUNDWATER INTO EXCAVATIONS.

10. COSTS INCURRED BY THE CONTRACTOR FOR THE REMOVAL, SAMPLE COLLECTION, ANALYTICAL TESTING, CONTAINERIZATION, TRANSPORTATION AND DISPOSAL OR TREATMENT OF CONTAMINATED GROUNDWATER WILL BE PAID FOR UNDER FORCE ACCOUNT ENVIRONMENTAL HEALTH AND SAFETY MANAGEMENT.

11. REMOVAL, SAMPLE COLLECTION, CONTAINERIZATION, TRANSPORTATION AND DISPOSAL OF CONTAMINATED SOIL WILL BE PAID FOR IN ACCORDANCE WITH SECTION 250, ENVIRONMENTAL HEALTH AND SAFETY MANAGEMENT

12. ANALYTICAL TESTING OF SOIL WILL BE PAID FOR UNDER FORCE ACCOUNT ENVIRONMENTAL, HEALTH AND SAFETY MANAGEMENT.

13. A STATE CERTIFIED ASBESTOS BUILDING INSPECTOR (CABI) SHALL INSPECT FOR THE PRESENCE OF ASBESTOS DURING SUBSURFACE WORK ON POTENTIALLY ASBESTOS CONTAINING MATERIALS OR WHEN BUILDING/CONSTRUCTION DEBRIS IS ENCOUNTERED. IF ASBESTOS IS FOUND, ALL FURTHER WORK (SOIL-RELATED) SHALL PROCEED IN ACCORDANCE WITH THE SECTION 250, ENVIRONMENTAL HEALTH AND SAFETY MANAGEMENT, THE AIR QUALITY CONTROL COMMISSION REGULATION NO. 8 PART B AND THE CDPHE HAZARDOUS MATERIALS WASTE MANAGEMENT DIVISION SECTION 5.5 OF THE REGULATIONS (6 CCR 1007-2). INSPECTION AND MANAGEMENT WILL BE PAID FOR UNDER FORCE ACCOUNT ENVIRONMENTAL, HEALTH AND SAFETY MANAGEMENT.

14. SEVERAL CDPHE TEST WELLS ARE LOCATED WITHIN PROJECT LIMITS. ONE MONITORING WELL, MW-14 LOCATED SOUTH OF ALAMEDA AND WEST OF I-25 WILL BE ABANDONED. ABANDONMENT SHALL BE DONE IN ACCORDANCE WITH SUBSECTION 202.02 OF THE STANDARD SPECIFICATIONS. MONITORING WELL XXX IS LOCATED XXX. CARE SHALL BE TAKEN NOT TO DISTURB THE WELL LOCATIONS ANDACCESS TO THE WELL SHALL BE MAINTAINED. REFER TO ENVIRONMENTAL PLANS FOR WELL LOCATIONS.

GENERAL ENVIRONMENTAL NOTES, CONT'D:

15. THIS PROJECT IS COVERED UNDER A COLORADO DISCHARGE PERMIT SYSTEM STORMWATER CONSTRUCTION PERMIT (CDPS-SCP). ALL PERMIT REQUIREMENTS SHALL BEADHERED TO BY THE CONTRACTOR. CDOT WILL OBTAIN THE CDPS-SCP PRIOR TO ADVERTISEMENT AND WILL TRANSFER IT TO THE CONTRACTOR UPON AWARD OF THIS PROJECT. THE CONTRACTOR SHALL NOT COMMENCE WORK UNTIL THE CDPS-SCP IS IN THEIR NAME AND A COPY OF THE PERMIT HAS BEEN SUBMITTED TO THE PROJECT ENGINEER. THE COSTS FOR HOLDING THIS PERMIT WILL NOT BE PAID FOR SEPARATELY BUT SHALL BE INCLUDED IN THE PRICE OF THE WORK. UPON SATISFACTORY COMPLETION AND ACCEPTANCE OF THE WORK THE CONTRACTOR SHALL COORDINATE WITH THE CDOT REGIONAL WATER QUALITY POLLUTION CONTROL MANAGER TO TRANSFER THE PERMIT BACK TO CDOT. PROJECT STAFF SHOULD BE READY TO COMPLETE A BRIEF QUESTIONNAIRE CONCERNING WATER QUALITY AND EROSION CONTROL ON THEIR PROJECTAT SOME POINT DURING THEIR PILOT PROJECT.

NOXIOUS WEEDS

NOXIOUS WEED MANAGEMENT SHALL BE THE RESPONSIBILITY OF THE CONTRACTOR AND FOLLOW THE PROCEDURES IDENTIFIED IN PROJECT SPECIAL SECTION 217 HERBICIDE TREATMENT. ONLY A COLORADO LICENSED SUPERVISOR OR CERTIFIED OPERATOR WILL APPLY HERBICIDES. ALL HERBICIDES WILL BE APPLIED IN ACCORDANCE WITH THE MANUFACTURER'S INSTRUCTIONS.

IN ADDITION TO THE SPECIFIC MANAGEMENT ACTIONS LISTED FOR EACH SPECIES IN SECTION 217-HERBICIDE TREATMENT, THE FOLLOWING PREVENTATIVE MEASURES SHALL BE IMPLEMENTED TO MINIMIZE THE SPREAD OF NOXIOUS WEEDS IN ALL CONSTRUCTION AREAS:

- THE AREA OF GROUND DISTURBANCE WILL BE KEPT TO THE MINIMUM NECESSARY.
- MINIMIZE IMPORTED TOPSOIL DURING CONSTRUCTION.
- ALL EQUIPMENT WILL BE THOROUGHLY CLEANED BEFORE ENTERING AND EXITING THE PROJECT AREA. CLEANING AND DISPOSAL OF WEED INFESTED SOIL SHALL BE INCLUDED IN THE COST OF THE WORK.
- AREAS WITH DENSE NOXIOUS WEED POPULATIONS WILL NOT BE USED FOR TOPSOIL SALVAGE.
- ALL AREAS PLANNED FOR TOPSOIL SALVAGE WILL BE TREATED FOR NOXIOUS WEEDS PRIOR TO SALVAGE.
- ONLY HERBICIDES APPROVED FOR USE IN WATER WILL BE USED IN OR WITHIN 25 FEET OF WETLANDS OR OTHER WATER FEATURES.
- BROADCAST HERBICIDE SPRAYING WILL ONLY BE APPROVED THROUGH WRITTEN CONSENT OF THE ENGINEER AND SHALL BE APPLIED WHEN WEATHER CONDITIONS (INCLUDING WIND) ARE SUITABLE FOR SUCH WORK.
- ENGINEER WILL BE NOTIFIED 24 HOURS PRIOR TO HERBICIDE APPLICATION.
- THE PROJECT AREA WILL BE SURVEYED FOR NOXIOUS WEEDSTHROUGHOUT CONSTRUCTION TO IDENTIFY AND TREAT WEEDS.

Kate 2:23:30 PM K:\08276\16311\Phase 2\Landscape_Environmental\Drawings\16311LAND_ENV1_PH2_Hab Plan1.dgn
9/27/2010 CDOT-DefaultPrinter_XM.pltcfg CDOT-PenTable.tbl

Print Date: 9/27/2010
File Name: 16311LAND_ENVI_PH2_Hab Plan1.dgn
Horiz. Scale: 1:100 Vert. Scale: As Noted
Unit Information Unit Leader Initials
FELSBURG HOLT & ULLEVIG 6300 South Syracuse Way Centennial, CO 80111

Sheet Revisions

Date:	Comments	Init.

Colorado Department of Transportation
2000 South Holly Street
Denver, CO 80222
Phone: 303-972-9112 FAX: 303-972-9114
Region 6 RLB

As Constructed
No Revisions:
Revised:
Void:

I-25/SANTA FE INTERCHANGE
ENVIRONMENTAL
GENERAL NOTES

Designer: KAB
Detailer: RSA
Sheet Subset: MISC
Structure Numbers:
Subset Sheets: EP-1 of 10

Project No./Code
IM 0254-394
16311
Sheet Number 55

UTILITY INFORMATION SHOWN IS PLOTTED FROM THE BEST AVAILABLE DATA. THE CONTRACTOR IS RESPONSIBLE FOR MAKING THEIR OWN DETERMINATION AS TO THE TYPE AND LOCATION OF UTILITIES AS MAY BE NECESSARY TO AVOID DAMAGE THERETO. CONTACT THE UTILITY NOTIFICATION CENTER OF COLORADO AT 1-800-922-1987 FOR UTILITY LOCATIONS AT LEAST 72 HOURS PRIOR TO EXCAVATING. CONTRACTOR SHALL COORDINATE WITH UTILITY COMPANY FOR ANY UTILITIES THAT NEED RELOCATING.

W. MISSISSIPPI AVE.

W. TENNESSEE AVE.

VANDERBILT PARK

SOUTH PLATTE RIVER

SB SANTA FE

WETLANDS

WETLANDS

WETLANDS

LDA

EXISTING ROW

NB SANTA FE

NB SANTA FE HCL

705+00

MATCHLINE NB SANTA FE STA. 708+00

GATES REDEVELOPMENT

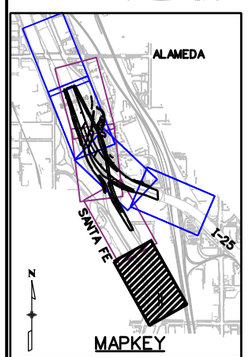

MAPKEY

LEGEND

EXISTING WETLANDS	
DENSE STANDS OF SB40 TREES	
NEST	●
AMERICAN ELM (AE)	✢
PEACHLEAF WILLOW (PW)	●
SIBERIAN ELM (SE)	★
PLAINS COTTONWOOD	PC
LIMITS OF DISTURBANCE	—LDA—

0' 50' 100' 200'

Print Date: 9/27/2010	Sheet Revisions		
File Name: 16311LAND_ENVI_PH2_Hab Plan2.dgn	Date:	Comments	Init.
Horiz. Scale: 1:100 Vert. Scale: As Noted			
Unit Information Unit Leader Initials			
FELSBURG HOLT & ULLEVIG 6300 South Syracuse Way Centennial, CO 80111			

Colorado Department of Transportation
2000 South Holly Street
Denver, CO 80222
Phone: 303-972-9112 FAX: 303-972-9114
Region 6 RLB

As Constructed
No Revisions:
Revised:
Void:

I-25/SANTA FE INTERCHANGE
SB40 TREES, WETLANDS, MIGRATORY BIRD NEST PLAN

Designer: KAB
Detailer: RSA
Sheet Subset: MISC
Structure Numbers:
Subset Sheets: EP-2 of 10

Project No./Code
IM 0254-394
16311
Sheet Number 56

Kate 2:28:22 PM K:\08276\16311\Phase 2\Landscape_Environmental\Drawings\16311LAND_ENVI_PH2_Hab Plan2.dgn
9/27/2010 CDOT-DefaultPrinter_XM.pltcfg CDOT-PenTable.tbl

UTILITY INFORMATION SHOWN IS PLOTTED FROM THE BEST AVAILABLE DATA. THE CONTRACTOR IS RESPONSIBLE FOR MAKING THEIR OWN DETERMINATION AS TO THE TYPE AND LOCATION OF UTILITIES AS MAY BE NECESSARY TO AVOID DAMAGE THERETO. CONTACT THE UTILITY NOTIFICATION CENTER OF COLORADO AT 1-800-922-1987 FOR UTILITY LOCATIONS AT LEAST 72 HOURS PRIOR TO EXCAVATING. CONTRACTOR SHALL COORDINATE WITH UTILITY COMPANY FOR ANY UTILITIES THAT NEED RELOCATING.

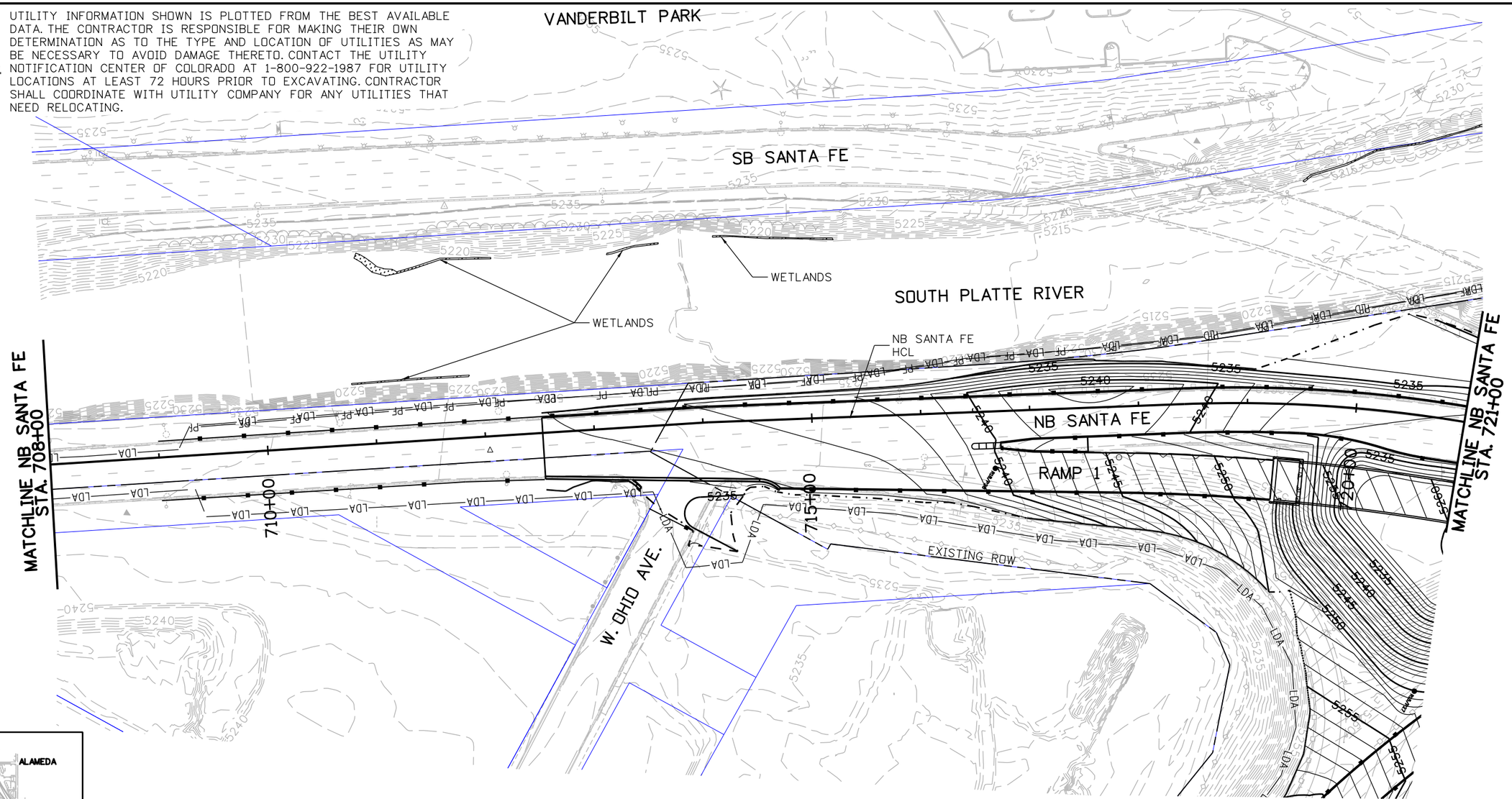

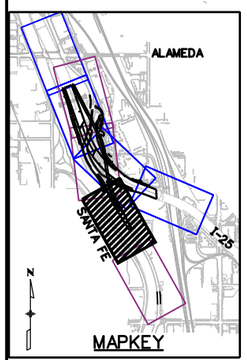

NOTES:
INSTALL PLASTIC CONSTRUCTION FENCE ON WESTERN LIMITS OF DISTURBANCE ALONG SOUTH PLATTE RIVER

LEGEND

EXISTING WETLANDS	
DENSE STANDS OF SB40 TREES	
NEST	●
AMERICAN ELM (AE)	✢
PEACHLEAF WILLOW (PW)	●
SIBERIAN ELM (SE)	★
PLAINS COTTONWOOD	PC
LIMITS OF DISTURBANCE	—LDA—
PLASTIC CONSTRUCTION FENCE	—PF—

0' 50' 100' 200'

Print Date: 9/27/2010	Sheet Revisions		
File Name: 16311LAND_ENVI_PH2_Hab Plan3.dgn	Date:	Comments	Init.
Horiz. Scale: 1:100 Vert. Scale: As Noted			
Unit Information Unit Leader Initials			
FELSBURG HOLT & ULLEVIG 6300 South Syracuse Way Centennial, CO 80111			

Colorado Department of Transportation
2000 South Holly Street
Denver, CO 80222
Phone: 303-972-9112 FAX: 303-972-9114
Region 6 RLB

As Constructed
No Revisions:
Revised:
Void:

I-25/SANTA FE INTERCHANGE
SB40 TREES, WETLANDS, MIGRATORY BIRD NEST PLAN

Designer:	KAB	Structure Numbers	
Detailer:	RSA		
Sheet Subset:	MISC	Subset Sheets: EP-3 of 10	

Project No./Code
IM 0254-394
16311
Sheet Number 57

Kate 2:38:23 PM K:\08276\16311\Phase 2\Landscape_Environmental\Drawings\16311LAND_ENVI_PH2_Hab Plan3.dgn
9/27/2010 CDOT-DefaultPrinter_XM.pltcfg CDOT-PenTable.tbl

UTILITY INFORMATION SHOWN IS PLOTTED FROM THE BEST AVAILABLE DATA. THE CONTRACTOR IS RESPONSIBLE FOR MAKING THEIR OWN DETERMINATION AS TO THE TYPE AND LOCATION OF UTILITIES AS MAY BE NECESSARY TO AVOID DAMAGE THERETO. CONTACT THE UTILITY NOTIFICATION CENTER OF COLORADO AT 1-800-922-1987 FOR UTILITY LOCATIONS AT LEAST 72 HOURS PRIOR TO EXCAVATING. CONTRACTOR SHALL COORDINATE WITH UTILITY COMPANY FOR ANY UTILITIES THAT NEED RELOCATING.

NOTES:
INSTALL ORANGE CONSTRUCTION FENCE ON WESTERN LIMITS OF DISTURBANCEALONG SOUTH PLATTE RIVER

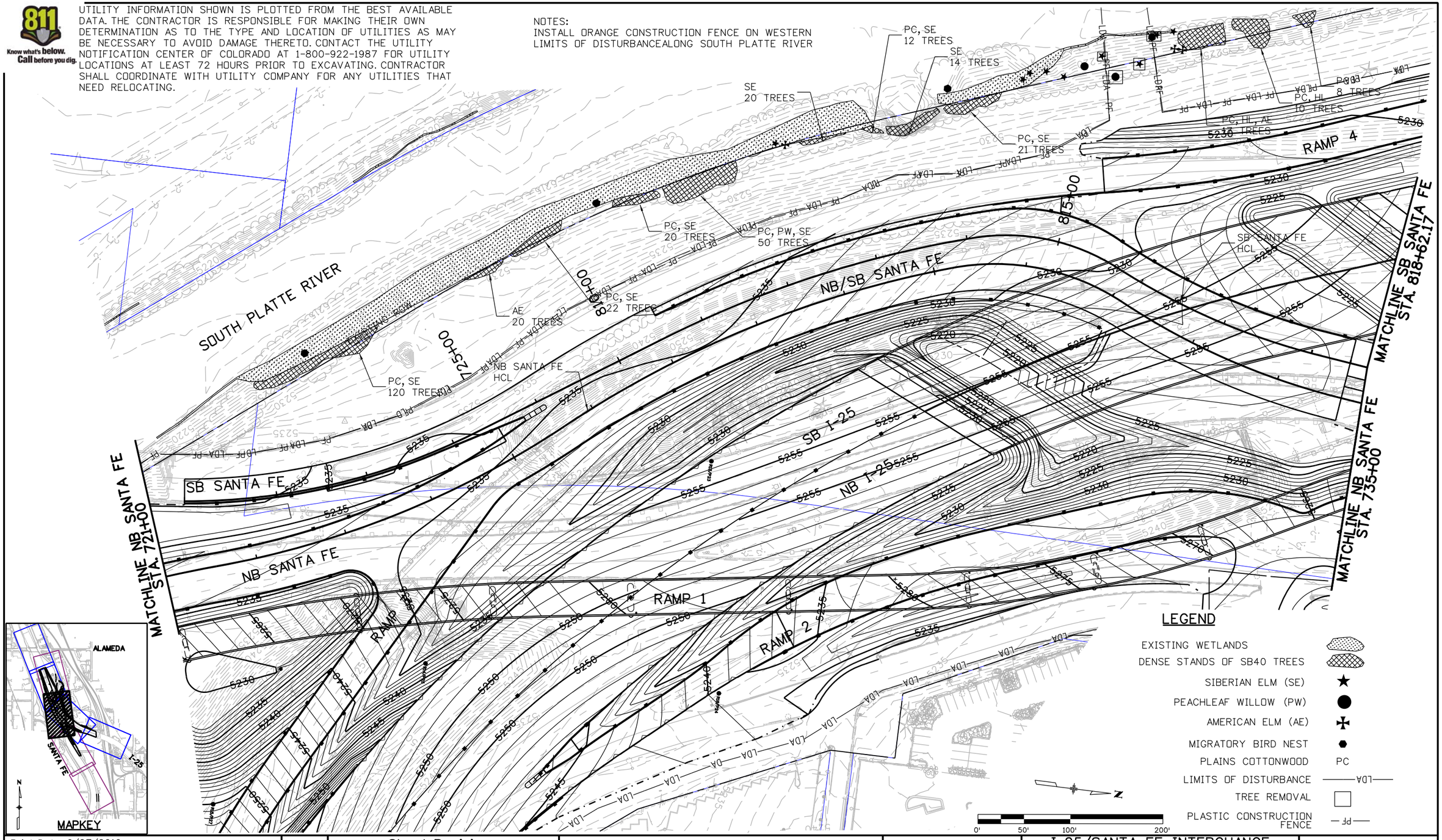

Print Date: 9/27/2010	Sheet Revisions		
File Name: 16311LAND_ENVI_PH2_Hab Plan4.dgn	Date:	Comments	Init.
Horiz. Scale: 1:100 Vert. Scale: As Noted			
Unit Information Unit Leader Initials			
FELSBURG HOLT & ULLEVIG 6300 South Syracuse Way Centennial, CO 80111			

Colorado Department of Transportation
DEPARTMENT OF TRANSPORTATION
2000 South Holly Street
Denver, CO 80222
Phone: 303-972-9112 FAX: 303-972-9114
Region 6 RLB

As Constructed	I-25/SANTA FE INTERCHANGE SB40 TREES, WETLANDS, MIGRATORY BIRD NEST PLAN			Project No./Code
No Revisions:	Designer: KAB	Structure Numbers		IM 0254-394
Revised:	Detailer: RSA			16311
Void:	Sheet Subset: MISC	Subset Sheets: EP-4 of 10		Sheet Number 58

Kate 2:55:09 PM K:\08276\16311\Phase 2\Landscape_Environmental\Drawings\16311LAND_ENVI_PH2_Hab Plan4.dgn
9/27/2010 CDOT-DefaultPrinter_XM.pltcfg CDOT-PenTable.tbl

Know what's below. Call before you dig.

NB SANTA FE

RAMP 1

RAMP 4

SB SANTA FE

PC, SE
22 TREES

PC, SE
20 TREES

PC, PW, SE
50 TREES

PC, PW, SE
24 TREES

SE
20 TREES

PC, SE
12 TREES

SE
14 TREES

EXISTING ROW

RAMP 3

625+00

NB/SB SANTA FE

630+00

I-25 MAINLINE
HCL

SB I-25

NB I-25

RAMP 2

I-25 FRONTAGE ROAD

EXISTING ROW

MATCHLINE I-25 STA. 619+00

MATCHLINE I-25 STA. 632+00

U.S. WELDING

W. CENTER AVE.

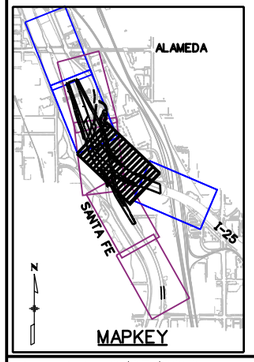

NOTES:
INSTALL ORANGE CONSTRUCTION FENCE ON WESTERN LIMITS OF DISTURBANCEALONG SOUTH PLATTE RIVER

LEGEND

- EXISTING WETLANDS
- DENSE STANDS OF SB40 TREES
- NEST
- AMERICAN ELM (AE)
- PEACHLEAF WILLOW (PW)
- SIBERIAN ELM (SE)
- PLAINS COTTONWOOD (PC)
- LIMITS OF DISTURBANCE (LDA)
- PLASTIC CONSTRUCTION FENCE (PF)

0' 50' 100' 200'

Print Date: 9/27/2010	Sheet Revisions	Colorado Department of Transportation	As Constructed
File Name: 16311LAND_ENVI_PH2_Hab Plan5.dgn	Date: / Comments / Init.	2000 South Holly Street, Denver, CO 80222	No Revisions:
Horiz. Scale: 1:100 Vert. Scale: As Noted		Phone: 303-972-9112 FAX: 303-972-9114	Revised:
Unit Information Unit Leader Initials		Region 6 RLB	Void:
FELSBURG HOLT & ULLEVIG 6300 South Syracuse Way Centennial, CO 80111			

I-25/SANTA FE INTERCHANGE SB40 TREES, WETLANDS, MIGRATORY BIRD NEST PLAN			Project No./Code
Designer: KAB	Structure Numbers		IM 0254-394
Detailer: RSA			16311
Sheet Subset: MISC	Subset Sheets: EP-5 of 10		Sheet Number 59

Kate 3:09:03 PM K:\08276\16311\Phase 2\Landscape_Environmental\Drawings\16311LAND_ENV1_PH2_Hab Plan5.dgn
9/27/2010 CDOT-DefaultPrinter_XM.pltcfg CDOT-PenTable.tbl

UTILITY INFORMATION SHOWN IS PLOTTED FROM THE BEST AVAILABLE DATA. THE CONTRACTOR IS RESPONSIBLE FOR MAKING THEIR OWN DETERMINATION AS TO THE TYPE AND LOCATION OF UTILITIES AS MAY BE NECESSARY TO AVOID DAMAGE THERETO. CONTACT THE UTILITY NOTIFICATION CENTER OF COLORADO AT 1-800-922-1987 FOR UTILITY LOCATIONS AT LEAST 72 HOURS PRIOR TO EXCAVATING. CONTRACTOR SHALL COORDINATE WITH UTILITY COMPANY FOR ANY UTILITIES THAT NEED RELOCATING.

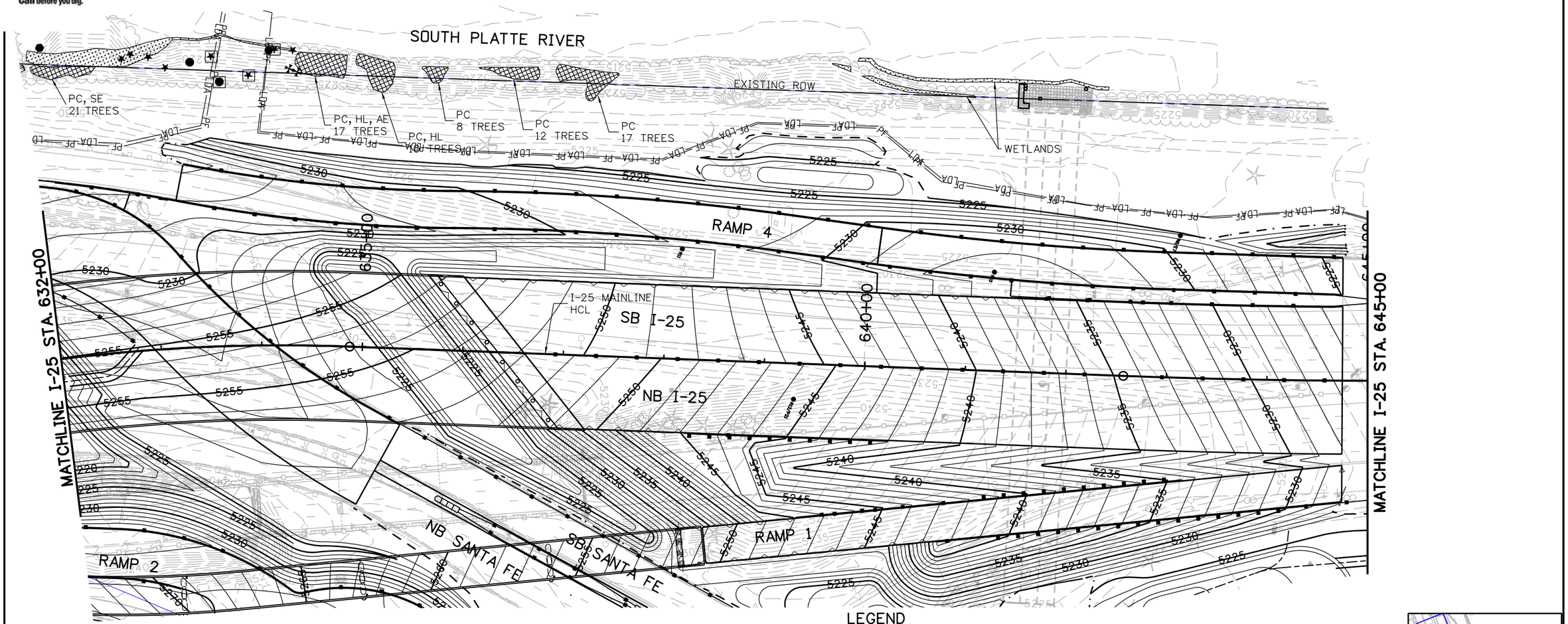

NOTES:
INSTALL ORANGE CONSTRUCTION FENCE ON WESTERN LIMITS OF DISTURBANCEALONG SOUTH PLATTE RIVER

LEGEND

- EXISTING WETLANDS
- DENSE STANDS OF SB40 TREES
- SIBERIAN ELM (SE) ★
- PEACHLEAF WILLOW (PW) ●
- AMERICAN ELM (AE) ✠
- MIGRATORY BIRD NEST ⬣
- PLAINS COTTONWOOD PC
- LIMITS OF DISTURBANCE ——LDA——
- TREE REMOVAL □
- PLASTIC CONSTRUCTION FENCE —PF—

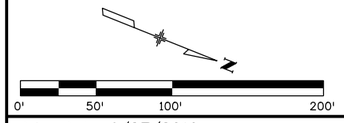

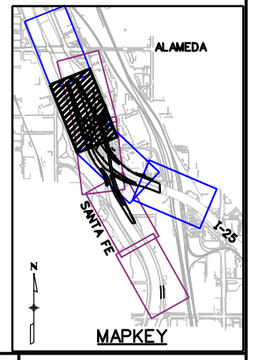

MAPKEY

Print Date: 9/27/2010		Sheet Revisions			
File Name: 16311LAND_ENVI_PH2_Hab Plan6.dgn		Date:	Comments	Init.	
Horiz. Scale: 1:100 Vert. Scale: As Noted					
Unit Information Unit Leader Initials					
FELSBURG HOLT & ULLEVIG 6300 South Syracuse Way Centennial, CO 80111					

Colorado Department of Transportation
DEPARTMENT OF TRANSPORTATION
2000 South Holly Street
Denver, CO 80222
Phone: 303-972-9112 FAX: 303-972-9114
Region 6 RLB

As Constructed
No Revisions:
Revised:
Void:

I-25/SANTA FE INTERCHANGE
SB40 TREES, WETLANDS, MIGRATORY BIRD NEST PLAN

Designer:	KAB	Structure Numbers	
Detailer:	RSA		
Sheet Subset:	MISC	Subset Sheets:	EP-6 of 10

Project No./Code
IM 0254-394
16311
Sheet Number 60

Kate 3:19:07 PM K:\08276\16311\Phase 2\Landscape_Environmental\Drawings\16311LAND_ENV1_PH2_Hab Plan6.dgn
9/27/2010 CDOT-DefaultPrinter_XM.pltcfg CDOT-PenTable.tbl

UTILITY INFORMATION SHOWN IS PLOTTED FROM THE BEST AVAILABLE DATA. THE CONTRACTOR IS RESPONSIBLE FOR MAKING THEIR OWN DETERMINATION AS TO THE TYPE AND LOCATION OF UTILITIES AS MAY BE NECESSARY TO AVOID DAMAGE THERETO. CONTACT THE UTILITY NOTIFICATION CENTER OF COLORADO AT 1-800-922-1987 FOR UTILITY LOCATIONS AT LEAST 72 HOURS PRIOR TO EXCAVATING. CONTRACTOR SHALL COORDINATE WITH UTILITY COMPANY FOR ANY UTILITIES THAT NEED RELOCATING.

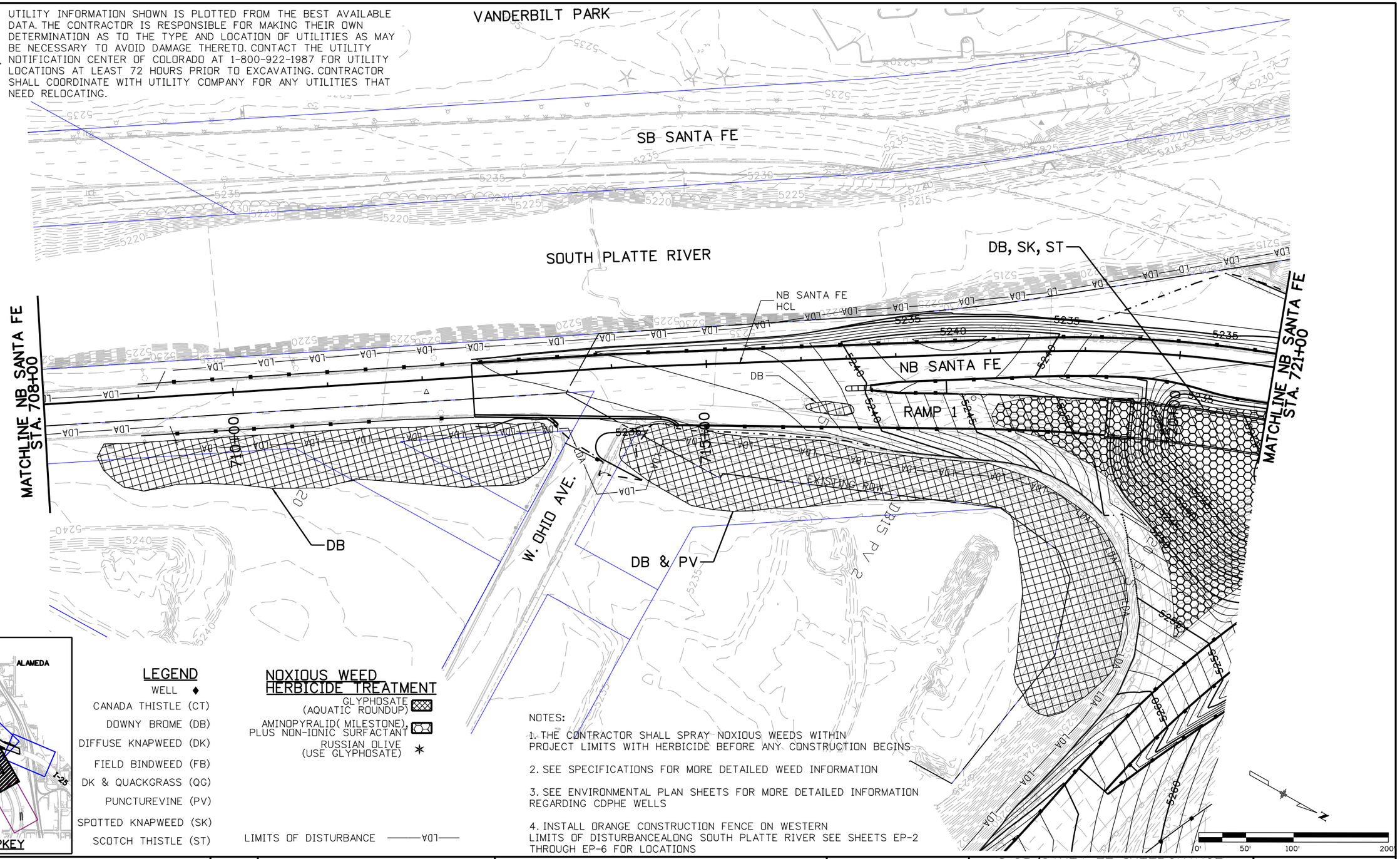

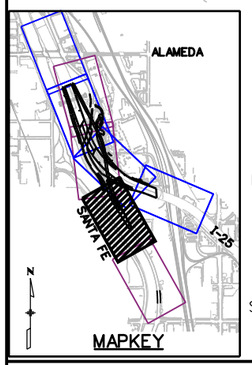

LEGEND

WELL ♦

CANADA THISTLE (CT)

DOWNY BROME (DB)

DIFFUSE KNAPWEED (DK)

FIELD BINDWEED (FB)

DK & QUACKGRASS (QG)

PUNCTUREVINE (PV)

SPOTTED KNAPWEED (SK)

SCOTCH THISTLE (ST)

LIMITS OF DISTURBANCE ———LDA———

NOXIOUS WEED HERBICIDE TREATMENT

GLYPHOSATE (AQUATIC ROUNDUP)

AMINOPYRALID(MILESTONE), PLUS NON-IONIC SURFACTANT

RUSSIAN OLIVE (USE GLYPHOSATE) ✶

NOTES:

1. THE CONTRACTOR SHALL SPRAY NOXIOUS WEEDS WITHIN PROJECT LIMITS WITH HERBICIDE BEFORE ANY CONSTRUCTION BEGINS

2. SEE SPECIFICATIONS FOR MORE DETAILED WEED INFORMATION

3. SEE ENVIRONMENTAL PLAN SHEETS FOR MORE DETAILED INFORMATION REGARDING CDPHE WELLS

4. INSTALL ORANGE CONSTRUCTION FENCE ON WESTERN LIMITS OF DISTURBANCEALONG SOUTH PLATTE RIVER SEE SHEETS EP-2 THROUGH EP-6 FOR LOCATIONS

Print Date: 9/27/2010	Sheet Revisions		
File Name: 16311LAND_ENVI_PH2_Hab Plan7.dgn	Date:	Comments	Init.
Horiz. Scale: 1:100 Vert. Scale: As Noted			
Unit Information Unit Leader Initials			
FELSBURG HOLT & ULLEVIG 6300 South Syracuse Way Centennial, CO 80111			

Colorado Department of Transportation
2000 South Holly Street
Denver, CO 80222
Phone: 303-972-9112 FAX: 303-972-9114
Region 6 RLB

As Constructed
No Revisions:
Revised:
Void:

I-25/SANTA FE INTERCHANGE NOXIOUS WEED AND GROUNDWATER WELL PLAN

Designer:	KAB	Structure Numbers	
Detailer:	RSA		
Sheet Subset:	MISC	Subset Sheets: EP-7 of 10	

Project No./Code
IM 0254-394
16311
Sheet Number 61

Kate 3:36:28 PM K:\08276\16311\Phase 2\Landscape_Environmental\Drawings\16311LAND_ENVI_PH2_Hab Plan7.dgn
9/27/2010 CDOT-DefaultPrinter_XM.pltcfg CDOT-PenTable.tbl

Know what's below. Call before you dig.

UTILITY INFORMATION SHOWN IS PLOTTED FROM THE BEST AVAILABLE DATA. THE CONTRACTOR IS RESPONSIBLE FOR MAKING THEIR OWN DETERMINATION AS TO THE TYPE AND LOCATION OF UTILITIES AS MAY BE NECESSARY TO AVOID DAMAGE THERETO. CONTACT THE UTILITY NOTIFICATION CENTER OF COLORADO AT 1-800-922-1987 FOR UTILITY LOCATIONS AT LEAST 72 HOURS PRIOR TO EXCAVATING. CONTRACTOR SHALL COORDINATE WITH UTILITY COMPANY FOR ANY UTILITIES THAT NEED RELOCATING.

NOTES:

1. THE CONTRACTOR SHALL SPRAY NOXIOUS WEEDS WITHIN PROJECT LIMITS WITH HERBICIDE BEFORE ANY CONSTRUCTION BEGINS

2. SEE SPECIFICATIONS FOR MORE DETAILED WEED INFORMATION

3. SEE ENVIRONMENTAL PLAN SHEETS FOR MORE DETAILED INFORMATION REGARDING CDPHE WELLS

4. INSTALL PLASTIC CONSTRUCTION FENCE ALONG WESTERN LIMITS OF DISTURBANCE ALONG SOUTH PLATTE RIVER. SEE SHEETS EP-2 THROUGH EP-6 FOR LOCATIONS

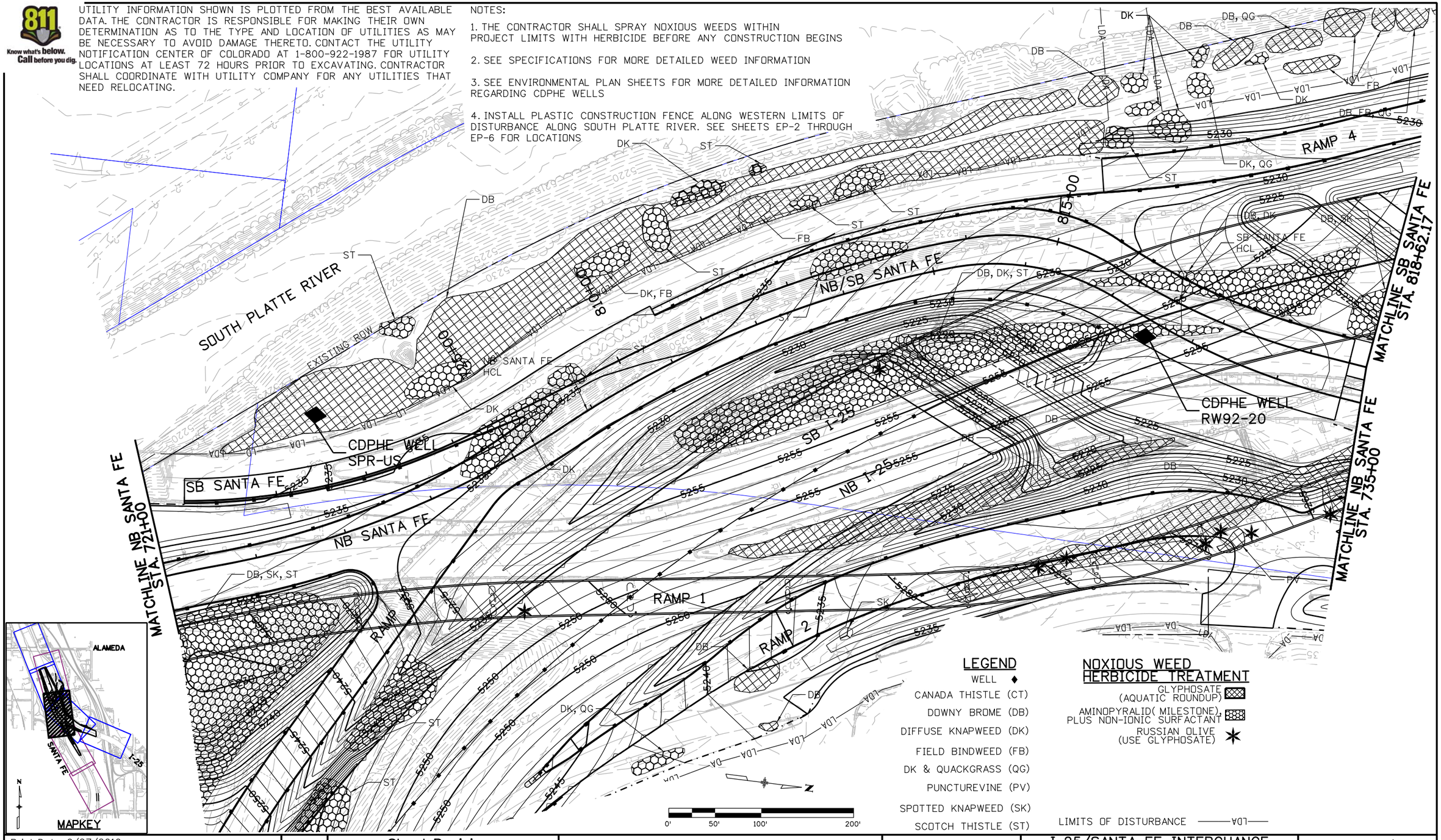

LEGEND

- WELL ♦
- CANADA THISTLE (CT)
- DOWNY BROME (DB)
- DIFFUSE KNAPWEED (DK)
- FIELD BINDWEED (FB)
- DK & QUACKGRASS (QG)
- PUNCTUREVINE (PV)
- SPOTTED KNAPWEED (SK)
- SCOTCH THISTLE (ST)

NOXIOUS WEED HERBICIDE TREATMENT

- GLYPHOSATE (AQUATIC ROUNDUP)
- AMINOPYRALID(MILESTONE), PLUS NON-IONIC SURFACTANT
- RUSSIAN OLIVE (USE GLYPHOSATE)

LIMITS OF DISTURBANCE ——LDA——

Print Date: 9/27/2010	Sheet Revisions		
File Name: 16311LAND_ENVI_PH2_Hab Plan8.dgn	Date:	Comments	Init.
Horiz. Scale: 1:100 Vert. Scale: As Noted			
Unit Information Unit Leader Initials			
FELSBURG HOLT & ULLEVIG 6300 South Syracuse Way Centennial, CO 80111			

0000

Colorado Department of Transportation
DEPARTMENT OF TRANSPORTATION
2000 South Holly Street
Denver, CO 80222
Phone: 303-972-9112 FAX: 303-972-9114
Region 6 RLB

As Constructed
No Revisions:
Revised:
Void:

I-25/SANTA FE INTERCHANGE NOXIOUS WEED AND GROUNDWATER WELL PLAN

Designer:	KAB	Structure Numbers	
Detailer:	RSA		
Sheet Subset:	MISC	Subset Sheets: EP-8 of 10	

Project No./Code: IM 0254-394
16311
Sheet Number 62

Kate 3:48:46 PM K:\08276\16311\Phase 2\Landscape_Environmental\Drawings\16311LAND_ENVI_PH2_Hab Plan8.dgn
9/27/2010 CDOT-DefaultPrinter_XM.pltcfg CDOT-PenTable.tbl

Know what's below. Call before you dig.

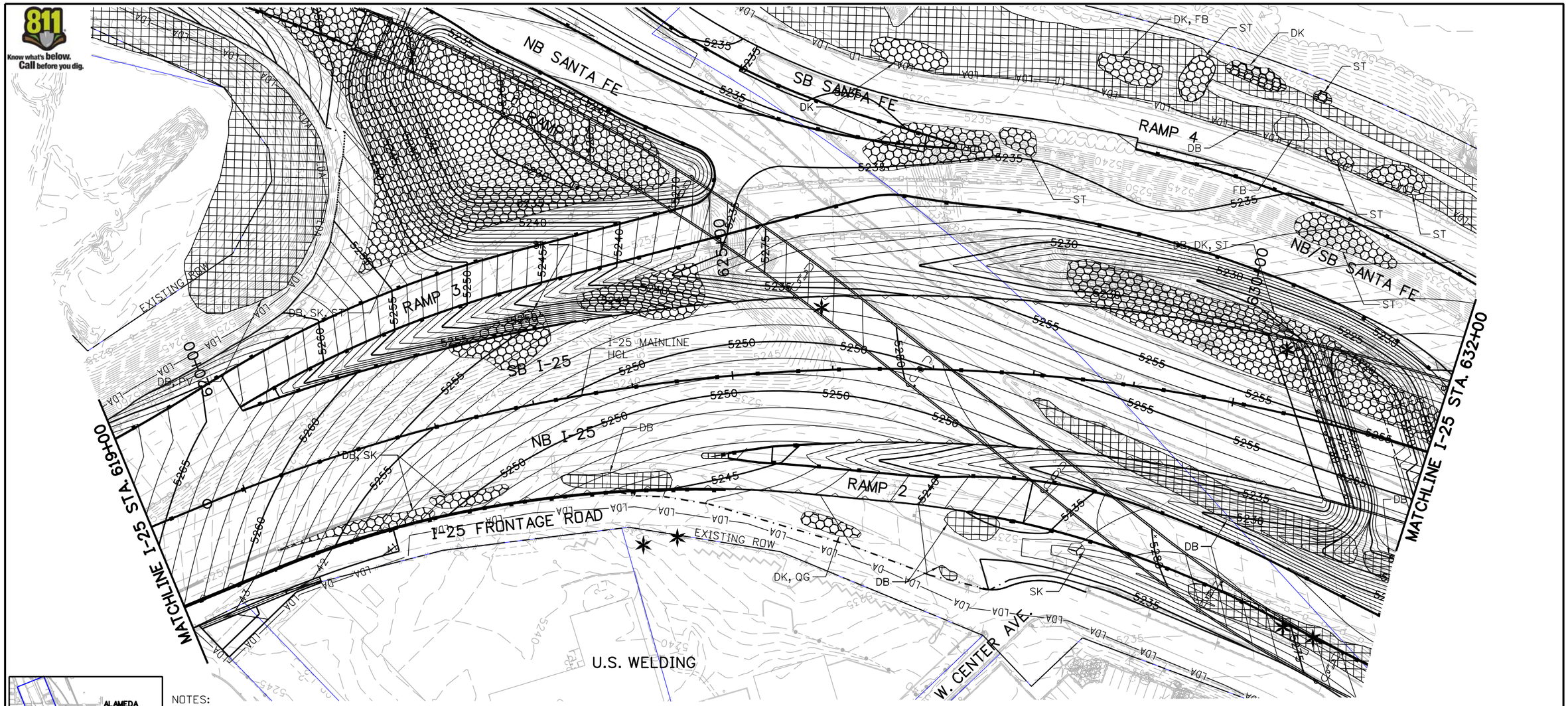

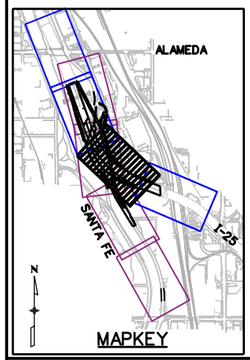

NOTES:

1. THE CONTRACTOR SHALL SPRAY NOXIOUS WEEDS WITHIN PROJECT LIMITS WITH HERBICIDE BEFORE ANY CONSTRUCTION BEGINS
2. SEE SPECIFICATIONS FOR MORE DETAILED WEED INFORMATION
3. SEE ENVIRONMENTAL PLAN SHEETS FOR MORE DETAILED INFORMATION REGARDING CDPHE WELLS
4. INSTALL PLASTIC CONSTRUCTION FENCE ALONG WESTERN LIMITS OF DISTURBANCE ALONG SOUTH PLATTE RIVER. SEE SHEETS EP-2 THROUGH EP-6 FOR LOCATIONS.

LEGEND

WELL ♦

CANADA THISTLE (CT)

DOWNY BROME (DB)

DIFFUSE KNAPWEED (DK)

FIELD BINDWEED (FB)

DK & QUACKGRASS (QG)

PUNCTUREVINE (PV)

SPOTTED KNAPWEED (SK)

SCOTCH THISTLE (ST)

LIMITS OF DISTURBANCE ——LDA——

NOXIOUS WEED HERBICIDE TREATMENT

GLYPHOSATE (AQUATIC ROUNDUP)

AMINOPYRALID(MILESTONE), PLUS NON-IONIC SURFACTANT

RUSSIAN OLIVE (USE GLYPHOSATE) *

N

0' 50' 100' 200'

Print Date: 9/27/2010	Sheet Revisions		
File Name: 16311LAND_ENVI_PH2_Hab Plan9.dgn	Date:	Comments	Init.
Horiz. Scale: 1:100 Vert. Scale: As Noted			
Unit Information Unit Leader Initials			
FELSBURG HOLT & ULLEVIG 6300 South Syracuse Way Centennial, CO 80111			

Colorado Department of Transportation
DEPARTMENT OF TRANSPORTATION
2000 South Holly Street
Denver, CO 80222
Phone: 303-972-9112 FAX: 303-972-9114
Region 6 RLB

As Constructed
No Revisions:
Revised:
Void:

I-25/SANTA FE INTERCHANGE
NOXIOUS WEED AND GROUNDWATER WELL PLAN

Designer: KAB
Detailer: RSA
Sheet Subset: MISC
Structure Numbers
Subset Sheets: EP-9 of 10

Project No./Code
IM 0254-394
16311
Sheet Number 63

Kate 4:03:15 PM 9/27/2010 K:\08276\16311\Phase 2\Landscape_Environmental\Drawings\16311LAND_ENV1_PH2_Hab Plan9.dgn CDOT-DefaultPrinter_XM.pltcfg CDOT-PenTable.tbl

UTILITY INFORMATION SHOWN IS PLOTTED FROM THE BEST AVAILABLE DATA. THE CONTRACTOR IS RESPONSIBLE FOR MAKING THEIR OWN DETERMINATION AS TO THE TYPE AND LOCATION OF UTILITIES AS MAY BE NECESSARY TO AVOID DAMAGE THERETO. CONTACT THE UTILITY NOTIFICATION CENTER OF COLORADO AT 1-800-922-1987 FOR UTILITY LOCATIONS AT LEAST 72 HOURS PRIOR TO EXCAVATING. CONTRACTOR SHALL COORDINATE WITH UTILITY COMPANY FOR ANY UTILITIES THAT NEED RELOCATING.

NOTES:

1. THE CONTRACTOR SHALL SPRAY NOXIOUS WEEDS WITHIN PROJECT LIMITS WITH HERBICIDE BEFORE ANY CONSTRUCTION BEGINS

2. SEE SPECIFICATIONS FOR MORE DETAILED WEED INFORMATION

3. SEE ENVIRONMENTAL PLAN SHEETS FOR MORE DETAILED INFORMATION REGARDING CDPHE WELLS

4. INSTALL PLASTIC FENCING ALONG WESTERN LIMITS OF DISTURBANCE ALONG SOUTH PLATTE RIVER. SEE SHEETS EP-2 THROUGH EP-6 FOR LOCATIONS

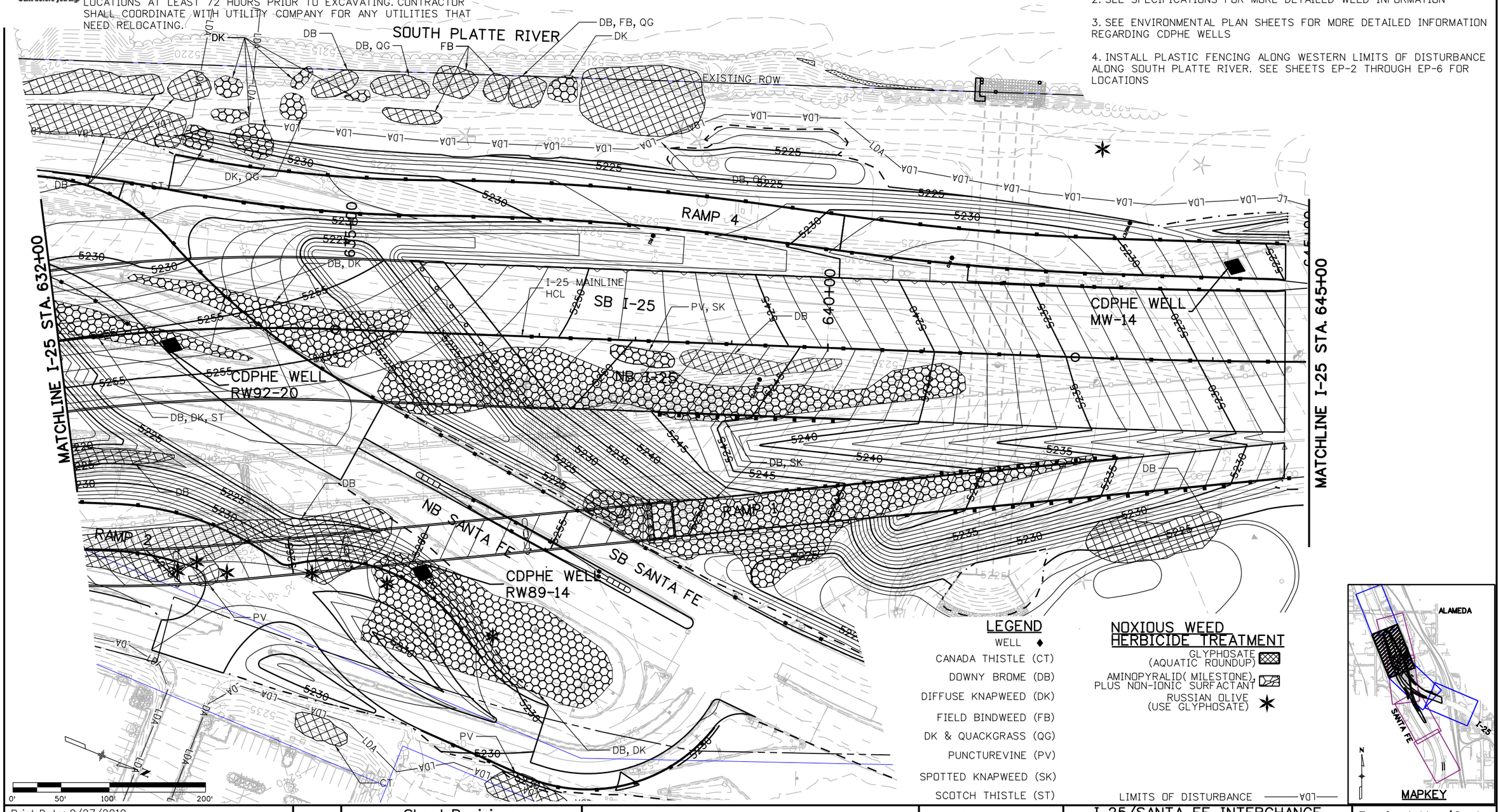

LEGEND

WELL ♦

CANADA THISTLE (CT)

DOWNY BROME (DB)

DIFFUSE KNAPWEED (DK)

FIELD BINDWEED (FB)

DK & QUACKGRASS (QG)

PUNCTUREVINE (PV)

SPOTTED KNAPWEED (SK)

SCOTCH THISTLE (ST)

NOXIOUS WEED HERBICIDE TREATMENT

GLYPHOSATE (AQUATIC ROUNDUP)

AMINOPYRALID(MILESTONE), PLUS NON-IONIC SURFACTANT

RUSSIAN OLIVE (USE GLYPHOSATE) ✶

LIMITS OF DISTURBANCE ——LDA——

Print Date: 9/27/2010

File Name: 16311LAND_ENVI_PH2_Hab Plan10.dgn

Horiz. Scale: 1:100 Vert. Scale: As Noted

Unit Information Unit Leader Initials

FELSBURG HOLT & ULLEVIG 6300 South Syracuse Way Centennial, CO 80111

0000

Sheet Revisions		
Date:	Comments	Init.

Colorado Department of Transportation

DEPARTMENT OF TRANSPORTATION

2000 South Holly Street
Denver, CO 80222
Phone: 303-972-9112 FAX: 303-972-9114

Region 6 RLB

As Constructed

No Revisions:

Revised:

Void:

I-25/SANTA FE INTERCHANGE NOXIOUS WEED AND GROUNDWATER WELL PLAN

Designer: KAB

Detailer: RSA

Sheet Subset: MISC

Structure Numbers

Subset Sheets: EP-10 of 10

Project No./Code

IM 0254-394

16311

Sheet Number 64

Kate 4:12:59 PM K:\08276\16311\Phase 2\Landscape_Environmental\Drawings\16311LAND_ENV1_PH2_Hab Plan10.dgn
9/27/2010 CDOT-DefaultPrinter_XM.pltcfg CDOT-PenTable.tbl

I-25 SB WALL 1B
Str. No. WALL-F-16-DW

I-25 NB WALL 1B
Str. No. WALL-F-16-DW

I-25 SB WALL 1
Str. No. WALL-F-16-DW

I-25 OVER SANTA FE
Str. No. F-16-XS

Santa Fe SB

South Platte River

RAMP 1 WALL 2
Str. No. WALL-F-16-DU

EXISTING ALAMEDA CULVERT
Str. No. F-16-XT

Santa Fe NB

Ramp 1

I-25 NB WALL 2
Str. No. WALL-F-16-DX

I-25 SB WALL 2
Str. No. WALL-F-16-DX

Ramp 4

Ramp 3

SB I-25

NB I-25

Ramp 2

Ramp 1

Temporary Bridge Location (Removed in Final Configuration)

I-25 NB WALL 1
Str. No. WALL-F-16-DW

RAMP 1 WALL 3
Str. No. WALL-F-16-DV

Santa Fe SB

Santa Fe NB

RAMP 1 (Santa Fe to NB I-25)
Str. No. F-16-XR

I-25 SB WALL 2B
Str. No. WALL-F-16-DX

I-25 NB WALL 2B
Str. No. WALL-F-16-DX

RAMP 1 WALL 4
Str. No. WALL-F-16-DV

RAMP 1 WALL 3B
Str. No. WALL-F-16-DV

Existing Wall-F-16-BL to remain

RAMP 2 WALL
Str. No. WALL-F-16-DS

SB I-25

NB I-25

Existing Wall-F-16-BL (to remain behind behind proposed wall)

EXISTING OVERHEAD ELECTRIC, SEE SECTION FOR DETAILS

Revision Dates (Preliminary Stage Only)

Design	INITIAL	DATE
Designed By	PRS	03/10
Checked By		

Detail	INITIAL	DATE
Detailed By	RAD	03/10
Checked By		

Quantities	INITIAL	DATE
Quantities By		
Checked By		

Patrick 12:00:13 PM K:\08276\16311\Phase 2\Bridge\Drawings\16311BRDG_PH2_StructLocMap-Final.dgn
9/27/2010 CDOT_DefaultPrinter_XM.pltcfg CDOT-PenTable.tbl

Print Date: 9/27/2010
File Name: 16311BRDG_PH2_StructLocMap-Final.dgn
Horiz. Scale: 1:200 Vert. Scale: As Noted
Unit Information Unit Leader Initials

FELSBURG HOLT & ULLEVIG 6300 South Syracuse Way Centennial, CO 80111 25 years of engineering paths to transportation solutions

Sheet Revisions		
Date:	Comments	Init.

Colorado Department of Transportation
2000 South Holly Street
Denver, CO 80222
Phone: 303-972-9112 FAX: 303-972-9114
Region 6 RLB

As Constructed
No Revisions:
Revised:
Void:

I-25/SANTA FE INTERCHANGE STRUCTURE LOCATION MAP FINAL CONFIGURATION

Designer: P. STEIN
Detailer: R. DILLON
Sheet Subset: MAP
Structure Numbers: MULTIPLE
Subset Sheets: LM-1 of 1

Project No./Code
IM 0254-394
16311
Sheet Number 65

GENERAL NOTES

STRUCTURE EXCAVATION AND BACKFILL SHALL BE AS SHOWN ON THE PLANS. SEE WALL DRAWINGS FOR EXCAVATION AND BACKFILL AT ABUTMENTS.

THE FINAL FINISH FOR THE SURFACES OF THE TYPE 7 BRIDGE RAIL SHALL BE CLASS 2. ALL OTHER EXPOSED CONCRETE SURFACES SHALL RECEIVE A CLASS 1 OR CLASS 4 (AS SHOWN) FINAL FINISH TO ONE FOOT BELOW THE GROUND LINE.

ALL REINFORCING STEEL SHALL BE ASTM A615 GRADE 60. IF ANY PORTION OF A BAR EXTENDS ABOVE GRADE, THAT BAR SHALL BE EPOXY COATED, WITH THE EXCEPTION OF PRECAST GIRDER STEEL.

UNLESS NOTED OTHERWISE IN THE PLANS, THE FOLLOWING TABLE GIVES THE MINIMUM LAP SPLICE LENGTHS FOR REINFORCING BARS.

	BAR SIZE	#3	#4	#5	#6	#7	#8	#9	#10	#11
NON-EPOXY COATED	CLASS BZ	1'-4"	1'-9"	2'-2"	2'-7"	3'-3"	4'-3"	5'-4"	6'-9"	8'-4"
EPOXY COATED	CLASS D	1'-11"	2'-7"	3'-3"	3'-10"	4'-7"	6'-0"	7'-7"	9'-7"	11'-9"
	CLASS PS	1'-4"	1'-9"	2'-2"	2'-7"	-	-	-	-	-
	CLASS S50	-	-	-	-	-	-	-	-	-

THE ABOVE SPLICE LENGTHS SHALL BE INCREASED BY 20 PERCENT FOR 3 BAR BUNDLES AND 33 PERCENT FOR 4 BAR BUNDLES.

WHEN THE CONTRACTOR ELECTS TO SUBSTITUTE EPOXY COATED REINFORCEMENT FOR BLACK REINFORCEMENT BARS, THE MINIMUM LAP SPLICE SHALL BE AS DESCRIBED ABOVE FOR EPOXY COATED REINFORCING BARS.

THE STOCK LENGTH ASSUMED FOR ALL REINFORCING IS 60 FEET.

FOR REINFORCING DIMENSIONS AND QUANTITIES, SEE BAR LIST SHEETS.

THE CONTRACTOR SHALL BE RESPONSIBLE FOR THE STABILITY OF THE STRUCTURE DURING CONSTRUCTION.

PERMANENT STEEL DECK FORMS ARE NOT ALLOWED EXCEPT BETWEEN THE WEBS OF AN INDIVIDUAL U-GIRDER. FORM FLUTES SHALL BE FILLED WITH STYROFOAM. SUPPORT ANGLES OR ANY OTHER STEEL ELEMENTS LEFT IN PLACE AND EXPOSED TO THE ATMOSPHERE SHALL BE GALVANIZED IN ACCORDANCE WITH SECTION 509.11 OF THE STANDARD SPECIFICATIONS.

PERMANENT CONCRETE DECK FORMS ARE NOT ALLOWED.

FOR STRUCTURE NUMBER INSTALLATION, SEE STANDARD S-614-12.

THE INFORMATION SHOWN ON THESE PLANS CONCERNING THE TYPE AND LOCATION OF UNDERGROUND UTILITIES IS NOT GUARANTEED TO BE ACCURATE OR ALL INCLUSIVE. THE CONTRACTOR IS RESPONSIBLE FOR MAKING HIS OWN DETERMINATION AS TO THE TYPE AND LOCATION OF UNDERGROUND UTILITIES AS MAY BE NECESSARY TO AVOID DAMAGE THERETO. THE CONTRACTOR SHALL CONTACT THE UTILITY NOTIFICATION CENTER OF COLORADO AT 1-800-922-1987 AT LEAST 2 DAYS (NOT INCLUDING THE DAY OF NOTIFICATION) PRIOR TO ANY EXCAVATION OR OTHER EARTHWORK.

SEE FEDERAL AID PROJECT NO.'S _____ AND _____ FOR EXISTING BRIDGES F-16-DT AND F-16-DW.

ALL THE PROVISIONS FOR BRIDGE DECK CONCRETE SHALL ALSO APPLY TO APPROACH SLAB CONCRETE.

DESIGN DATA

AASHTO, LRFD BRIDGE DESIGN SPECIFICATIONS
4TH EDITION WITH INTERIMS THROUGH 2009
DESIGN METHOD: LOAD AND RESISTANCE FACTOR DESIGN

DESIGN IS BASED ON A PRESTRESSING FORCE OF 75% fpu MAX.

LIVE LOAD: HL-93 (DESIGN TRUCK OR TANDEM, AND DESIGN LANE LOAD)
DEAD LOAD: ASSUMES 36 LBS. PER SQ. FT. FOR BRIDGE DECK OVERLAY,
5 LBS. PER SQ. FT. BETWEEN WEBS OF IDIVIDUAL GIRDERS FOR S.I.P. DECK FORMS

REINFORCED CONCRETE		
ELEMENT	CLASS	f'c (PSI)
DECK PIERS ABUTMENTS ABUTMENT DIAPHRAGMS	D	4,500
PIER DIAPHRAGMS CLOSURES	S50	7,250
CAISSONS	BZ	4,000

PRESTRESSED CONCRETE (U-GIRDERS):

CLASS PS CONCRETE f'c = (SEE DETAILS)

fs = 270,000 PSI

SEE PROJECT SPECIAL PROVISIONS FOR ADDITIONAL CONCRETE MIX REQUIREMENTS

CONCRETE COVER (UNLESS SHOWN OTHERWISE IN THE PLANS):

SUPERSTRUCTURE:

TOP OF DECK	2"
BOTTOM OF DECK	1"
ALL OTHER SURFACES	1 ½"

SUBSTRUCTURE:

SURFACES CAST AGAINST FORMS	2"
SURFACES CAST AGAINST EARTH	3"

CONSTRUCTION CLEARANCES

SANTA FE RD.
14'-6" VERTICAL

XCEL OVERHEAD TRASMISSION LINES
29'-0" RADIUS WHEN LIVE - SEE CONSTRUCTION SCHEMATICS

LEGEND

B.F. = BACK FACE
E.F. = EACH FACE
F.F. = FRONT FACE
U.N.O. = UNLESS NOTED OTHERWISE
F.F.B.W. = FRONT FACE OF BACKWALL
B.F.B.W. = BACK FACE OF BACKWALL
N.T.S. = NOT TO SCALE
D.S. = DOWNSTATION
U.S. = UPSTATION
W.S. = WEARING SURFACE
T.C. = Tangent To Curve

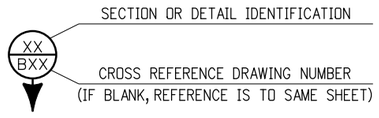

INDEX OF DRAWINGS

B1 GENERAL INFORMATION
B2 SUMMARY OF QUANTITIES
B3 GENERAL LAYOUT
B4 TYPICAL SECTIONS
B5 ENGINEERING GEOLOGY I
B6 ENGINEERING GEOLOGY II
B7 CONSTRUCTION LAYOUT I
B8 CONSTRUCTION LAYOUT II
B9 FOUNDATION LAYOUT
B10 DRILLED CAISSON DETAILS
B11 ABUTMENT 1 DIMENSIONS & REINFORCING I
B12 ABUTMENT 1 DIMENSIONS & REINFORCING II
B13 ABUTMENT 1 DIMENSIONS & REINFORCING III
B14 ABUTMENT 1 DIMENSIONS & REINFORCING IV
B15 ABUTMENT 4 DIMENSIONS & REINFORCING I
B16 ABUTMENT 4 DIMENSIONS & REINFORCING II
B17 ABUTMENT 4 DIMENSIONS & REINFORCING III
B18 ABUTMENT 4 DIMENSIONS & REINFORCING IV
B19 PIER DIMENSIONS & REINFORCING I
B20 PIER DIMENSIONS & REINFORCING II
B21 DECK REINFORCING I
B22 DECK REINFORCING II
B23 DECK REINFORCING III
B24 CLOSURE DIAPHRAGM DIMENSIONS AND REINFORCING
B25 PIER DIAPHRAGM DIMENSIONS & REINFORCING I
B26 PIER DIAPHRAGM DIMENSIONS & REINFORCING II
B27 PRECAST U-GIRDER 1 DETAILS
B28 PRECAST U-GIRDER 2 DETAILS
B29 PRECAST U-GIRDER 3 DETAILS
B30 PRECAST U-GIRDER 4 DETAILS
B31 PRECAST U-GIRDER 5 DETAILS
B32 GIRDER MISCELLANEOUS DETALS
B33 LONGITUDINAL POST-TENSIONING LAYOUT
B34 PT QUANTITIES AND STRESSING SCHEDULE
B35 PT GROUTING AND ANCHORAGE PROTECTION
B36 EXPANSION JOINT DETAILS
B37 BRIDGE RAIL TYPE 7 (SPECIAL)
B38 FENCE CHAIN LINK (SPECIAL) (36 INCH)
B39 APPROACH SLAB DETAILS
B40 MISCELLANEOUS DETAILS I
B41 MISCELLANEOUS DETAILS II
B42 MISCELLANEOUS DETAILS III
B43 BRIDGE EXCAVATION AND BACKFILL
B44 CONDUIT AND LIGHTING DETAILS
B45 CONSTRUCTION SCHEMATIC I
B46 CONSTRUCTION SCHEMATIC II
B47 BRIDGE DECK ELEVATIONS I
B48 BRIDGE DECK ELEVATIONS II
B49 BRIDGE DECK ELEVATIONS III
B50 BRIDGE DECK ELEVATIONS IV
B51 BRIDGE DECK ELEVATIONS V
B52 BRIDGE DECK ELEVATIONS VI
B53 BRIDGE DECK ELEVATIONS VII
B54 BRIDGE DECK ELEVATIONS VIII
B55 BRIDGE DECK ELEVATIONS IX
B56 BRIDGE DECK ELEVATIONS X

BRIDGE DESCRIPTION

I-25 - 3 Span (152'-9¾", 240'-2 ¼", 153'-10"), Bridge,
Precast Concrete Tub Girders, Cast-in-Place Deck.
I-25 over Santa Fe.
71'-0" Rail-to-Rail SB and NB, Skew Varies 32° 06'25" to 40° 26'20"
Bridge Rail Type 7 (Special) with Chain Link Fence.

Revision Dates (Preliminary Stage Only)

Revision	MM/YY

Design	INITIAL	DATE	Detail	INITIAL	DATE	Quantities	INITIAL	DATE
Designed By	XXX	MM/YY	Detailed By	XXX	MM/YY	Quantities By	XXX	MM/YY
Checked By	XXX	MM/YY	Checked By	XXX	MM/YY	Checked By	XXX	MM/YY

Print Date: 9/27/2010		Sheet Revisions	
File Name: 16311FBE_PH2_01_Gen_Information.dgn		Date:	Comments / Init.
Horiz. Scale:	Vert. Scale: As Noted		
Unit Information	Unit Leader Initials		
FIGG 1873 S. Bellaire St., STE 1500 Denver CO, 80222			

Colorado Department of Transportation
2000 South Holly Street
Denver, CO 80222
Phone: 303-972-9112 FAX: 303-972-9114
Region 6 RLB

As Constructed
No Revisions:
Revised:
Void:

I-25/SANTA FE INTERCHANGE
I-25 OVER SANTA FE
GENERAL INFORMATION

Designer: M. Keller
Detailer: S. Fall
Sheet Subset: Bridge
Structure Numbers: F-16-XS
Subset Sheets: B1 of 55

Project No./Code: IM 0254-394
16311
Sheet Number 66

sfall 2:54:53 PM G:\Projects\I-25_Santa_Fe\16311\Bridge\Drawings\16311FBE_PH2_01_Gen_Information.dgn
9/27/2010 CDOT-PDFHighQuality_XM.pltcfg CDOT-PenTable.tbl

SUMMARY OF QUANTITIES

ITEM NO.	DESCRIPTION	UNIT	I-25 OVER SANTA FE BRIDGE						
			SUPER-STRUCTURE	ABUT. 1	PIER 2	PIER 3	ABUT. 4	APPROACH SLABS	TOTAL
202	REMOVAL OF BRIDGE	EACH	-	-	-	-	-	-	2
206	STRUCTURE EXCAVATION	CY	-	-	57	57	-	-	115
206	STRUCTURE BACKFILL (CLASS 1)	CY	-	-	53	53	-	-	106
403	STONE MATRIX ASPHALT	TON	1416	-	-	-	-	129	1545
503	DRILLED CAISSON (42 INCH)	LF	-	450	-	-	424	-	875
503	DRILLED CAISSON (48 INCH)	LF	-	-	529	529	-	-	1058
515	WATERPROOFING (MEMBRANE)	SY	2997	-	-	-	-	273	3270
518	BRIDGE EXPANSION DEVICE (0-4 INCH)	LF	-	-	-	-	-	353	353
601	CONCRETE CLASS D (BRIDGE)	CY	2249	506	86	86	538	182	3646
601	CONCRETE CLASS S50	CY	202	-	-	-	-	-	202
601	STRUCTURAL CONCRETE COATING	SY	12125	264	238	239	280	116	13263
602	REINFORCING STEEL (EPOXY COATED)	LB	907640	139033	30955	30955	147891	45464	1301939
606	BRIDGE RAIL TYPE 7 (SPECIAL)	LF	2187	-	-	-	-	199	2386
607	FENCE CHAIN LINK (SPECIAL) (36 INCH)	LF	1093	-	-	-	-	100	1193
618	PRESTRESSING STEEL STRAND	MKFT	20810	-	-	-	-	-	20810
618	PRECAST CONCRETE U GIRDER (PRECAST AND POST-TENSIONED)	LF	4244	-	-	-	-	-	4244

NOTES:

1. Superstructure Concrete and Reinforcing Includes the Quantities for the Deck, Girder Build-up and Diaphragms.
2. Pier Concrete and Reinforcing Includes the Quantities for the Pier Columns and Pier Drilled Caissons.
3. Abutment Concrete and Reinforcing Includes the Quantities for the Abutments, Abutment Footings and Abutment Drilled Caissons.
4. For Information Only, the Total Weight of Prestressing Steel Wire or Strand is _____ LB (_____ LB for Pier Cap Tendons and _____ LB Longitudinal Girder Tendons).
5. Conduit Quantities Account for Conduit Above the Pull Box at the Base of Column. Conduit in the Ground from Power Source is not Included.
6. See Special Provisions for Material Handling of Excavated Material.

(Preliminary Stage Only)

Revision Dates	MM/YY

Design	INITIAL	DATE
Designed By	XXX	MM/YY
Checked By	XXX	MM/YY

Detail	INITIAL	DATE
Detailed By	XXX	MM/YY
Checked By	XXX	MM/YY

Quantities	INITIAL	DATE
Quantities By	XXX	MM/YY
Checked By	XXX	MM/YY

sfall 4:49:59 PM G:\Projects\I-25_Santa_Fe\16311\Bridge\Drawings\16311FBE_PH2_02_Sum-of Bridge_Quant.dgn
9/27/2010 CDOT-PDFHighQuality_XM.pltcfg CDOT-PenTable.tbl

Print Date: 9/27/2010
File Name: 16311FBE_PH2_02_Sum-of Bridge_Quant.dgn
Horiz. Scale: 1:1 Vert. Scale: As Noted
Unit Information Unit Leader Initials

FIGG
1873 S. BELLAIRE ST., STE 1500
DENVER CO, 80222

Sheet Revisions

Date:	Comments	Init.

Colorado Department of Transportation
DEPARTMENT OF TRANSPORTATION
2000 South Holly Street
Denver, CO 80222
Phone: 303-972-9112 FAX: 303-972-9114
Region 6 RLB

As Constructed
No Revisions:
Revised:
Void:

I-25/SANTA FE INTERCHANGE
SUMMARY OF
BRIDGE QUANTITIES

Designer: M. Keller
Detailer: S. Fall
Sheet Subset: Bridge
Structure Numbers: F-16-XS
Subset Sheets: B2 of 55

Project No./Code
IM 0254-394
16311
Sheet Number 67

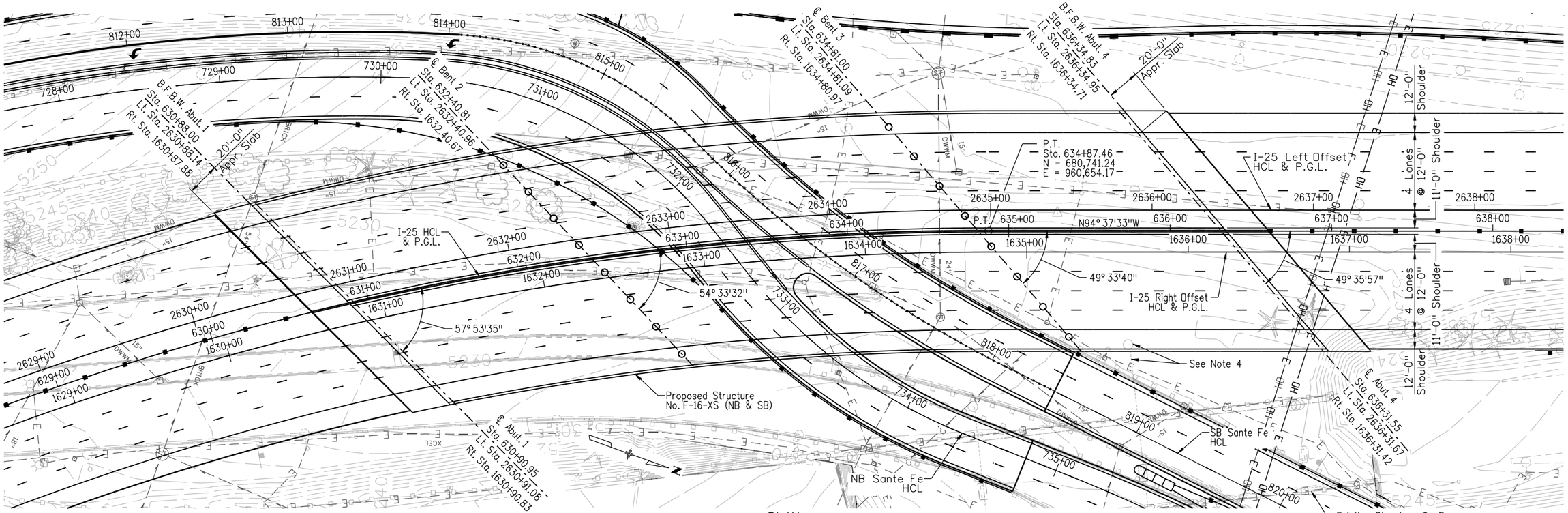

PLAN

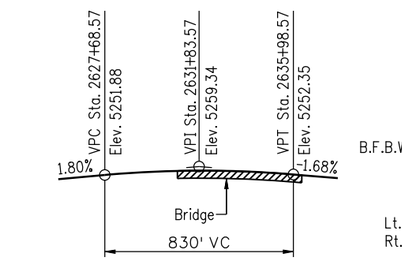

I-25 LEFT OFFSET PROFILE GRADE

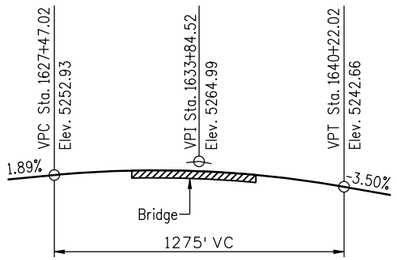

I-25 RIGHT OFFSET PROFILE GRADE

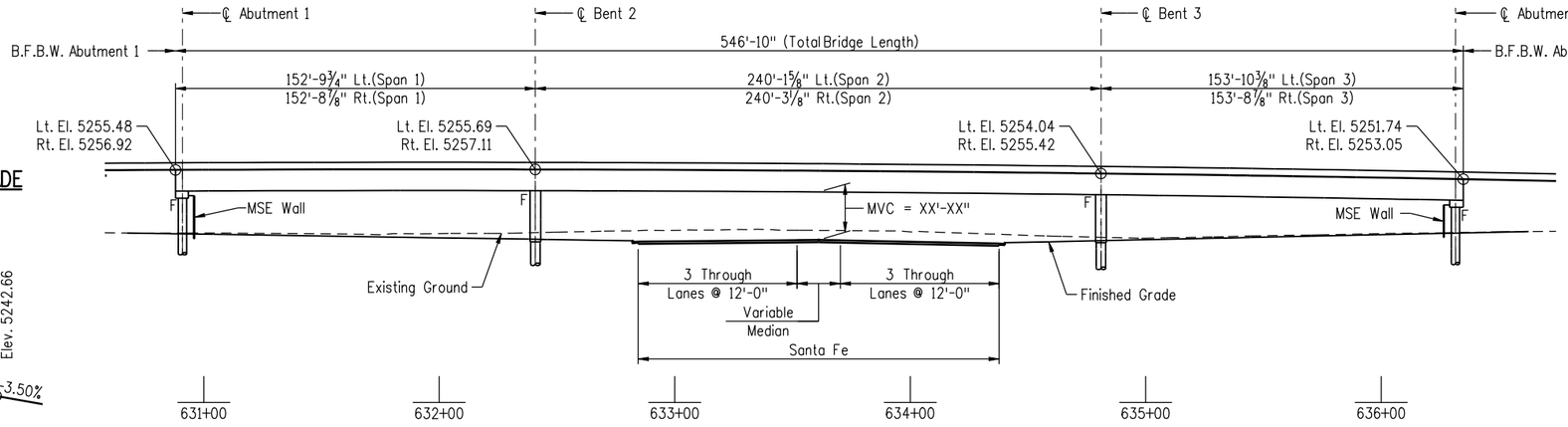

ELEVATION

HORIZONTAL CURVE DATA

Left Offset	Right Offset
P.C. = 2619+60.15	P.C. = 1619+60.15
P.T. = 2634+98.65	P.T. = 1634+76.28
R = 1788.00	R = 1762.00
Δ = 49°18'2"	Δ = 49°18'2"

NOTES:
1. Span Lengths are given along I-25 Horizontal Control Line.
2. Elevations are given at I-25 P.G.L.
3. NB = North Bound
   SB = South Bound
   P.G.L. = Profile Grade Line
   H.C.L. = Horizontal Control Line
   M.V.C. = Minimum Vertical Clearance
4. Existing Straddle Bent and Column, See Project Special Provisions.

(Preliminary Stage Only)

Revision Dates | MM/YY

Design	INITIAL	DATE
Designed By	XXX	MM/YY
Checked By	XXX	MM/YY

Detail	INITIAL	DATE
Detailed By	XXX	MM/YY
Checked By	XXX	MM/YY

Quantities	INITIAL	DATE
Quantities By	XXX	MM/YY
Checked By	XXX	MM/YY

CDOT-PDFHighQuality_XM.pltcfg CDOT-PenTable.tbl

sfail 2:59:50 PM G:\Projects\I-25_Santa_Fe\16311\Bridge\Drawings\16311FBE_PH2_03_Gen_Layout_PG.dgn
9/27/2010

Print Date: 9/27/2010
File Name: 16311FBE_PH2_03_Gen_Layout_PG.dgn
Horiz. Scale: Vert. Scale: As Noted
Unit Information Unit Leader Initials

FIGG
1873 S. Bellaire St., Ste 1500
Denver CO, 80222

Sheet Revisions

Date:	Comments	Init.

Colorado Department of Transportation
2000 South Holly Street
Denver, CO 80222
Phone: 303-972-9112 FAX: 303-972-9114
Region 6 RLB

As Constructed
No Revisions:
Revised:
Void:

I-25/SANTA FE INTERCHANGE
I-25 OVER SANTA FE
GENERAL LAYOUT

Designer: K. Mongomery
Detailer: S.Fall
Sheet Subset: Bridge
Structure Numbers: F-16-XS
Subset Sheets: B4 of 55

Project No./Code
IM 0254-394
16311
Sheet Number 68

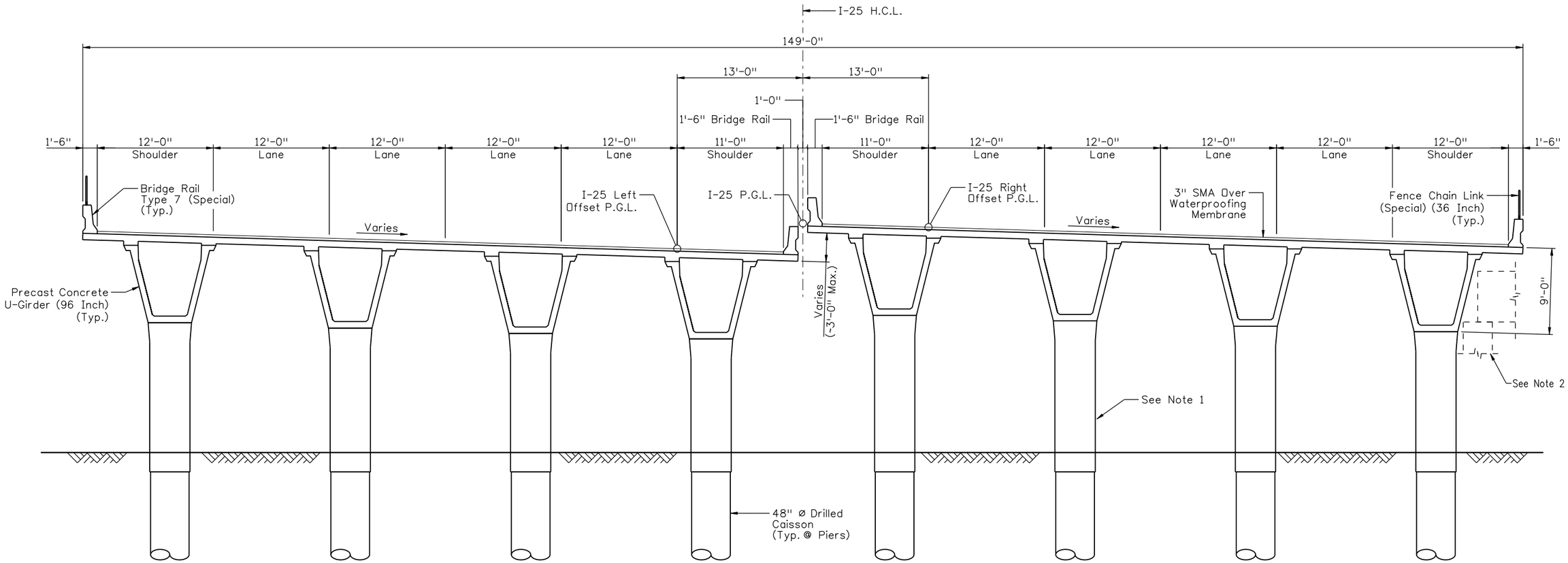

TYPICAL I-25 SECTION
(Looking Ahead Station)

NOTES:
1. All Piers to receive Class 1 Finish to 1'-0" Below Grade.
2. Existing Straddle Bent and Column, See Project Special Provisions.

Design	INITIAL	DATE
Designed By	XXX	MM/YY
Checked By	XXX	MM/YY

Detail	INITIAL	DATE
Detailed By	XXX	MM/YY
Checked By	XXX	MM/YY

Quantities	INITIAL	DATE
Quantities By	XXX	MM/YY
Checked By	XXX	MM/YY

Revision Dates (Preliminary Stage Only)	MM/YY

Print Date: 9/27/2010
File Name: 16311FBE_PH2_04_Typ._Cross_Sec.dgn
Horiz. Scale: 1:1 Vert. Scale: As Noted
Unit Information Unit Leader Initials

FIGG
1873 S. BELLAIRE ST., STE 1500
DENVER CO, 80222

Sheet Revisions

Date:	Comments	Init.

Colorado Department of Transportation
DEPARTMENT OF TRANSPORTATION
2000 South Holly Street
Denver, CO 80222
Phone: 303-972-9112 FAX: 303-972-9114
Region 6 RLB

As Constructed
No Revisions:
Revised:
Void:

I-25/SANTA FE INTERCHANGE
I-25 OVER SANTA FE
TYPICAL SECTIONS

Designer: K. Montgomery
Detailer: S. Fall
Sheet Subset: Bridge
Structure Numbers: F-16-XS
Subset Sheets: B5 of 55

Project No./Code
IM 0254-394
16311
Sheet Number 69

sfall 3:03:25 PM G:\Projects\I-25_Santa_Fe\16311\Bridge\Drawings\16311FBE_PH2_04_Typ._Cross_Sec.dgn
9/27/2010 CDOT-PDFHighQuality_XM.pltcfg CDOT-PenTable.tbl

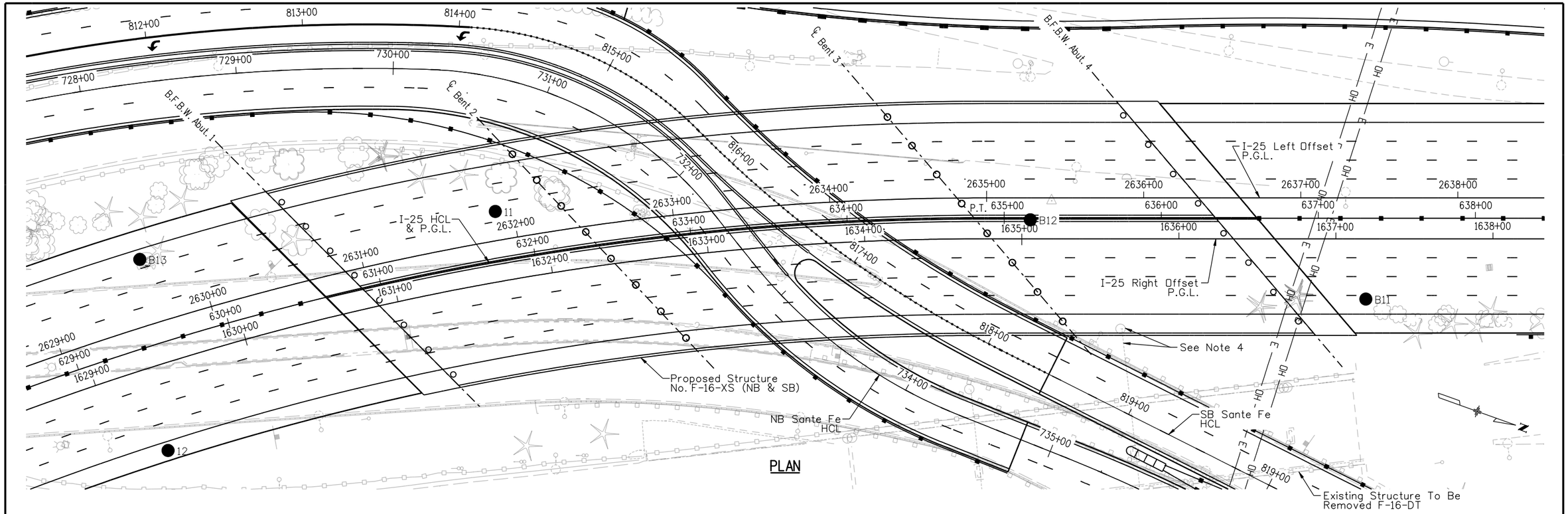

PLAN

LEGEND:

- Topsoil
- Sand and Clay
- Sand and Silt
- Sand and Gravel
- Sandstone and Siltstone/Claystone Bedrock
- Siltstone/Claystone Bedrock
- Drive sample, 2-inch I.D. California liner sample
- Drive sample, 1-3/8 inch I.D. standard sample
- 90% Core sample, 1.5-inch I.D. sample, indicates core run number and Rock Quality Designation (RQD) percentage.
- 23/12 Drive sample blow count, indicates 23 blows of a 140-pound hammer falling 30 inches were required to drive the sampler 12 inches.
- 20/25/30 Drive sample blow count, indicates 20, 25, and 30 blows of a 140-pound hammer falling 30 inches were required to drive the sampler 18 inches.
- 0 Depth to water level and number of days after drilling that measurement was taken.

SEE BORING LOGS INFORMATION SHEETS FOR DETAILED DESCRIPTIONS AND LABORATORY TEST RESULTS.

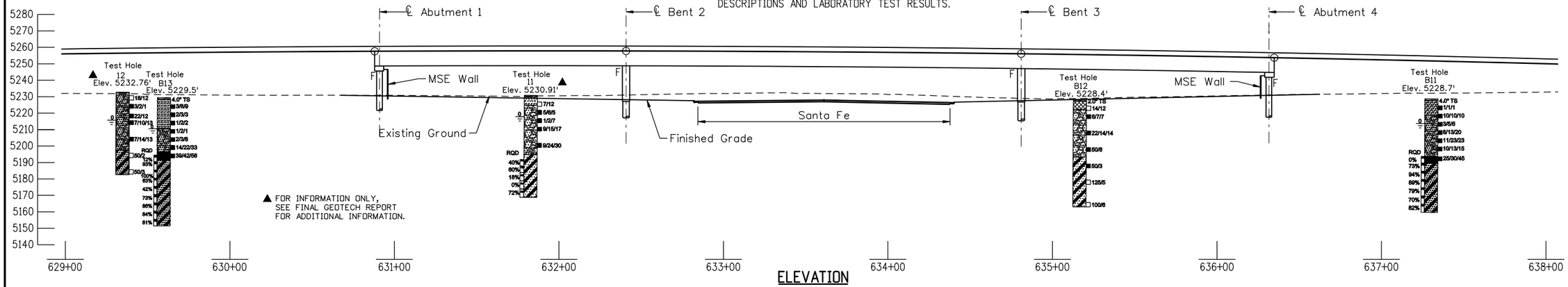

ELEVATION

Design			Detail			Quantities		
	INITIAL	DATE		INITIAL	DATE		INITIAL	DATE
Designed By	XXX	MM/YY	Detailed By	XXX	MM/YY	Quantities By	XXX	MM/YY
Checked By	XXX	MM/YY	Checked By	XXX	MM/YY	Checked By	XXX	MM/YY

Revision Dates (Preliminary Stage Only) MM/YY

sfall 3:23:06 PM G:\Projects\I-25_Santa_Fe\16311\Bridge\Drawings\16311GE_PH2_05_ENG GEO SHEET.dgn
9/27/2010 CDOT-PDFHighQuality_XM.pltcfg CDOT-PenTable.tbl

Print Date: 9/27/2010
File Name: 16311GE_PH2_05_ENG GEO SHEET.dgn
Horiz. Scale: 1:1 Vert. Scale: As Noted
Unit Information Unit Leader Initials

GROUND ENGINEERING CONSULTANTS
41 Inverness Drive East
Englewood, Colorado 80112-5412
303-289-1989 www.groundeng.com

Sheet Revisions		
Date:	Comments	Init.

Colorado Department of Transportation
DOT DEPARTMENT OF TRANSPORTATION
2000 South Holly Street
Denver, CO 80222
Phone: 303-972-9112 FAX: 303-972-9114
Region 6 RLB

As Constructed
No Revisions:
Revised:
Void:

I-25/SANTA FE INTERCHANGE
I-25 OVER SANTA FE
ENGINEERING GEOLOGY

Designer:	H.H.CHAING	Structure Numbers	F-16-XS
Detailer:	H.H.CHAING		
Sheet Subset:	Bridge	Subset Sheets:	B5 of 56

Project No./Code
IM 0254-394
16311
Sheet Number 70

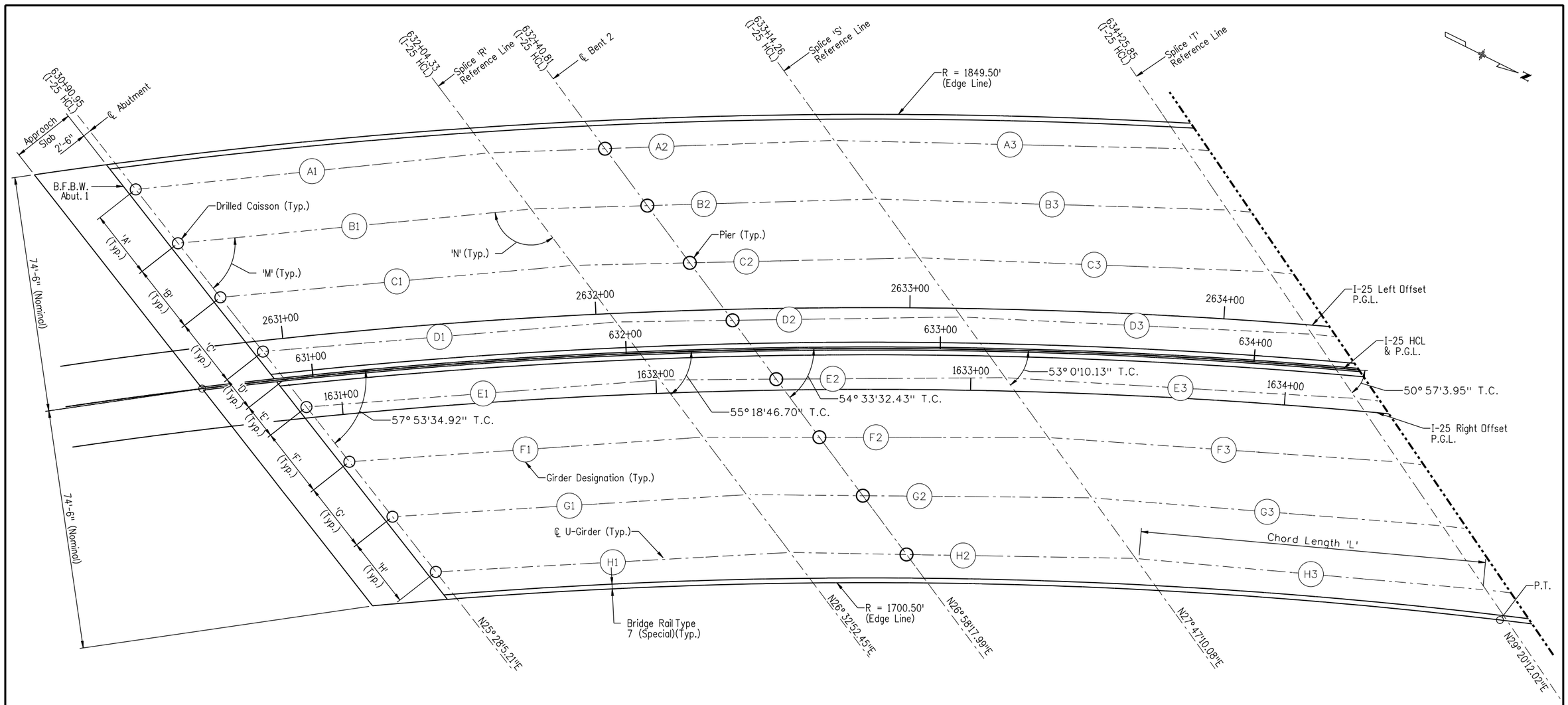

BENT VARIABLE DIMENSIONS

Bent	'A'	'B'	'C'	'D'	'E'	'F'	'G'	'H'
Abutment 1	21.780'	21.862'	21.947'	11.203'	11.227'	22.132'	22.229'	22.331'
Splice 'R'	22.368'	22.469'	22.575'	12.456'	10.647'	22.793'	22.927'	23.055'
Splice 'S'	22.969'	23.092'	23.221'	12.819'	10.966'	23.490'	23.650'	23.808'
Splice 'T'	23.563'	23.790'	24.040	13.016'	11.725'	24.473'	24.566'	24.663'

GIRDER VARIABLE DIMS.

Girder	Downstation ℄ 'M'	Upstation ℄ 'N'	Chord 'L'	Girder	Downstation ℄ 'M'	Upstation ℄ 'N'	Chord 'L'	Girder	Downstation ℄ 'M'	Upstation ℄ 'N'	Chord 'L'
(A1)	57.778	121.142	112.951	(A2)	55.015	123.747	110.058	(A3)	52.842	125.607	111.977
(B1)	57.414	121.507	112.908	(B2)	54.612	124.150	109.996	(B3)	52.406	126.043	111.826
(C1)	57.040	121.880	112.879	(C2)	54.199	124.563	109.950	(C3)	51.925	126.525	111.740
(D1)	56.656	122.264	112.864	(D2)	53.775	124.986	109.920	(D3)	51.392	127.058	111.732
(E1)	56.251	122.669	112.871	(E2)	53.333	125.429	109.908	(E3)	50.799	127.651	111.806
(F1)	55.853	123.068	112.882	(F2)	52.886	125.876	109.917	(F3)	50.198	128.252	111.915
(G1)	55.438	123.482	112.916	(G2)	52.427	126.335	109.946	(G3)	49.624	128.826	111.990
(H1)	55.013	123.907	112.970	(H2)	51.995	126.807	109.998	(H3)	49.073	129.377	112.035

NOTES:
1. For I-25 Horizontal Control Data, See General Layout Sheet.
2. For Sign Support Details, See Sign Support Details Sheet.

Design	INITIAL	DATE	Detail	INITIAL	DATE	Quantities	INITIAL	DATE
Designed By	XXX	MM/YY	Detailed By	XXX	MM/YY	Quantities By	XXX	MM/YY
Checked By	XXX	MM/YY	Checked By	XXX	MM/YY	Checked By	XXX	MM/YY

Revision Dates (Preliminary Stage Only) MM/YY

Print Date: 9/27/2010
File Name: 16311FBE_PH2_06_Constr_LayoutI.dgn
Horiz. Scale: 1:1 Vert. Scale: As Noted
Unit Information Unit Leader Initials

FIGG
1873 S. Bellaire St., Ste 1500
Denver CO, 80222

Sheet Revisions

Date:	Comments	Init.

Colorado Department of Transportation
2000 South Holly Street
Denver, CO 80222
Phone: 303-972-9112 FAX: 303-972-9114
Region 6 RLB

As Constructed
No Revisions:
Revised:
Void:

I-25/SANTA FE INTERCHANGE
I-25 OVER SANTA FE
CONSTRUCTION LAYOUT I

Designer: M. Keller
Detailer: S. Fall
Sheet Subset: Bridge
Structure Numbers: F-16-XS
Subset Sheets: B8 of 55

Project No./Code
IM 0254-394
16311
Sheet Number 71

sfall 3:25:47 PM G:\Projects\I-25_Santa_Fe\16311\Bridge\Drawings\16311FBE_PH2_06_Constr_LayoutI.dgn
9/27/2010 CDOT-PDFHighQuality_XM.pltcfg CDOT-PenTable.tbl

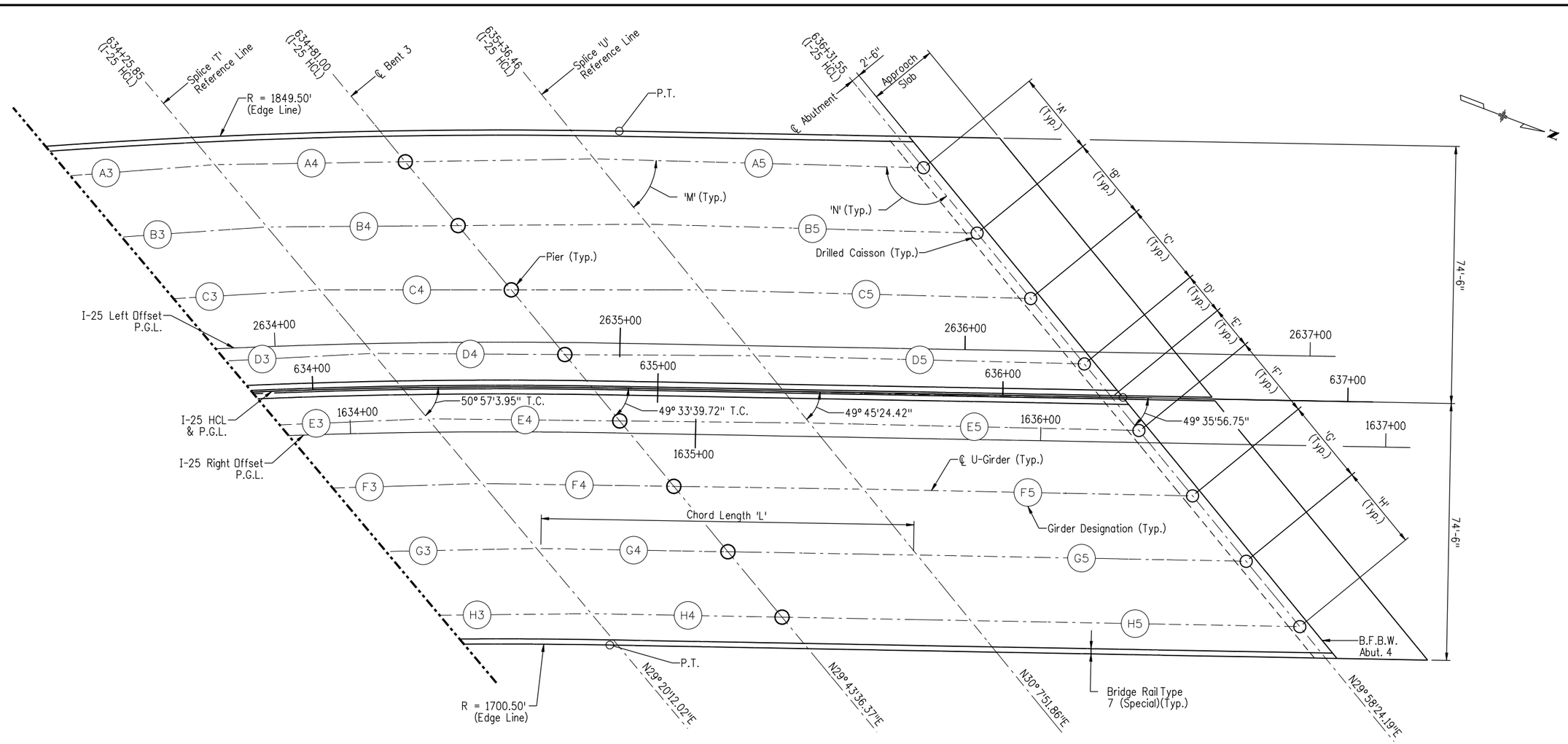

BENT VARIABLE DIMENSIONS

Bent	'A'	'B'	'C'	'D'	'E'	'F'	'G'	'H'
Splice 'T'	23.563'	23.790'	24.040'	13.016'	11.725'	24.473'	24.566'	24.663'
Splice 'U'	24.434'	24.536'	24.633'	13.265'	11.910'	24.724'	24.633'	24.538'
Abutment 4	24.512'	24.512'	24.512'	12.475'	12.475'	24.512'	24.512'	24.512'

GIRDER VARIABLE DIMS.

Girder	Downstation ℄ 'M'	Upstation ℄ 'N'	Chord 'L'	Girder	Downstation ℄ 'M'	Upstation ℄ 'N'	Chord 'L'
(A4)	50.895	128.311	109.956	(A5)	49.272	130.885	95.463
(B4)	50.433	128.772	110.245	(B5)	49.263	130.894	95.565
(C4)	50.023	129.182	110.460	(C5)	49.301	130.857	95.601
(D4)	49.675	129.530	110.579	(D5)	49.382	130.776	95.573
(E4)	49.388	129.818	110.594	(E5)	49.512	130.646	95.479
(F4)	49.175	130.031	110.495	(F5)	49.634	130.523	95.393
(G4)	49.033	130.172	110.280	(G5)	49.716	130.442	95.366
(H4)	48.967	130.239	109.940	(H5)	49.754	130.403	95.401

NOTES:
1. For I-25 Horizontal Control Data, See General Layout Sheet.
2. For Sign Support Details, See Sign Support Details Sheet.

Design	INITIAL	DATE
Designed By	XXX	MM/YY
Checked By	XXX	MM/YY

Detail	INITIAL	DATE
Detailed By	XXX	MM/YY
Checked By	XXX	MM/YY

Quantities	INITIAL	DATE
Quantities By	XXX	MM/YY
Checked By	XXX	MM/YY

Revision Dates (Preliminary Stage Only)	
MM/YY	

Print Date: 9/27/2010
File Name: 16311FBE_PH2_07_Constr_LayoutII.dgn
Horiz. Scale: 1:1 Vert. Scale: As Noted
Unit Information Unit Leader Initials

FIGG
1873 S. Bellaire St., Ste 1500
Denver CO, 80222

Sheet Revisions		
Date:	Comments	Init.

Colorado Department of Transportation
2000 South Holly Street
Denver, CO 80222
Phone: 303-972-9112 FAX: 303-972-9114
Region 6 RLB

As Constructed
No Revisions:
Revised:
Void:

I-25/SANTA FE INTERCHANGE
I-25 OVER SANTA FE
CONSTRUCTION LAYOUT II

Designer:	M. Keller	Structure Numbers	F-16-XS
Detailer:	S. Fall		
Sheet Subset:	Bridge	Subset Sheets:	B9 of 55

Project No./Code
IM 0254-394
16311
Sheet Number 72

sfall 3:27:28 PM G:\Projects\I-25_Santa_Fe\16311\Bridge\Drawings\16311FBE_PH2_07_Constr_LayoutII.dgn
9/27/2010 CDOT-PDFHighQuality_XM.pltcfg CDOT-PenTable.tbl

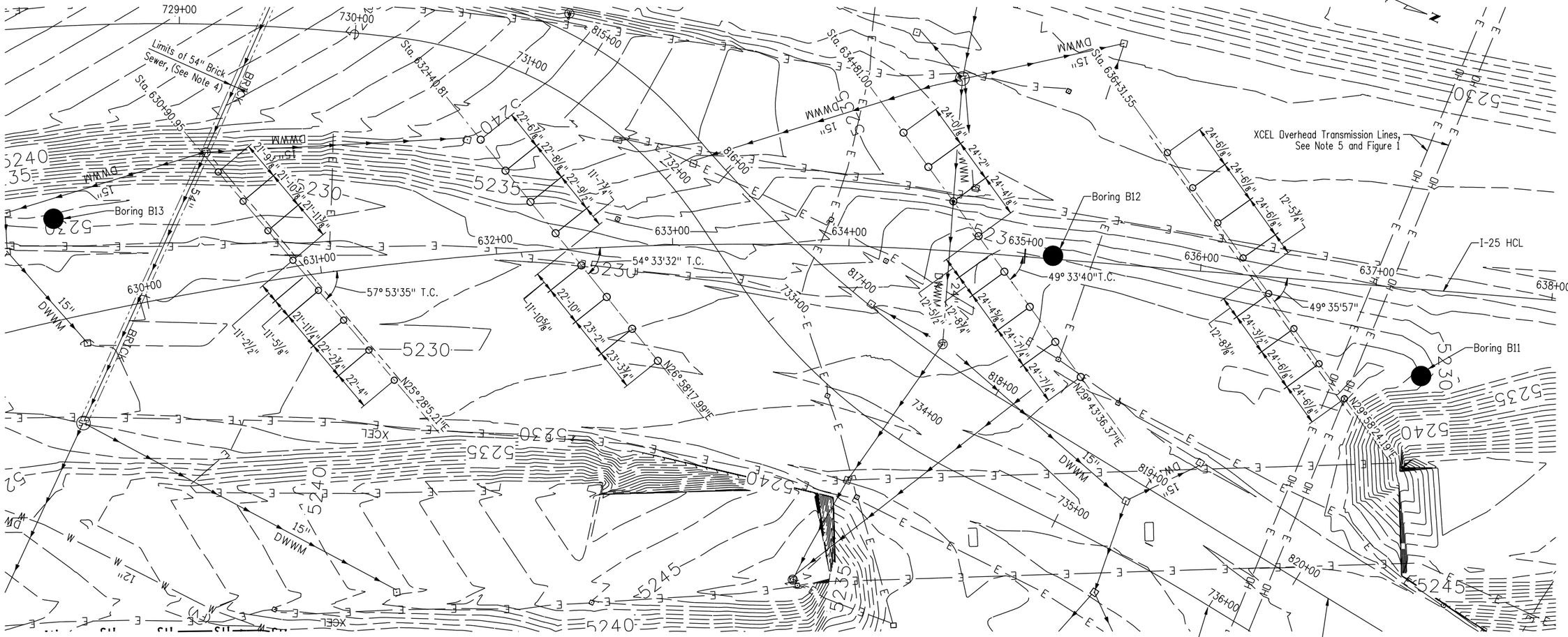

PLAN

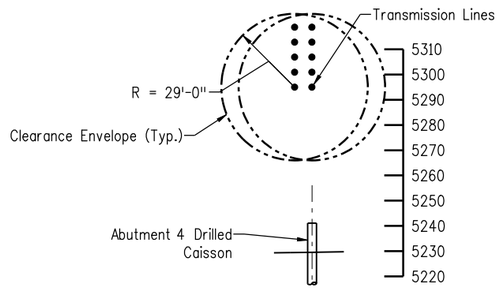

FIGURE 1
(XCEL Line Clearance Envelope)

Know what's below. Call before you dig.

NOTE:
UTILITY LOCATION SHOWN ON THE PLANS ARE FROM THE BEST AVAILABLE INFORMATION. THE CONTRACTOR'S ATTENION IS DIRECTED TO SUBSECTION 105.10 OF THE STANDARD SPECIFICATIONS. THE CONTRACTOR SHALL CALL UTILITY NOTIFICATION CENTER OF COLORADO 811 FOR LOCATION OF MEMBER UTITITIES AT LEAST TWO BUSINESS DAY PRIOR TO ANY EXCAVATION OR OTHER EARTH WORK (NOT INCLUDING THE ACTUAL DAY OF NOTIFICATION). NOTIFICATION OF BOTH MEMBER AND NON-MEMBER UTILITIES IS THE CONTRACTOR'S RESPONSIBILITY.

NOTES:
1. For Abutment Details, See Abutment Dimension and Reinforcing Sheets.
2. For Drilled Caisson Details, See Drilled Caisson Details Sheet.
3. See Utility Plans for Additional Information, and Utility Relocations and Removals.
4. Portion of 54" Brick Sewer Near Abutment 1 Will be Relocated Under Separate Contract, Prior to Letting This Contract.
5. If the Clearance Envelope of the EXCEL Overhead Transmission Lines is to be Penetrated During Construction, Contractor Shall Coordinate Temporary Outage(s) With EXCEL. See Utility Specification For Contact Information and Requirements For Working Near Power Lines

Design	INITIAL	DATE	Detail	INITIAL	DATE	Quantities	INITIAL	DATE
Designed By	XXX	MM/YY	Detailed By	XXX	MM/YY	Quantities By	XXX	MM/YY
Checked By	XXX	MM/YY	Checked By	XXX	MM/YY	Checked By	XXX	MM/YY

Revision Dates (Preliminary Stage Only)
MM/YY

sfall 3:31:06 PM G:\Projects\I-25_Santa_Fe\16311\Bridge\Drawings\16311FBE_PH2_08_Foundation_Layout.dgn
9/27/2010 CDOT-PDFHighQuality_XM.pltcfg CDOT-PenTable.tbl

Print Date: 9/27/2010
File Name: 16311FBE_PH2_08_Foundation_Layout.dgn
Horiz. Scale: 1:1 Vert. Scale: As Noted
Unit Information Unit Leader Initials

FIGG
1873 S. BELLAIRE ST., STE 1500
DENVER CO, 80222

Sheet Revisions		
Date:	Comments	Init.

Colorado Department of Transportation
2000 South Holly Street
Denver, CO 80222
Phone: 303-972-9112 FAX: 303-972-9114
Region 6 RLB

As Constructed
No Revisions:
Revised:
Void:

I-25/SANTA FE INTERCHANGE
I-25 OVER SANTA FE
FOUNDATION LAYOUT

Designer:	M. Keller	Structure Numbers	F-16-XS
Detailer:	S. Fall		
Sheet Subset:	Bridge	Subset Sheets:	B10 of 55

Project No./Code
IM 0254-394
16311
Sheet Number 73

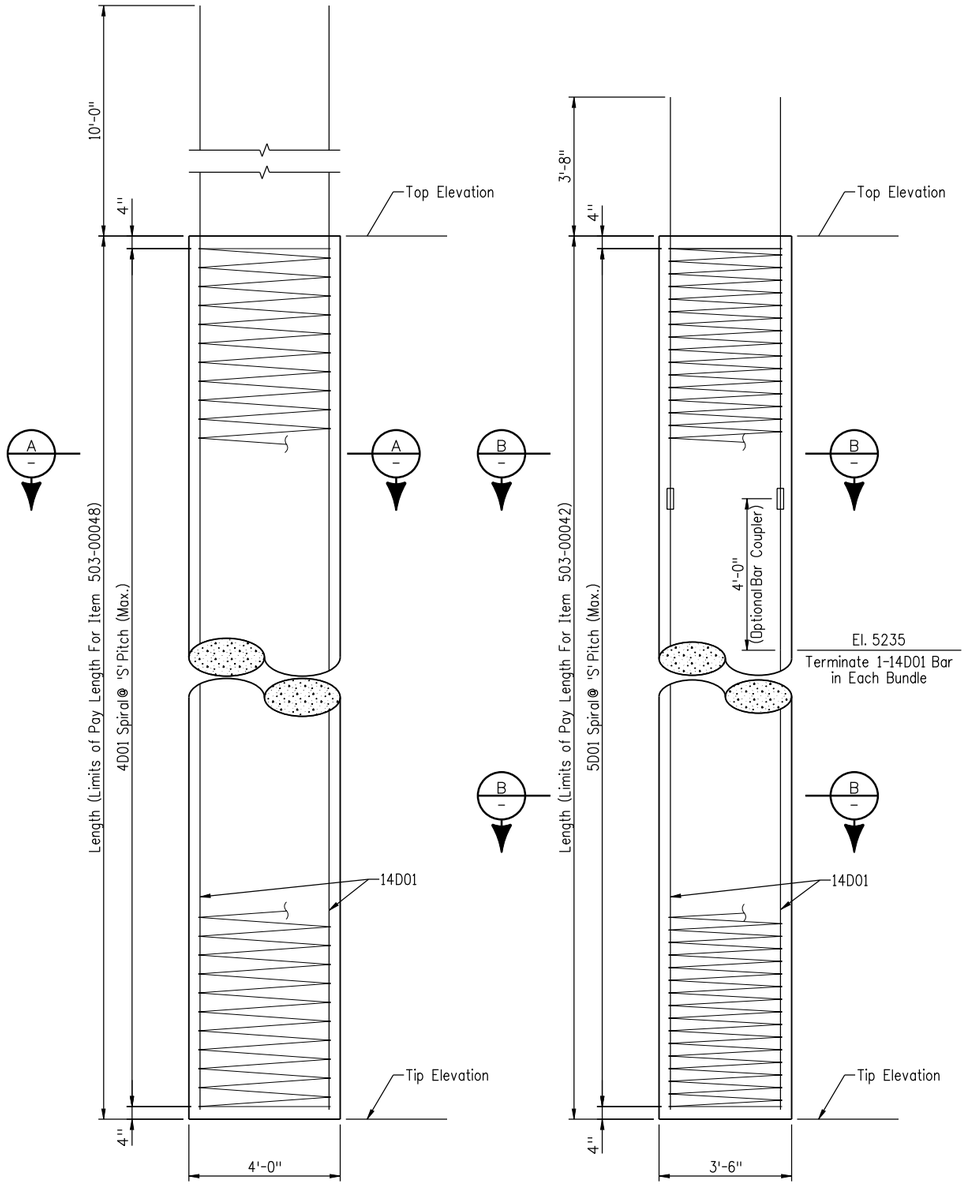

ELEVATION - PIER CAISSON
(Pay Item 503-00048, Drilled Caison (48 Inch))

ELEVATION - ABUTMENT CAISSON
(Pay Item 503-00042, Drilled Caison (42 Inch))

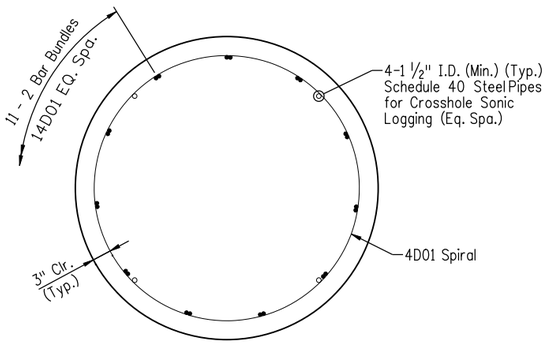

SECTION A (4'-0"ø)

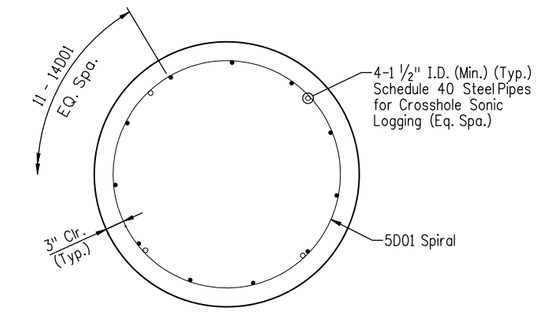

SECTION B (3'-6"ø)

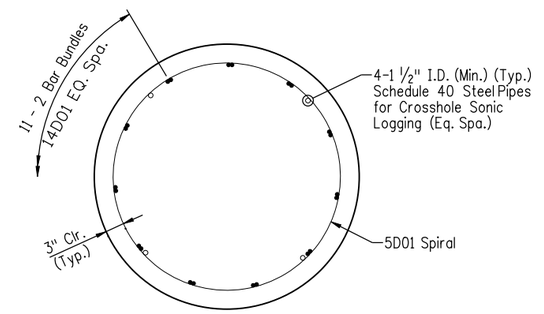

SECTION C (3'-6"ø)

Location	Number Required	Diameter	'S'	**Load (kips)	Min. Rock Socket (ft)	Top Elevation	*Estimated Tip Elevation	*Estimated Length(ft)
Abutment 1	8	3'-6"	4"	1,000	15	5241.30	5190.01	51.29
Bent 2	8	4'-0"	6"	2,200	39	5226..21	5167.10	61.11
Bent 3	8	4'-0"	6"	2,200	39	5224.44	5163.33	61.11
Abutment 4	8	3'-6"	4"	1,000	15	5238.07	5190.01	48.06

*Tip Elevation is an Estimate. Engineer to Verify Actual Tip Elevation Based on Actual Bedrock Elevation and Required Minimum Rock Socket.

**Axial Load is for AASHTO LRFD Strength Load Groups (Factored Loads).
Shaft Resistances As Follows:

Resistance Type		Nominal Resistance	Resistance Factor
Side Resistance In Bedrock	0-1'	-	-
	1'-10'	4 ksf	0.55
	Below 10'	6 ksf	0.55
Base Resistance In Bedrock		125 ksf	0.50

ESTIMATED QUANTITIES

Item Number	Item Description	Unit	Quantity
503-00042	Drilled Caisson (42 Inch)	LF	795
503-00048	Drilled Caisson (48 Inch)	LF	978

LEGEND

4 D 01
- 01 — Bar Number
- D — Drilled Caison
- 4 — Bar Size

NOTES:
1. Temporary Casing is Anticipated for Construction. See Special Provisions for Dewatering and Additional Information.
2. All Drilled Shaft Reinforcing is Non-Epoxy Coated.
3. Extend Spirals ½ Turn Into the Core of the Caisson at Each End.
4. Mechanically couple 14D01 Bars as Required to Achieve Total Length. No Couplers Shall be Located in the Portion of the bar Extending from the Top of the Shaft or Within 10' from the Top of Shaft. Spiral may be Shifted Up or Down to Miss Couplers Provided the Average Spacing 'S' is Maintained.
5. All Drilled Caisson Concrete Shall Use Type V Cement with a 20% Fly Ash Substitution in Accordance with the Project Special Provisions.
6. See Special Provisions for Material Handling of Excavated Material.

(Preliminary Stage Only)

Revision Dates
MM/YY

Design			Detail			Quantities		
	INITIAL	DATE		INITIAL	DATE		INITIAL	DATE
Designed By	XXX	MM/YY	Detailed By	XXX	MM/YY	Quantities By	XXX	MM/YY
Checked By	XXX	MM/YY	Checked By	XXX	MM/YY	Checked By	XXX	MM/YY

sfail 3:33:54 PM G:\Projects\I-25_Santa_Fe\16311\Bridge\Drawings\16311FBE_PH2_09_Drilled_Caisson_Details.dgn
9/27/2010 CDOT-PDFHighQuality_XM.pltcfg CDOT-PenTable.tbl

Print Date: 9/27/2010	Sheet Revisions		
File Name: 16311FBE_PH2_09_Drilled_Caisson_Details.dgn	Date:	Comments	Init.
Horiz. Scale: 1:1 Vert. Scale: As Noted			
Unit Information Unit Leader Initials			
FIGG 1873 S. Bellaire St., STE 1500 Denver CO, 80222			

Colorado Department of Transportation
2000 South Holly Street
Denver, CO 80222
Phone: 303-972-9112 FAX: 303-972-9114
Region 6 RLB

As Constructed
No Revisions:
Revised:
Void:

I-25/SANTA FE INTERCHANGE
I-25 OVER SANTA FE
DRILLED CAISSON DETAILS

Designer:	M. Keller	Structure Numbers	F-16-XS
Detailer:	S. Fall		
Sheet Subset:	Bridge	Subset Sheets:	B11 of 55

Project No./Code
IM 0254-394
16311
Sheet Number 74

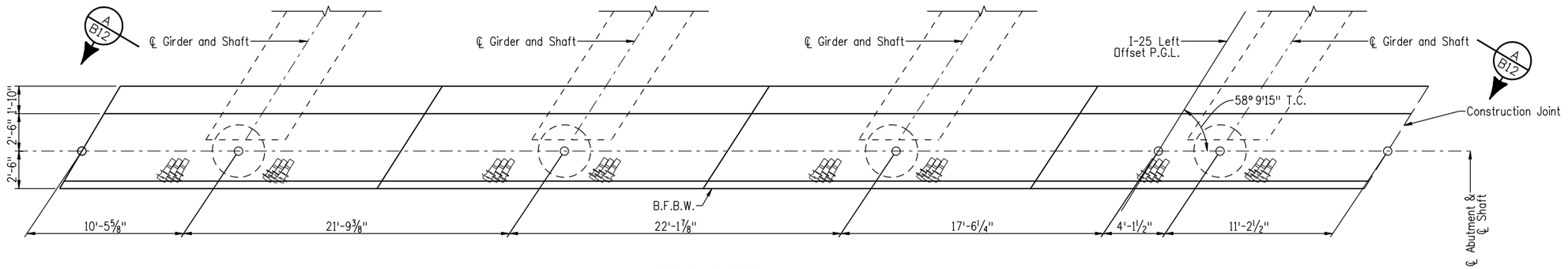

PLAN VIEW
(SB Abutment 1)

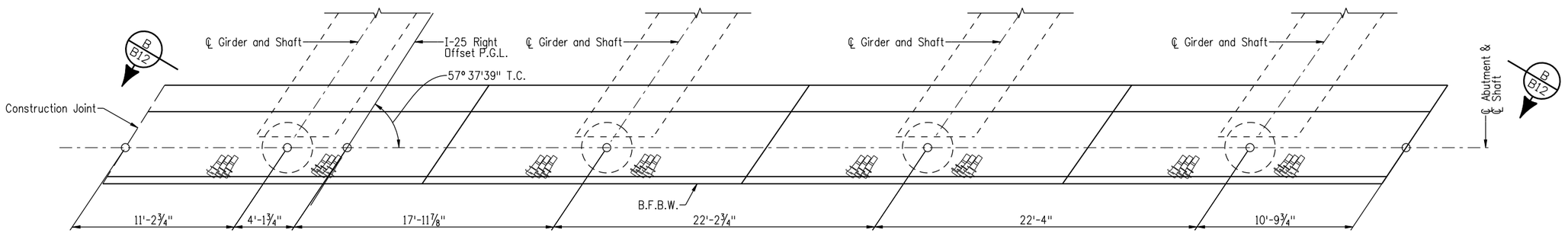

PLAN VIEW
(NB Abutment 1)

NOTES:
1. All Dimension are Taken Along ℄ Abutment.

Design			Detail			Quantities		
	INITIAL	DATE		INITIAL	DATE		INITIAL	DATE
Designed By	XXX	MM/YY	Detailed By	XXX	MM/YY	Quantities By	XXX	MM/YY
Checked By	XXX	MM/YY	Checked By	XXX	MM/YY	Checked By	XXX	MM/YY

Revision Dates (Preliminary Stage Only)
MM/YY

Print Date: 9/27/2010		Sheet Revisions		
File Name: 16311FBE_PH2_11_Abt1_Dims&Reinf1.dgn		Date:	Comments	Init.
Horiz. Scale: 1:1	Vert. Scale: As Noted			
Unit Information	Unit Leader Initials			
FIGG 1873 S. BELLAIRE ST., STE 1500 DENVER CO, 80222				

Colorado Department of Transportation
2000 South Holly Street
Denver, CO 80222
Phone: 303-972-9112 FAX: 303-972-9114
Region 6 RLB

As Constructed
No Revisions:
Revised:
Void:

I-25/SANTA FE INTERCHANGE
I-25 OVER SANTA FE
ABUTMENT 1 DIMENSIONS & REINF.

Designer:	M. Keller	Structure Numbers	F-16-XS
Detailer:	S. Fall		
Sheet Subset:	Bridge	Subset Sheets:	B11 of 56

Project No./Code
IM 0254-394
16311
Sheet Number 75

sfall 3:34:39 PM G:\Projects\I-25_Santa_Fe\16311\Bridge\Drawings\16311FBE_PH2_11_Abt1_Dims&Reinf1.dgn
9/27/2010 CDOT-PDFHighQuality_XM.pltcfg CDOT-PenTable.tbl

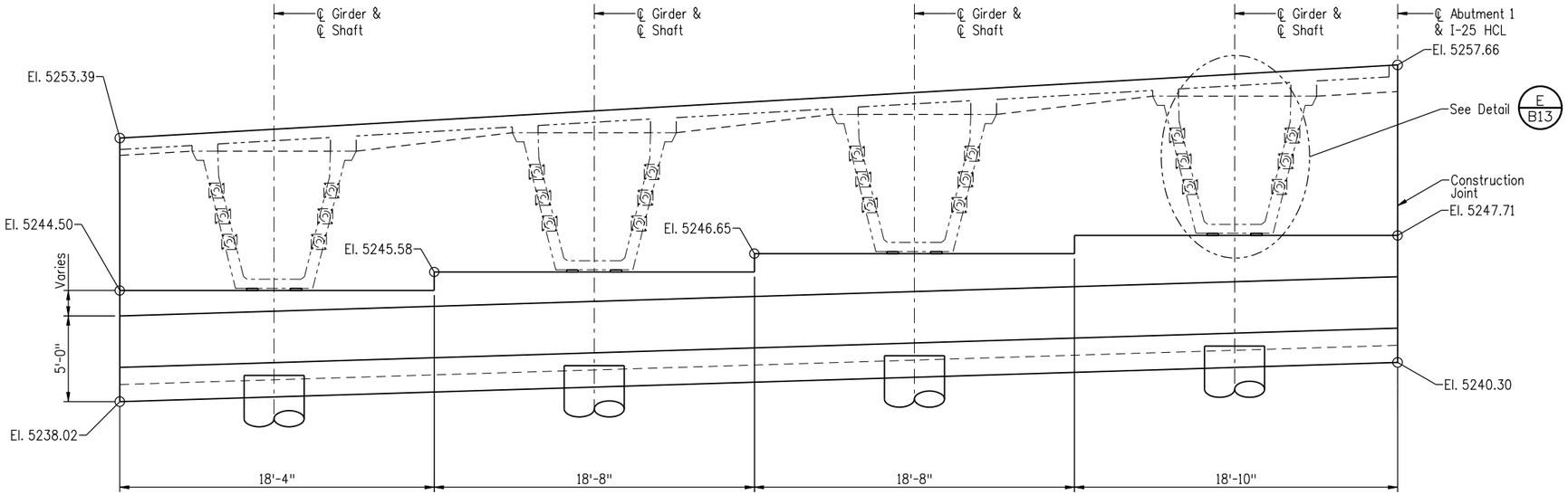

ELEVATION VIEW (B B11)
(I-25 NB, Looking Downstation)

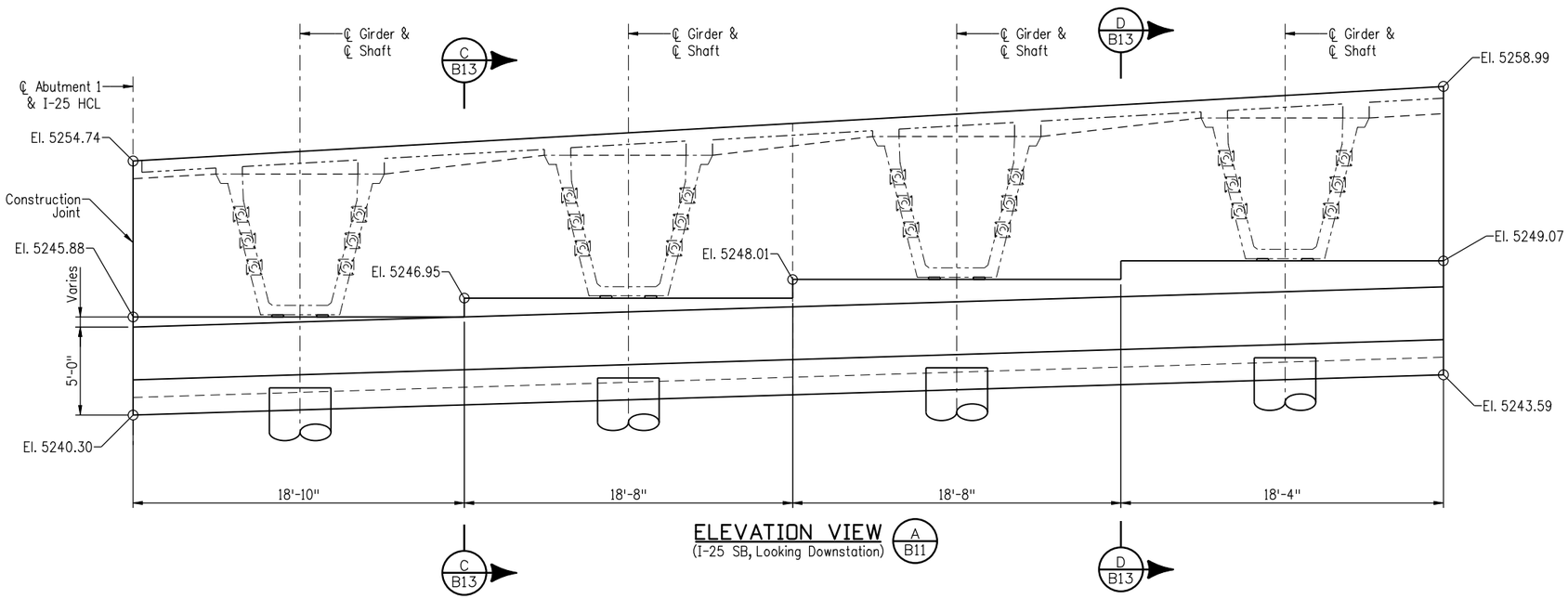

ELEVATION VIEW (A B11)
(I-25 SB, Looking Downstation)

NOTES:
1. This Drawing Valid for Abutment 1.

2. Concrete Cover Shall be 2" Unless Noted Otherwise

Design	INITIAL	DATE
Designed By	XXX	MM/YY
Checked By	XXX	MM/YY

Detail	INITIAL	DATE
Detailed By	XXX	MM/YY
Checked By	XXX	MM/YY

Quantities	INITIAL	DATE
Quantities By	XXX	MM/YY
Checked By	XXX	MM/YY

Revision Dates (Preliminary Stage Only)
MM/YY

Print Date:	9/27/2010
File Name:	16311FBE_PH2_12_Abt1_Dims&Reinf2.dgn
Horiz. Scale:	1:1
Vert. Scale:	As Noted
Unit Information	Unit Leader Initials

FIGG
1873 S. Bellaire St., Ste 1500
Denver CO, 80222

Sheet Revisions

Date:	Comments	Init.

Colorado Department of Transportation
2000 South Holly Street
Denver, CO 80222
Phone: 303-972-9112 FAX: 303-972-9114
Region 6 RLB

As Constructed	
No Revisions:	
Revised:	
Void:	

I-25/SANTA FE INTERCHANGE
I-25 OVER SANTA FE
ABUTMENT 1 DIMENSIONS & REINF. II

Designer:	M. Keller	Structure Numbers	F-16-XS
Detailer:	S. Fall		
Sheet Subset:	Bridge	Subset Sheets:	B12 of 56

Project No./Code	
IM 0254-394	
16311	
Sheet Number	76

sfall 3:35:08 PM G:\Projects\I-25_Santa_Fe\16311\Bridge\Drawings\16311FBE_PH2_12_Abt1_Dims&Reinf2.dgn
9/27/2010 CDOT-PDFHighQuality_XM.pltcfg CDOT-PenTable.tbl

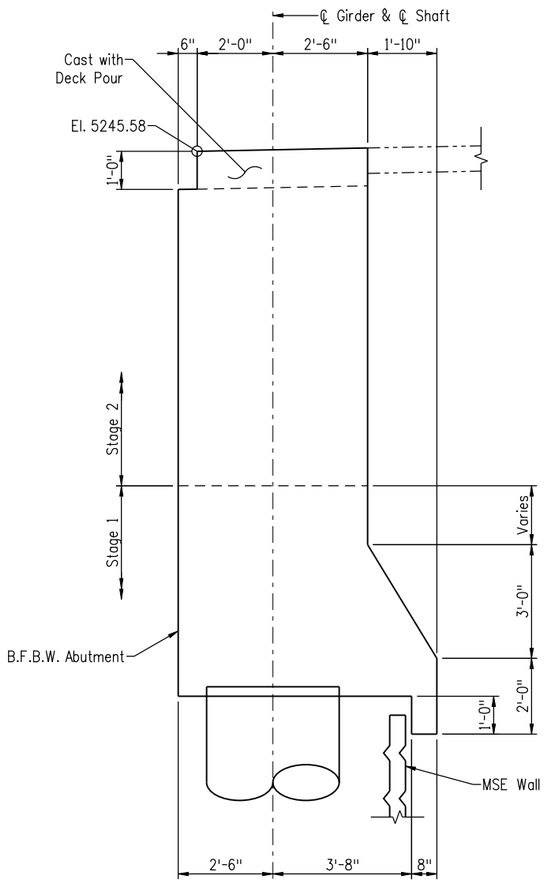

SECTION C / B12

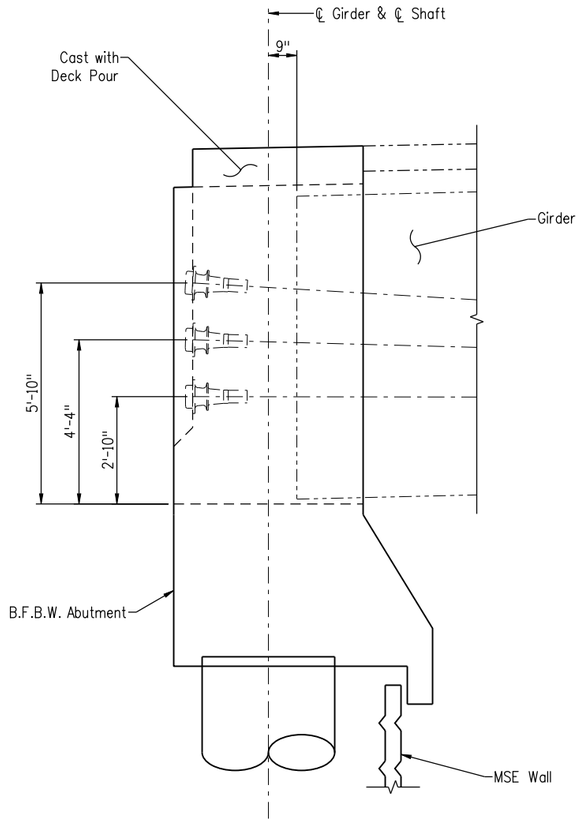

SECTION D / B12

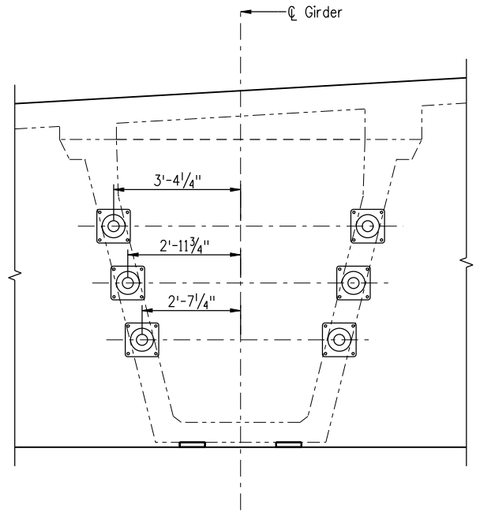

DETAIL E / B12

(Typical Post-Tensioning Anchorage Location at Each Girder for Abutment1)

NOTES:
1. This Drawing Valid for Abutment 1.

2. Concrete Cover Shall be 2" Unless Noted Otherwise

Design	INITIAL	DATE
Designed By	XXX	MM/YY
Checked By	XXX	MM/YY

Detail	INITIAL	DATE
Detailed By	XXX	MM/YY
Checked By	XXX	MM/YY

Quantities	INITIAL	DATE
Quantities By	XXX	MM/YY
Checked By	XXX	MM/YY

Revision Dates (Preliminary Stage Only)
MM/YY

Print Date: 9/27/2010
File Name: 16311FBE_PH2_13_Abt1_Dims&Reinf3.dgn
Horiz. Scale: 1:1 Vert. Scale: As Noted
Unit Information Unit Leader Initials

FIGG
1873 S. Bellaire St., Ste 1500
Denver CO, 80222

Sheet Revisions		
Date:	Comments	Init.

Colorado Department of Transportation
2000 South Holly Street
Denver, CO 80222
Phone: 303-972-9112 FAX: 303-972-9114
Region 6 RLB

As Constructed
No Revisions:
Revised:
Void:

I-25/SANTA FE INTERCHANGE
I-25 OVER SANTA FE
ABUTMENT 1 DIMENSIONS & REINF. III

Designer: M. Keller
Detailer: S. Fall
Sheet Subset: Bridge
Structure Numbers: F-16-XS
Subset Sheets: B12 of 56

Project No./Code
IM 0254-394
16311
Sheet Number 77

sfall 3:35:33 PM G:\Projects\I-25_Santa_Fe\16311\Bridge\Drawings\16311FBE_PH2_13_Abt1_Dims&Reinf3.dgn
9/27/2010 CDOT-PDFHighQuality_XM.pltcfg CDOT-PenTable.tbl

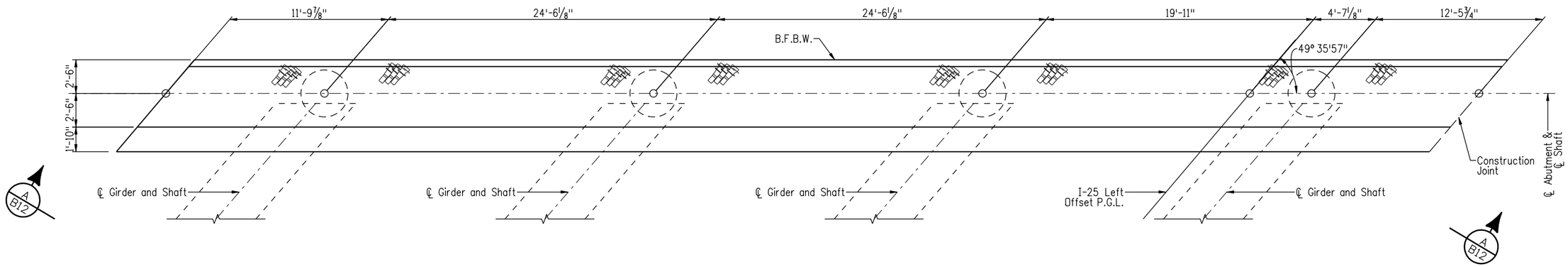

PLAN VIEW
(SB Abutment 4)

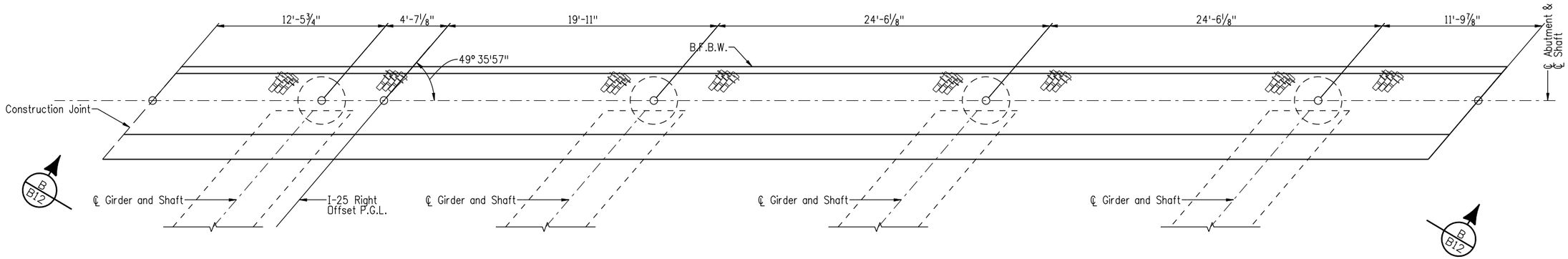

PLAN VIEW
(NB Abutment 4)

NOTES:
1. All Dimension are Taken Along ℄ Abutment.

Design	INITIAL	DATE
Designed By	XXX	MM/YY
Checked By	XXX	MM/YY

Detail	INITIAL	DATE
Detailed By	XXX	MM/YY
Checked By	XXX	MM/YY

Quantities	INITIAL	DATE
Quantities By	XXX	MM/YY
Checked By	XXX	MM/YY

Revision Dates (Preliminary Stage Only)
MM/YY

Print Date: 9/27/2010
File Name: 16311FBE_PH2_15_Abt4_Dims&Reinf1.dgn
Horiz. Scale: 1:1 Vert. Scale: As Noted
Unit Information Unit Leader Initials

FIGG
1873 S. BELLAIRE ST., STE 1500
DENVER CO, 80222

Sheet Revisions		
Date:	Comments	Init.

Colorado Department of Transportation
DEPARTMENT OF TRANSPORTATION
2000 South Holly Street
Denver, CO 80222
Phone: 303-972-9112 FAX: 303-972-9114
Region 6 RLB

As Constructed
No Revisions:
Revised:
Void:

I-25/SANTA FE INTERCHANGE
I-25 OVER SANTA FE
ABUTMENT 4 DIMENSIONS & REINF. I

Designer: M. Keller
Detailer: S. Fall
Sheet Subset: Bridge
Structure Numbers: F-16-XS
Subset Sheets: B11 of 56

Project No./Code
IM 0254-394
16311
Sheet Number 78

sfall 3:36:32 PM G:\Projects\I-25_Santa_Fe\16311\Bridge\Drawings\16311FBE_PH2_15_Abt4_Dims&Reinf1.dgn
9/27/2010 CDOT-PDFHighQuality_XM.pltcfg CDOT-PenTable.tbl

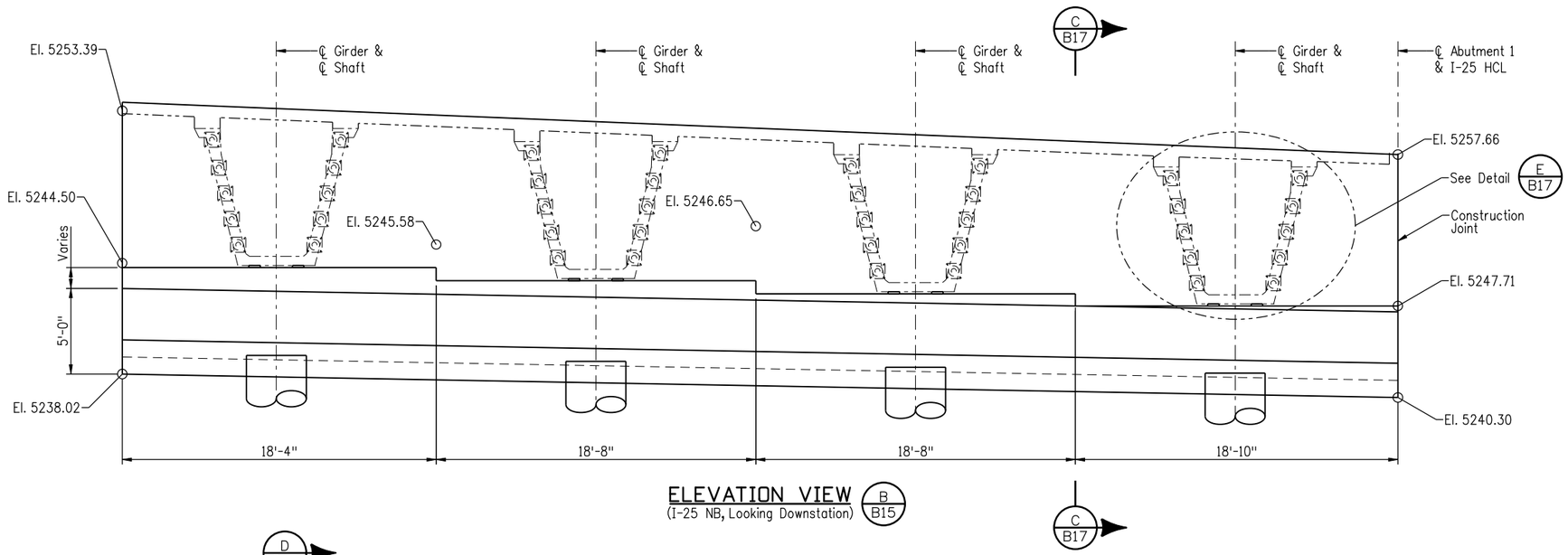

ELEVATION VIEW (I-25 NB, Looking Downstation) B B15

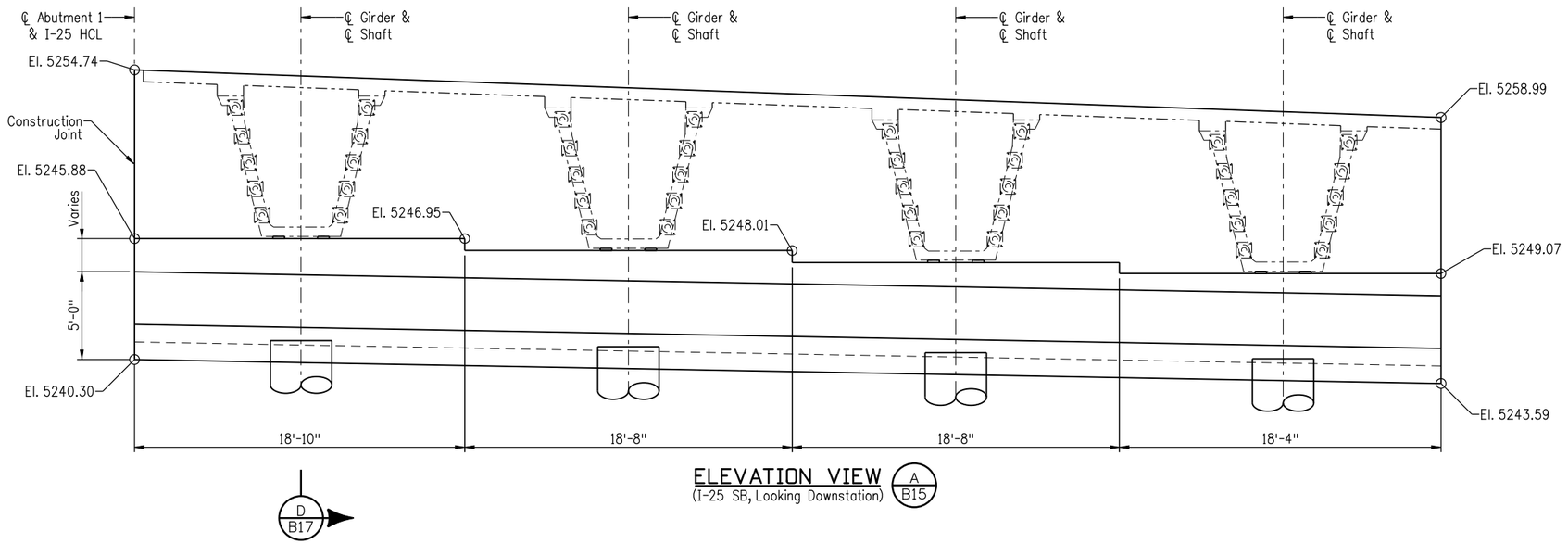

ELEVATION VIEW (I-25 SB, Looking Downstation) A B15

NOTES:
1. This Drawing Valid for Abutment 4.

2. Concrete Cover Shallbe 2" Unless Noted Otherwise

Design	INITIAL	DATE
Designed By	XXX	MM/YY
Checked By	XXX	MM/YY

Detail	INITIAL	DATE
Detailed By	XXX	MM/YY
Checked By	XXX	MM/YY

Quantities	INITIAL	DATE
Quantities By	XXX	MM/YY
Checked By	XXX	MM/YY

Revision Dates (Preliminary Stage Only)	MM/YY

Print Date: 9/27/2010
File Name: 16311FBE_PH2_16_Abt4_Dims&Reinf2.dgn
Horiz. Scale: 1:1 Vert. Scale: As Noted
Unit Information Unit Leader Initials

FIGG
1873 S. BELLAIRE ST., STE 1500
DENVER CO, 80222

Sheet Revisions		
Date:	Comments	Init.

Colorado Department of Transportation
2000 South Holly Street
Denver, CO 80222
Phone: 303-972-9112 FAX: 303-972-9114
Region 6 RLB

As Constructed
No Revisions:
Revised:
Void:

I-25/SANTA FE INTERCHANGE
I-25 OVER SANTA FE
ABUTMENT 4 DIMENSIONS & REINF. II

Designer:	M. Keller	Structure Numbers	F-16-XS
Detailer:	S. Fall		
Sheet Subset:	Bridge	Subset Sheets:	B12 of 56

Project No./Code
IM 0254-394
16311
Sheet Number 79

sfall 5:13:09 PM G:\Projects\I-25_Santa_Fe\16311\Bridge\Drawings\16311FBE_PH2_16_Abt4_Dims&Reinf2.dgn
9/27/2010 CDOT-PDFHighQuality_XM.pltcfg CDOT-PenTable.tbl

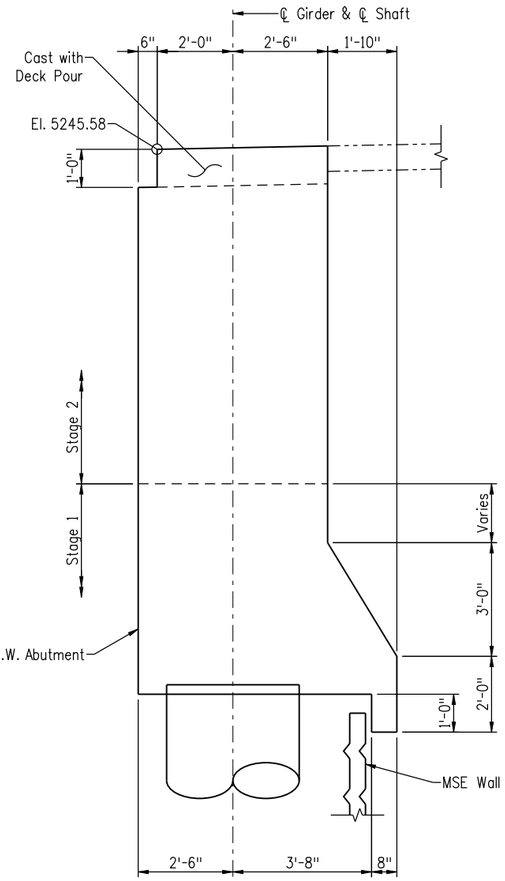

SECTION C / B16

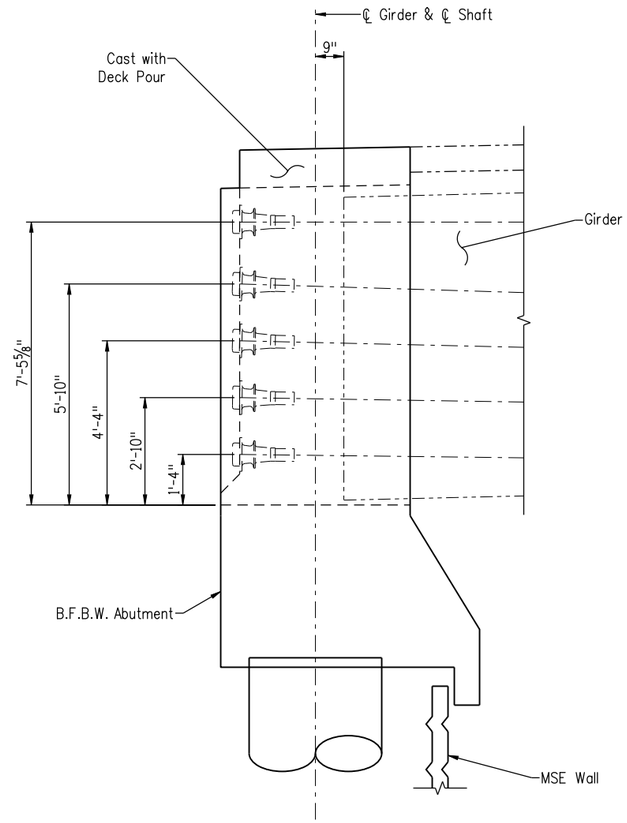

SECTION D / B16

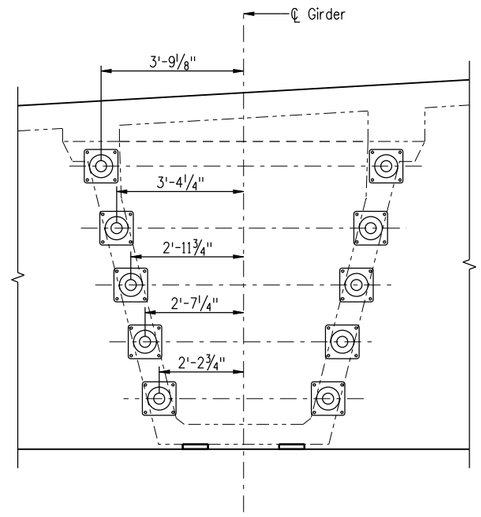

DETAIL E / B16

(Typical Post-Tensioning Anchorage Location at Each Girder for Abutment 4)

NOTES:
1. This Drawing Valid for Abutment 4.

2. Concrete Cover Shall be 2" Unless Noted Otherwise

Design	INITIAL	DATE
Designed By	XXX	MM/YY
Checked By	XXX	MM/YY

Detail	INITIAL	DATE
Detailed By	XXX	MM/YY
Checked By	XXX	MM/YY

Quantities	INITIAL	DATE
Quantities By	XXX	MM/YY
Checked By	XXX	MM/YY

Revision Dates (Preliminary Stage Only)	MM/YY

Print Date: 9/27/2010	
File Name: 16311FBE_PH2_17_Abt4_Dims&Reinf3.dgn	
Horiz. Scale: 1:1 Vert. Scale: As Noted	
Unit Information Unit Leader Initials	
FIGG 1873 S. Bellaire St., Ste 1500 Denver CO, 80222	

Sheet Revisions		
Date:	Comments	Init.

Colorado Department of Transportation
DEPARTMENT OF TRANSPORTATION
2000 South Holly Street
Denver, CO 80222
Phone: 303-972-9112 FAX: 303-972-9114
Region 6 RLB

As Constructed	
No Revisions:	
Revised:	
Void:	

I-25/SANTA FE INTERCHANGE
I-25 OVER SANTA FE
ABUTMENT 4 DIMS. & REINF. III

Designer:	M. Keller	Structure Numbers	F-16-XS
Detailer:	S. Fall		
Sheet Subset:	Bridge	Subset Sheets:	B12 of 56

Project No./Code	
IM 0254-394	
16311	
Sheet Number	80

sfall 3:37:39 PM G:\Projects\I-25_Santa_Fe\16311\Bridge\Drawings\16311FBE_PH2_17_Abt4_Dims&Reinf3.dgn
9/27/2010 CDOT-PDFHighQuality_XM.pltcfg CDOT-PenTable.tbl

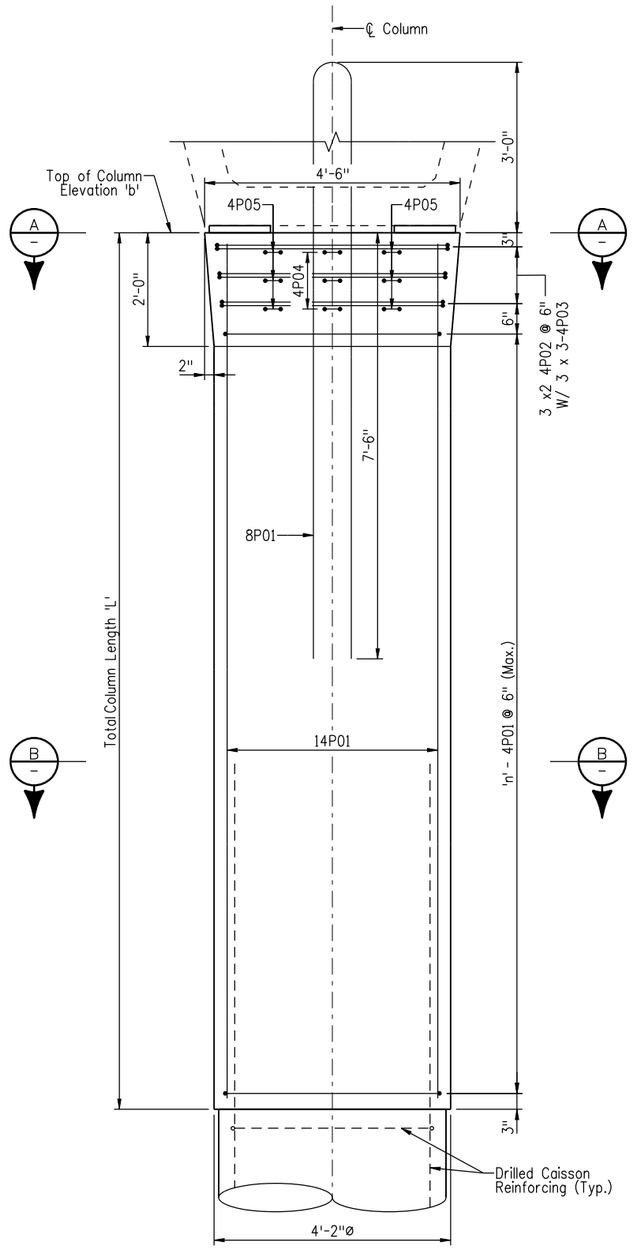

ELEVATION
(Looking Ahead Station)

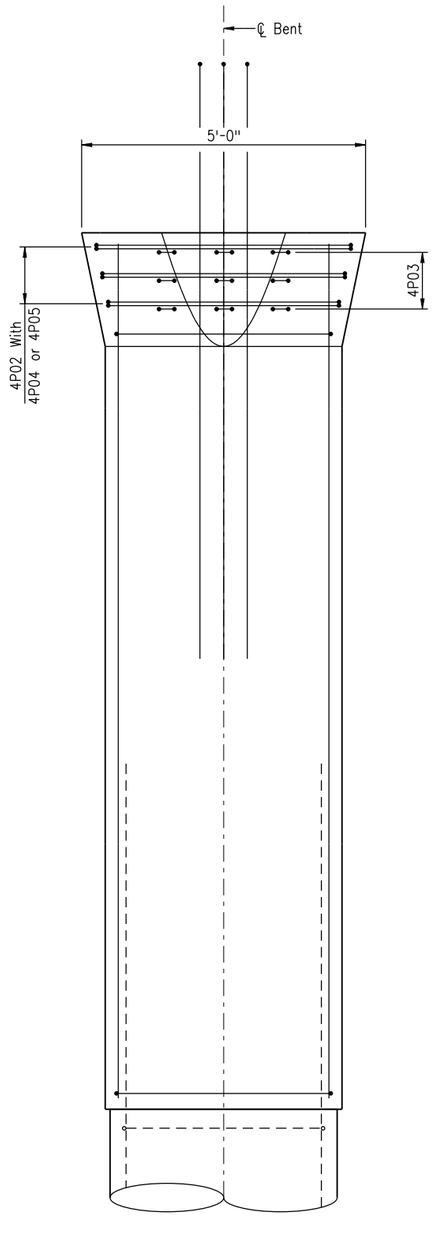

SIDE VIEW

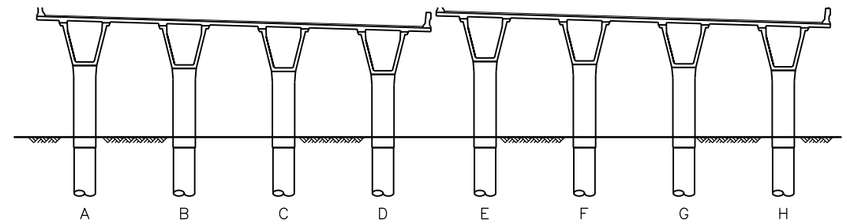

PIER COLUMN LEGEND
(Looking Ahead Station)

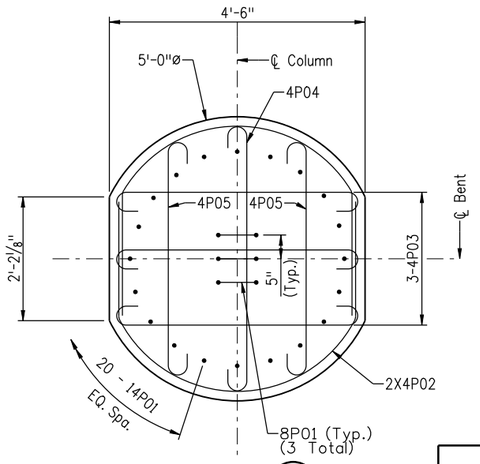

SECTION A

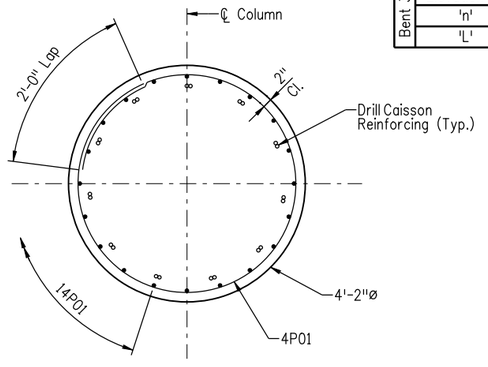

SECTION B

VARIABLE DIMENSIONS		Column							
		'A'	'B'	'C'	'D'	'E'	'F'	'G'	'H'
Bent 2	Elevation 'b'	–	–	–	–	–	–	–	–
	'n'	–	–	–	–	–	–	–	–
	'L'	–	–	–	–	–	–	–	–
Bent 3	Elevation 'b'	–	–	–	–	–	–	–	–
	'n'								
	'L'								

NOTES:
1. For Horizontal Location of Pier Columns, See Foundation Layout Drawings.
2. For Pier Diaphragm Information, See Pier Diaphragm Dimensions and Reinforcing Sheets.
3. For Dowel Call-Out and Placement, See Drilled Caisson Details Sheet.
4. Reinforcing Cover Shall be 2" Unless Noted Otherwise.
5. All Pier Concrete Shall use Type V Cement with a 20% Fly Ash Substitution in Accordance with the Project Special Provisions.
6. Rotate Lap Splices for 4P01 Ties 180° on Alternating Ties. Contractor May Substitute a Spiral of Equal Size and Pitch for the 4P01 Bars. If Substituted the Spiral Shall Extend ½ Turn Into the Core of the Pier at Each End.

Design	INITIAL	DATE	Detail	INITIAL	DATE	Quantities	INITIAL	DATE
Designed By	XXX	MM/YY	Detailed By	XXX	MM/YY	Quantities By	XXX	MM/YY
Checked By	XXX	MM/YY	Checked By	XXX	MM/YY	Checked By	XXX	MM/YY

Revision Dates (Preliminary Stage Only)
MM/YY

sfoll 3:38:23 PM G:\Projects\I-25_Santa_Fe\16311\Bridge\Drawings\16311FBE_PH2_19_Pier_Dim_Reinf.dgn
9/27/2010 CDOT-PDFHighQuality_XM.pltcfg CDOT-PenTable.tbl

Print Date: 9/27/2010
File Name: 16311FBE_PH2_19_Pier_Dim_Reinf.dgn
Horiz. Scale: 1:1 Vert. Scale: As Noted
Unit Information Unit Leader Initials

FIGG
1873 S. Bellaire St., Ste 1500
Denver CO, 80222

Sheet Revisions		
Date:	Comments	Init.

Colorado Department of Transportation
2000 South Holly Street
Denver, CO 80222
Phone: 303-972-9112 FAX: 303-972-9114
Region 6 RLB

As Constructed
No Revisions:
Revised:
Void:

I-25/SANTA FE INTERCHANGE
I-25 OVER SANTA FE
PIER COLUMN DIMS. & REINF. I

Designer: M. Keller
Detailer: S. Fall
Sheet Subset: Bridge
Structure Numbers: F-16-XS
Subset Sheets: B19 of 56

Project No./Code
IM 0254-394
16311
Sheet Number 81

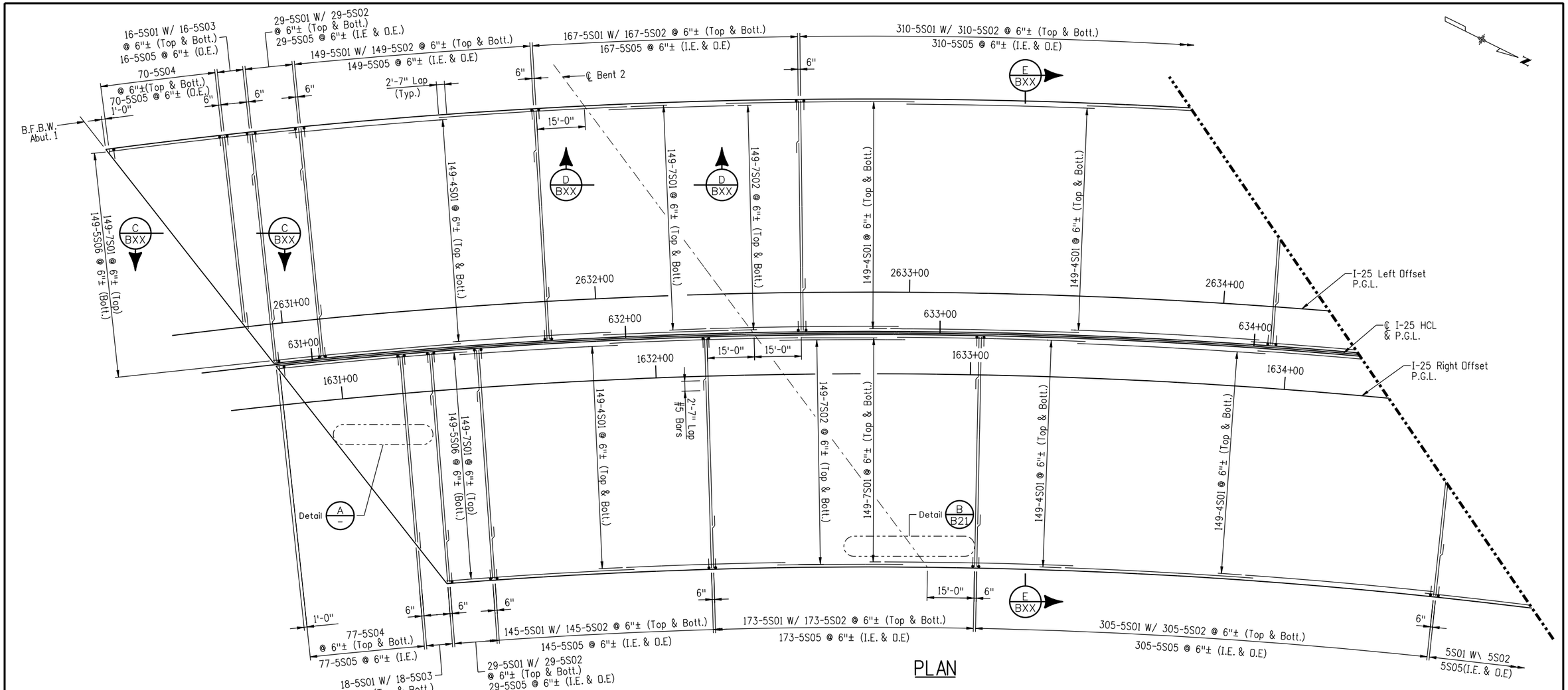

PLAN

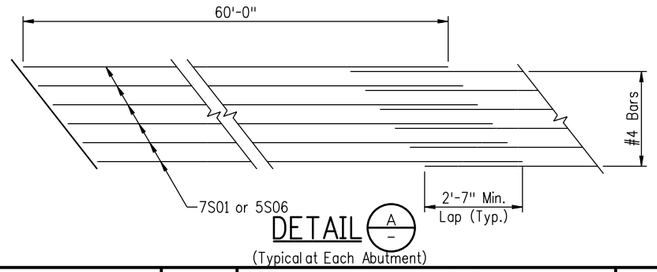

DETAIL A – (Typical at Each Abutment)

NOTES:
1. For I-25 Horizontal Control Data, See General Layout Sheet.
2. Place Transverse Reinforcing Bars Perpendicular to ℄ I-25 HCL. Dimensions Provided are Along I-25 HCL. Alternate Splices as Shown.
3. Concrete Cover Shall be:
   2" Top of Deck
   1" Bottom of Deck
   1 ½" Other Exterior Surfaces
4. Barrier Reinforcing Bars not Shown Clarity. See Bridge Rail Details Sheets.
5. I.E. Denotes Inside Edge
   O.E Denotes Outside Edge.

Design	INITIAL	DATE
Designed By	XXX	MM/YY
Checked By	XXX	MM/YY

Detail	INITIAL	DATE
Detailed By	XXX	MM/YY
Checked By	XXX	MM/YY

Quantities	INITIAL	DATE
Quantities By	XXX	MM/YY
Checked By	XXX	MM/YY

Revision Dates (Preliminary Stage Only)	MM/YY

Print Date: 9/27/2010
File Name: 16311FBE_PH2_21_Deck_Reinf-I.dgn
Horiz. Scale: 1:1 Vert. Scale: As Noted
Unit Information Unit Leader Initials

FIGG
1873 S. Bellaire St., STE 1500
Denver CO, 80222

Sheet Revisions

Date:	Comments	Init.

Colorado Department of Transportation
2000 South Holly Street
Denver, CO 80222
Phone: 303-972-9112 FAX: 303-972-9114
Region 6 RLB

As Constructed
No Revisions:
Revised:
Void:

I-25/SANTA FE INTERCHANGE
I-25 OVER SANTA FE
DECK REINFORCING I

Designer:	M. Keller	Structure Numbers	F-16-XS
Detailer:	S. Fall		
Sheet Subset:	Bridge	Subset Sheets:	B20 of 55

Project No./Code
IM 0254-394
16311
Sheet Number 82

sfall 4:19:51 PM G:\Projects\I-25_Santa_Fe\16311\Bridge\Drawings\16311FBE_PH2_21_Deck_Reinf-I.dgn
9/27/2010 CDOT-PDFHighQuality_XM.pltcfg CDOT-PenTable.tbl

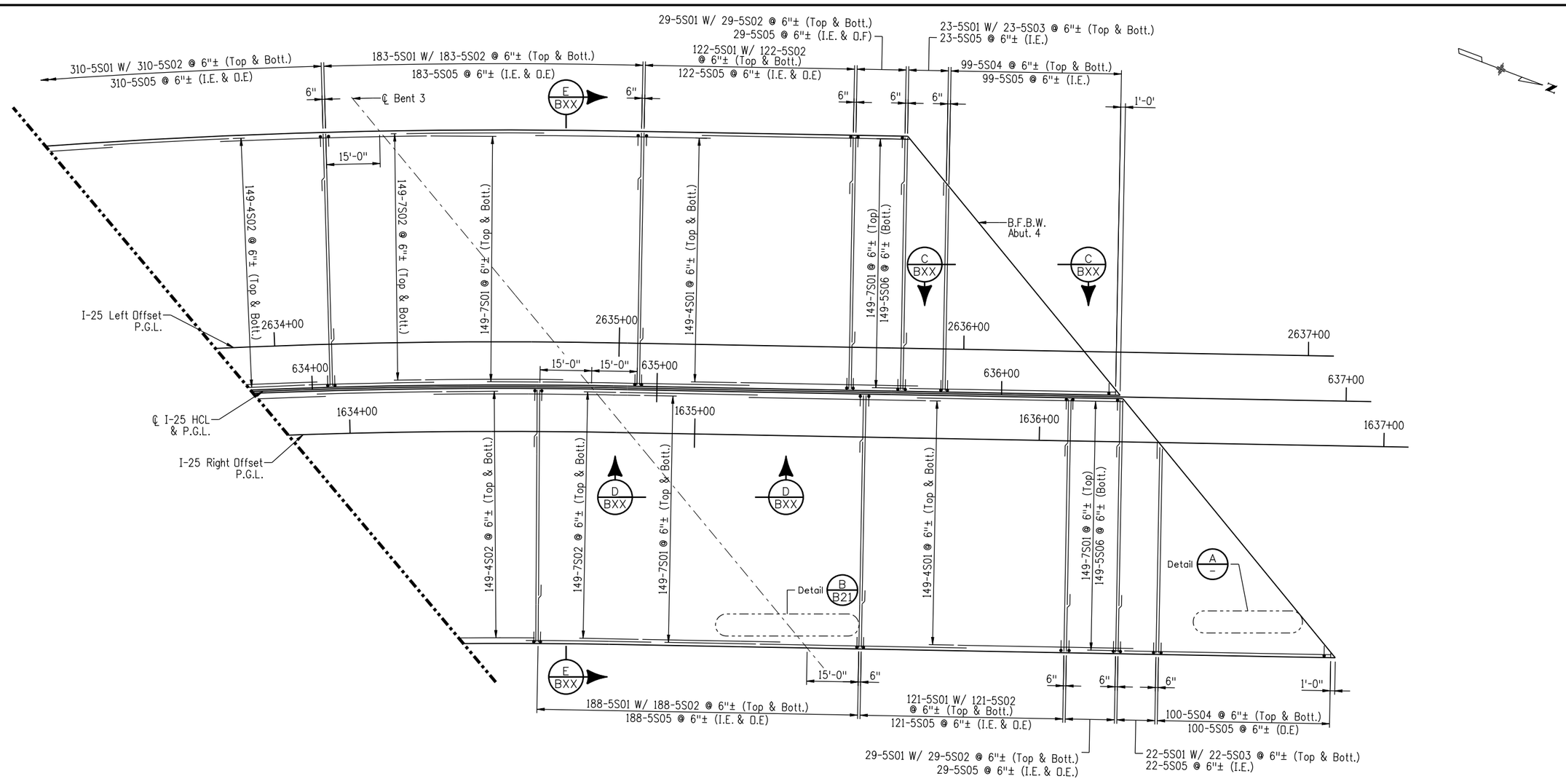

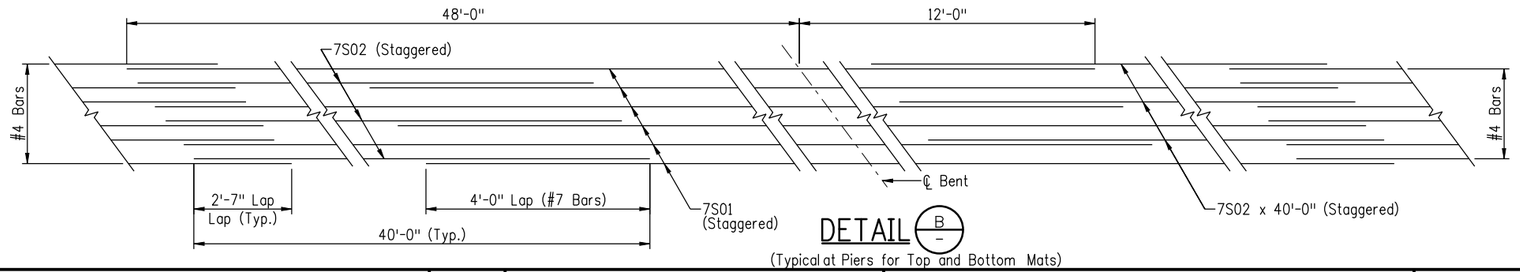

DETAIL B –
(Typical at Piers for Top and Bottom Mats)

NOTES:
1. For I-25 Horizontal Control Data, See General Layout Sheet.
2. Place Transverse Reinforcing Bars Perpendicular to ℄ I-25 HCL. Dimensions Provided are Along I-25 HCL. Alternate Splices as Shown.
3. Concrete Cover Shall be:
   2" Top of Deck
   1" Bottom of Deck
   1 ½" Other Exterior Surfaces
4. Barrier Reinforcing Bars not Shown Clarity. See Bridge Rail Details Sheets.
5. I.E. Denotes Inside Edge
   O.E Denotes Outside Edge.

Design	INITIAL	DATE
Designed By	XXX	MM/YY
Checked By	XXX	MM/YY

Detail	INITIAL	DATE
Detailed By	XXX	MM/YY
Checked By	XXX	MM/YY

Quantities	INITIAL	DATE
Quantities By	XXX	MM/YY
Checked By	XXX	MM/YY

Revision Dates (Preliminary Stage Only)
MM/YY

Print Date: 9/27/2010
File Name: 16311FBE_PH2_22_Deck_Reinf-II.dgn
Horiz. Scale: 1:1 Vert. Scale: As Noted
Unit Information Unit Leader Initials

FIGG
1873 S. Bellaire St., Ste 1500
Denver CO, 80222

Sheet Revisions

Date:	Comments	Init.

Colorado Department of Transportation
2000 South Holly Street
Denver, CO 80222
Phone: 303-972-9112 FAX: 303-972-9114
Region 6 RLB

As Constructed
No Revisions:
Revised:
Void:

I-25/SANTA FE INTERCHANGE
I-25 OVER SANTA FE
DECK REINFORCING II

Designer: M. Keller
Detailer: S. Fall
Sheet Subset: Bridge
Structure Numbers: F-16-XS
Subset Sheets: B21 of 55

Project No./Code
IM 0254-394
16311
Sheet Number 83

sfall 4:16:50 PM G:\Projects\I-25_Santa_Fe\16311\Bridge\Drawings\16311FBE_PH2_22_Deck_Reinf-II.dgn
9/27/2010 CDOT-PDFHighQuality_XM.pltcfg CDOT-PenTable.tbl

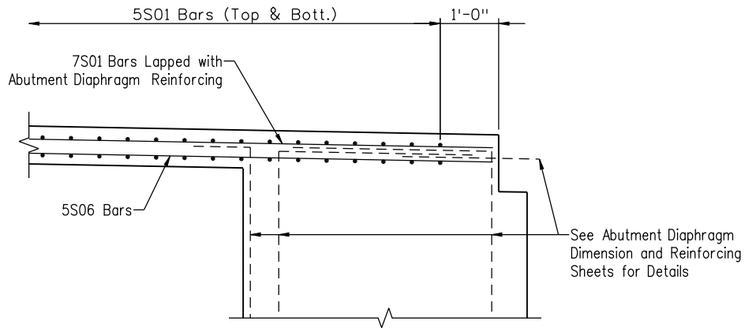

SECTION C
(Section at Abutments)

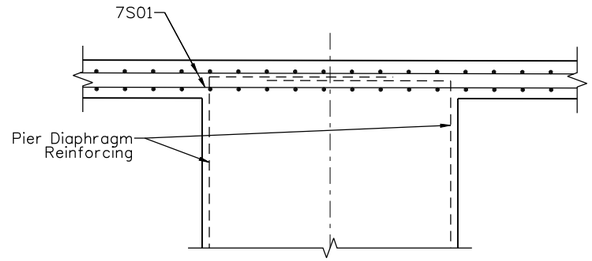

SECTION D
(Section at Pier Diaphragm)

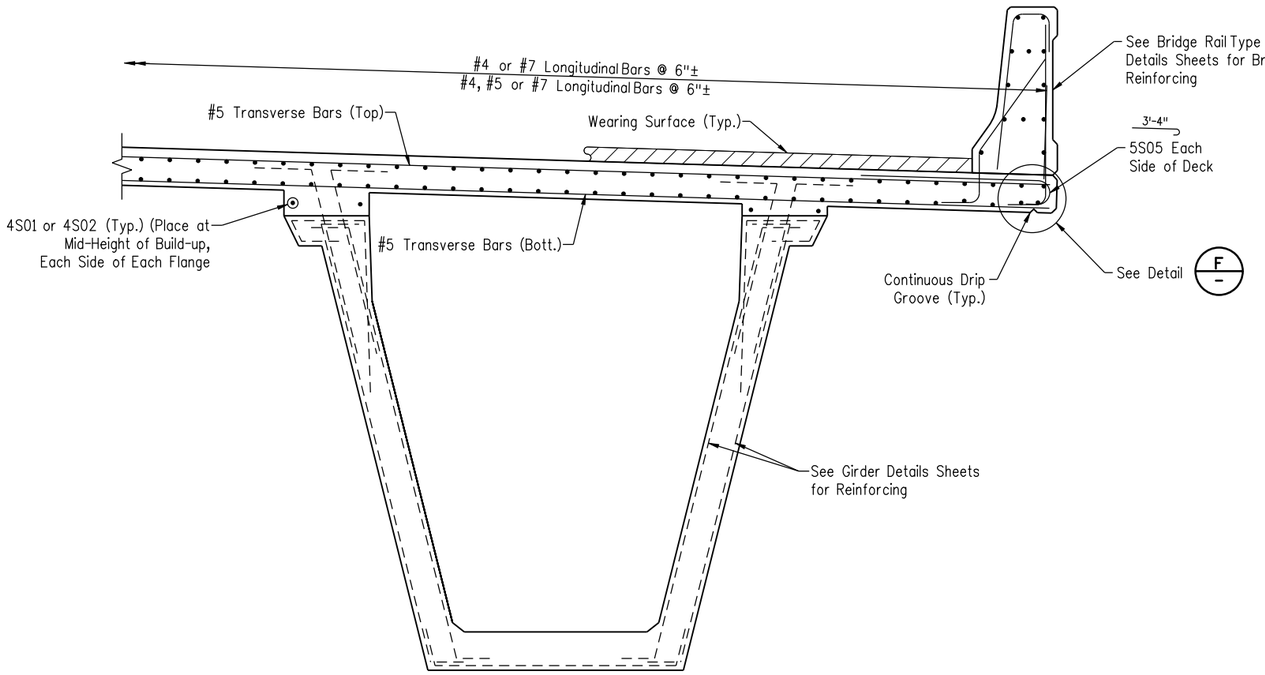

SECTION E
(3'-6"ø)

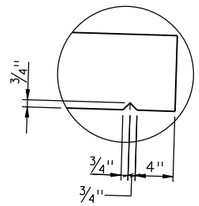

DETAIL F
(Drip Groove Detail)

NOTES:

1. Concrete Cover Shall be:
   2" Top of Deck
   1" Bottom of Deck
   1 ½" Other Exterior Surfaces

Design			Detail			Quantities		
	INITIAL	DATE		INITIAL	DATE		INITIAL	DATE
Designed By	XXX	MM/YY	Detailed By	XXX	MM/YY	Quantities By	XXX	MM/YY
Checked By	XXX	MM/YY	Checked By	XXX	MM/YY	Checked By	XXX	MM/YY

Revision Dates (Preliminary Stage Only)
MM/YY

Print Date: 9/27/2010	Sheet Revisions		
File Name: 16311FBE_PH2_23_Deck_Reinf-III.dgn	Date:	Comments	Init.
Horiz. Scale: 1:1 Vert. Scale: As Noted			
Unit Information Unit Leader Initials			
FIGG 1873 S. Bellaire St., STE 1500 Denver CO, 80222			

Colorado Department of Transportation
2000 South Holly Street
Denver, CO 80222
Phone: 303-972-9112 FAX: 303-972-9114
Region 6 RLB

As Constructed
No Revisions:
Revised:
Void:

I-25/SANTA FE INTERCHANGE
I-25 OVER SANTA FE
DECK REINFORCING III

Designer: M. Keller
Detailer: S. Fall
Sheet Subset: Bridge
Structure Numbers: F-16-XS
Subset Sheets: B10 of 55

Project No./Code
IM 0254-394
16311
Sheet Number 84

sfall 4:21:40 PM G:\Projects\I-25_Santa_Fe\16311\Bridge\Drawings\16311FBE_PH2_23_Deck_Reinf-III.dgn
9/27/2010 CDOT-PDFHighQuality_XM.pltcfg CDOT-PenTable.tbl

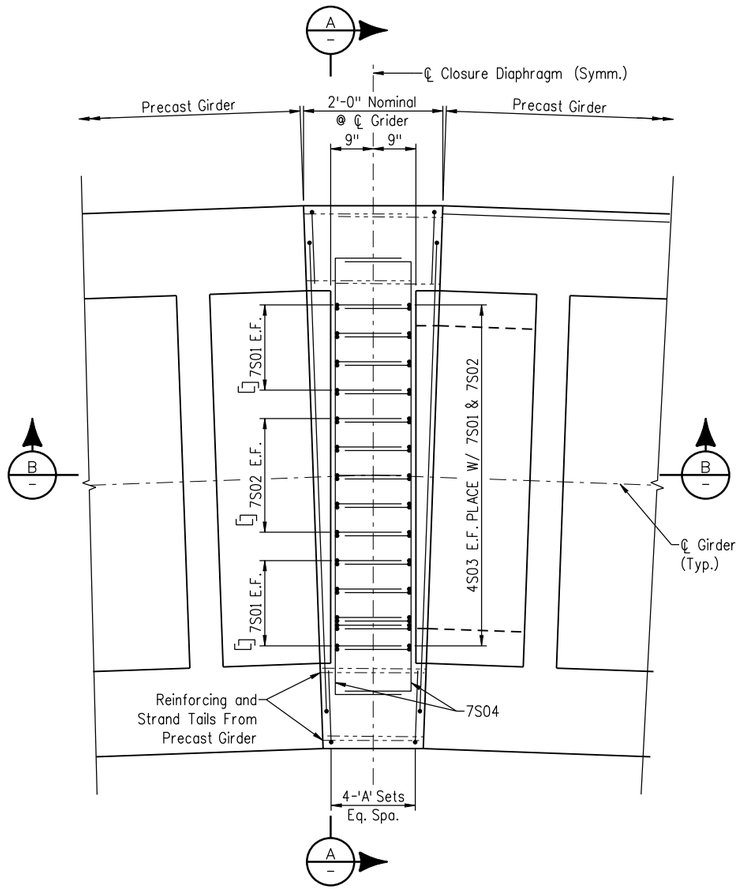

PLAN VIEW
(Typical Closure Diaphragm)

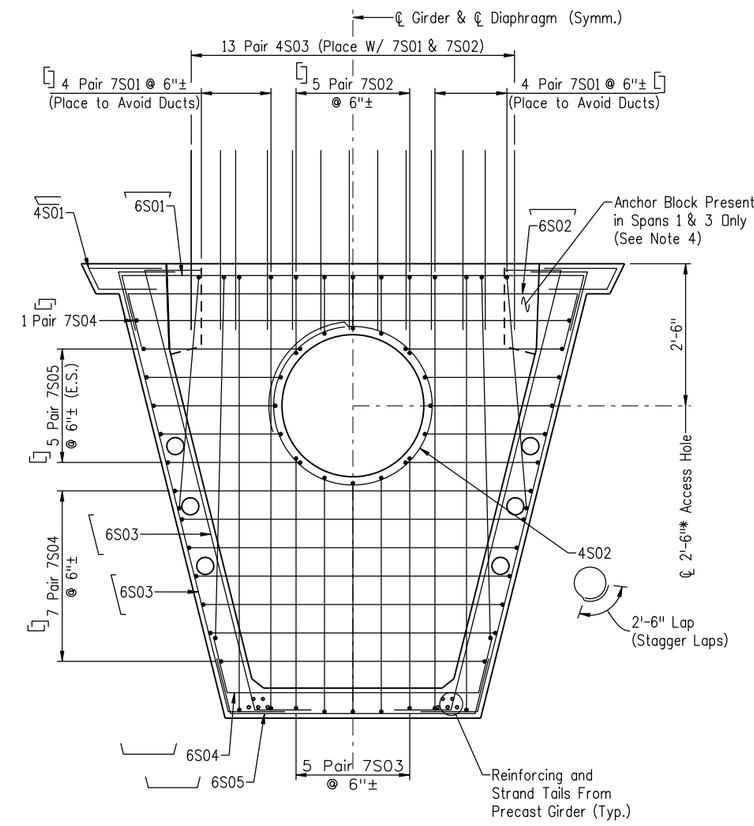

SECTION A

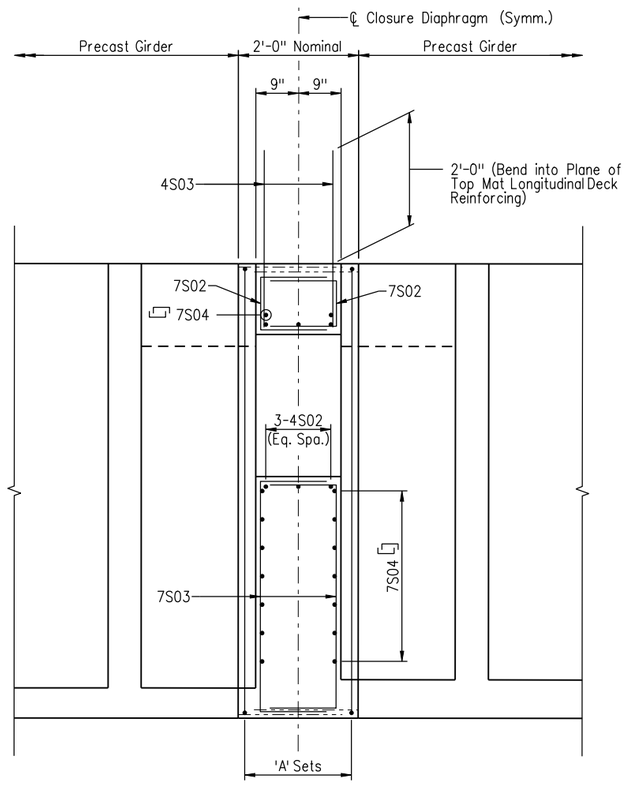

SECTION B

NOTES:

1. Closure Concrete is Class S50, f'c = 7250 PSI.
2. Reinforcing in Closure and Projecting from Girder Into Closure Shall be Epoxy Coated.
3. Concrete Cover Shall be 1" Minimum.
4. Pour Extension of Anchor Block Into Diaphragm to Encapsulate Post-Tensioning Anchorage.
5. 1-'A' Set Consists of: 2-4S01, 1-6S01, 1-6S02, 4-6S03, 1-6S04 & 1-6S05.

(Preliminary Stage Only)

Revision Dates
MM/YY

Design			Detail			Quantities		
	INITIAL	DATE		INITIAL	DATE		INITIAL	DATE
Designed By	XXX	MM/YY	Detailed By	XXX	MM/YY	Quantities By	XXX	MM/YY
Checked By	XXX	MM/YY	Checked By	XXX	MM/YY	Checked By	XXX	MM/YY

Print Date: 9/27/2010	
File Name: 16311FBE_PH2_24_Closure_Diaph_Dim_Reinf.dgn	
Horiz. Scale: 1:1	Vert. Scale: As Noted
Unit Information	Unit Leader Initials

FIGG
1873 S. BELLAIRE ST., STE 1500
FIGG DENVER CO, 80222

Sheet Revisions		
Date:	Comments	Init.

Colorado Department of Transportation
DEPARTMENT OF TRANSPORTATION
2000 South Holly Street
Denver, CO 80222
Phone: 303-972-9112 FAX: 303-972-9114
Region 6 RLB

As Constructed
No Revisions:
Revised:
Void:

I-25/SANTA FE INTERCHANGE
I-25 OVER SANTA FE
CLOSURE DIAPHRAGM DIMS. & REINF.

Designer: K. Montgomery		Structure Numbers	F-16-XS
Detailer: S. Fall			
Sheet Subset: Bridge		Subset Sheets: B26 of 55	

Project No./Code
IM 0254-394
16311
Sheet Number 85

sfall 4:23:32 PM G:\Projects\I-25_Santa_Fe\16311\Bridge\Drawings\16311FBE_PH2_24_Closure_Diaph_Dim_Reinf.dgn
9/27/2010 CDOT-PDFHighQuality_XM.pltcfg CDOT-PenTable.tbl

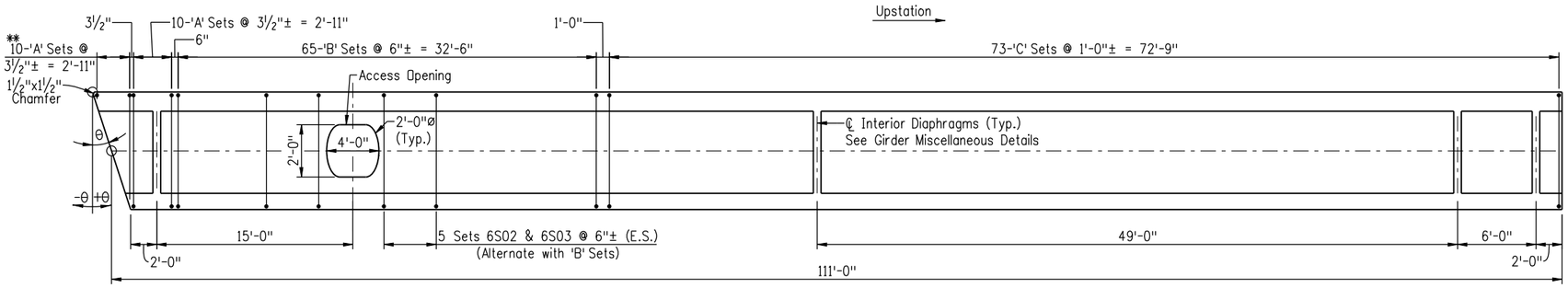

GIRDER PLAN
(Transversely Exaggerated)

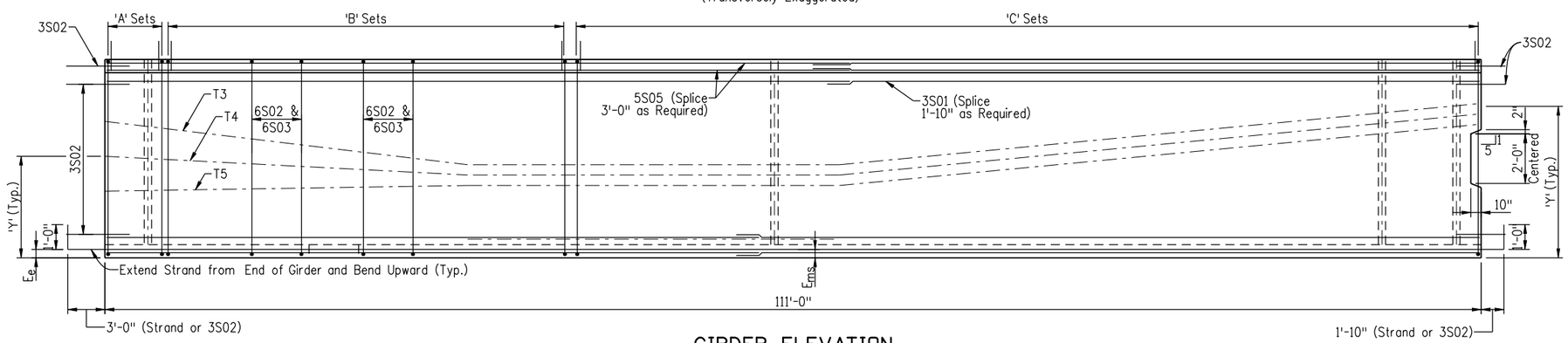

GIRDER ELEVATION
(Vertically Exaggerated)

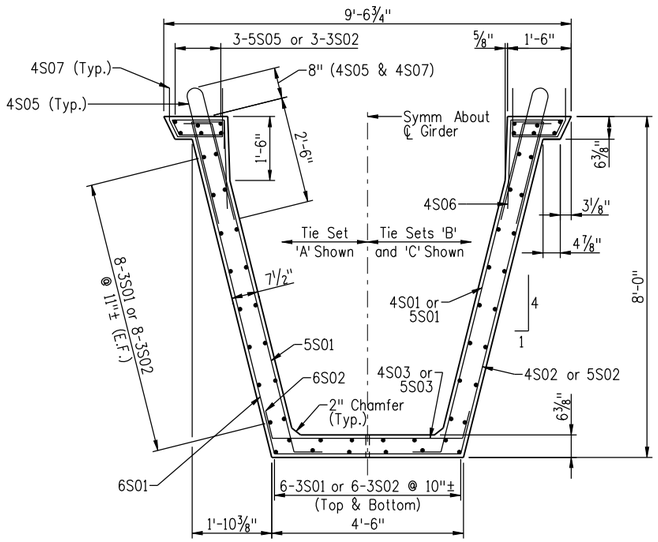

GIRDER SECTION
(Dimensions & Reinforcing)

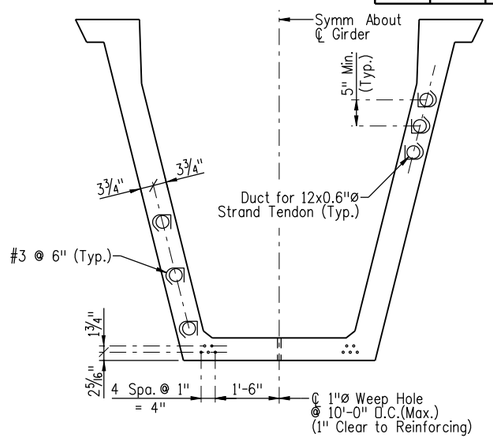

GIRDER SECTION
(Prestressing)

GIRDER SCHEDULE

Girder	A_s	E_{ms}	E_e	f j	f_s	f'ci	f'c	Δ	Predicted Camber	θ	Δ_{ax}
A1-H1	2.17	3.18	3.18	439.4	-	6.5	8.5	-	-	-	-

P.T. DUCT LOCATIONS @ GIRDER ENDS 'Y'

Tendon	Downstation Left	Downstation Right	Upstation
T3	-	-	-
T4	-	-	-
T5	-	-	-

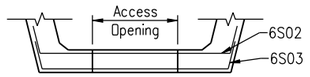

ACCESS OPENING REINFORCING
(Trim 'B' Sets to 1" Clear Around Opening)

NOTES:
All Work Necessary to Fabricate and Install the Integral Parts of the Girder (Including the Intermediate Diaphragms and Leveling Pads), As Shown on the Plans, Shall be Included in the Bid Price for Item No. 618-10200 Precast Concrete U Girder (Precast and Post-Tensioned).

When Approved by the Engineer, a Minimum of Tack Welding will be Permitted on ASTM A706 Uncoated Reinforcing Steel.

Reinforcing Projecting from the Top of the Girder Shall be Epoxy Coated. The Minimum Cover for Reinforcing Steel is 1".

Do Not Make Cosmetic Repairs to the Parts of the Girders Embedded in Concrete.

Use Low Relaxation Strands Meeting the Requirements of ASTM A-416 Grade 270. The Minimum Clear Distance Between Groups or Individual Strands Shall be $2.3(d_s)$ but Not Less than 1¼". The Minimum Cover for Prestressing Steel is 1½".

Definitions:
- A_s* = Minimum Area of the Prestressing Steel.
- d_s = Nominal Strand Diameter.
- f'_s = Ultimate Strength of the Prestressing Steel.
- F = Jacking Force Per Girder.
- F_s = Final Force Per Girder After All Losses.
- f'_{ci} = Required Concrete Strength at Release of Prestress Force.
- f'_c = Required Concrete Strength at 28 Days of Age.
- L = Length of Girder Along the Grade of the Girder.
- θ = End of Girder Skew Angle
- Δ = Deflection at Centerline of Span Due to Cast-In-Place Slab, Diaphragms, Overlay, Curbs, and Rails.
- E_{ms} = Centroid of Pretensioning Force at Mid-Span of Girders.
- E_e = Centroid of Pretensioning Force at End of Girders.
- Δ_{ax} = Estimated Axial Shortening at 90 Days. Contractor Should Consider Axial Shortening in Fabricated Beam Lengths so that Beam Length at Erection is Achieved.

Concrete Shall be Class PS, with Strength as Noted in Table.

Diaphragms Shall be Cast Prior to Transfer.

Entrained Air is Not Required for Girder Concrete.

Use ½" Chamfer on All Corners, Except As Noted.

Predicted Camber is the Camber for the Girder Alone at 90 Days. The Contractor Shall Limit the Camber Growth to a Value Not to Deviate From the Predicted Camber Plus 1" Prior to the Deck Pour by Weighting, Scheduling Fabrication, Post-Tensioning, Changing Storage Support Points or Other Means and Must Report to the Engineer Values of Camber Which Exceed the Predicted Camber Plus 1". Remedial Measures, as Approved by the Engineer, Shall be Taken if the Predicted Camber Plus 1" is Exceeded. The Approved Remedial Measures Shall be Free of any Adverse Impact. The Costs Associated with all Remedial Measures Shall be Borne by the Contractor.

Dimensional Tolerances for Precast U-Girders Shall be those Tolerances specified in MNL-116 as Shown for I Girders with the Following Exceptions: Flange Widths and Widths Between Flanges ±1/16"/Ft Width, ±¼" Minimum. Variation from Specified Plan End Squareness or Skew ±⅛"/Ft Width of Each Flange or Overall Width.

Strand Patterns Shown May be Used or the Contractor May Propose Alternative Patterns that Meet the Requirements Listed in the Table and Provide the Same Number of Bonded Strands at Each Location Along the Girder.

Tie Set 'A' Consists of: 2-4S05, 2-4S07, 2-5S01, 1-6S01, and 1-6S02
Tie Set 'B' Consists of: 2-4S05, 2-4S07, 2-5S01, 2-5S02, 1-5S03, and 1-5S04
Tie Set 'C' Consists of: 2-4S01, 2-4S02, 1-4S03, 1-4S04, 2-4S05, 2-4S06, and 2-4S07

Prestressing Strand that Extends Beyond the End of the Girder Must be Bent Into Final Position Before the Girder Leaves the Precasting Yard.

** Trim 'A' Sets to 1" Clear at Skewed End.

Revision Dates (Preliminary Stage Only)	
	MM/YY

Design			Detail			Quantities		
	INITIAL	DATE		INITIAL	DATE		INITIAL	DATE
Designed By	XXX	MM/YY	Detailed By	XXX	MM/YY	Quantities By	XXX	MM/YY
Checked By	XXX	MM/YY	Checked By	XXX	MM/YY	Checked By	XXX	MM/YY

sfall 4:24:24 PM G:\Projects\I-25_Santa_Fe\16311\Bridge\Drawings\16311FBE_PH2_27_Girder-1-Details.dgn
9/27/2010 CDOT-PDFHighQuality_XM.pltcfg CDOT-PenTable.tbl

Print Date: 9/27/2010	
File Name: 16311FBE_PH2_27_Girder-1-Details.dgn	
Horiz. Scale: 1:1	Vert. Scale: As Noted
Unit Information	Unit Leader Initials

FIGG
1873 S. Bellaire St., Ste 1500
Denver CO, 80222

Sheet Revisions		
Date:	Comments	Init.

Colorado Department of Transportation
2000 South Holly Street
Denver, CO 80222
Phone: 303-972-9112 FAX: 303-972-9114
Region 6 RLB

As Constructed	
No Revisions:	
Revised:	
Void:	

I-25/SANTA FE INTERCHANGE
I-25 OVER SANTA FE
PRECAST U-GIRDER 1 DETAILS

Designer: K. Montgomery		Structure Numbers	F-16-XS
Detailer: S. Fall			
Sheet Subset: Bridge	Subset Sheets: B30 of 55		

Project No./Code	
IM 0254-394	
16311	
Sheet Number	86

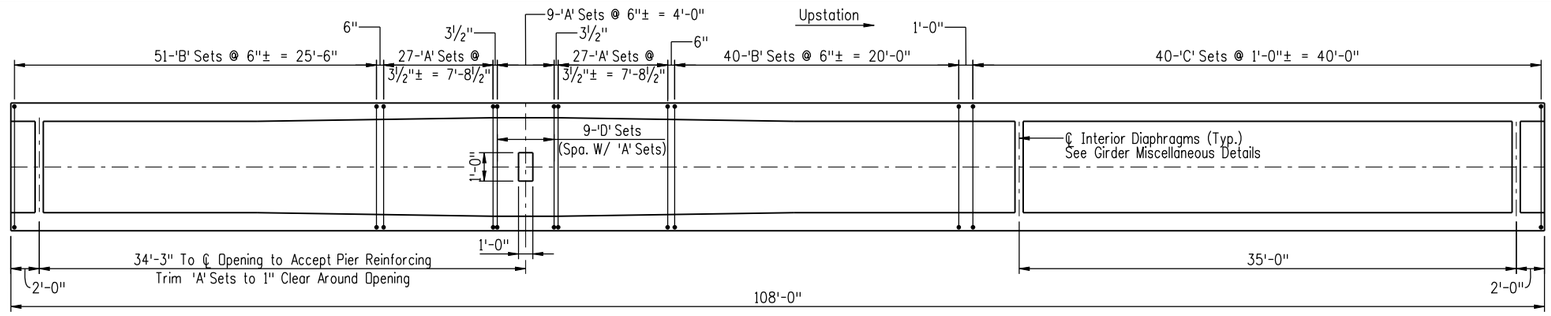

GIRDER PLAN
(Transversely Exaggerated)

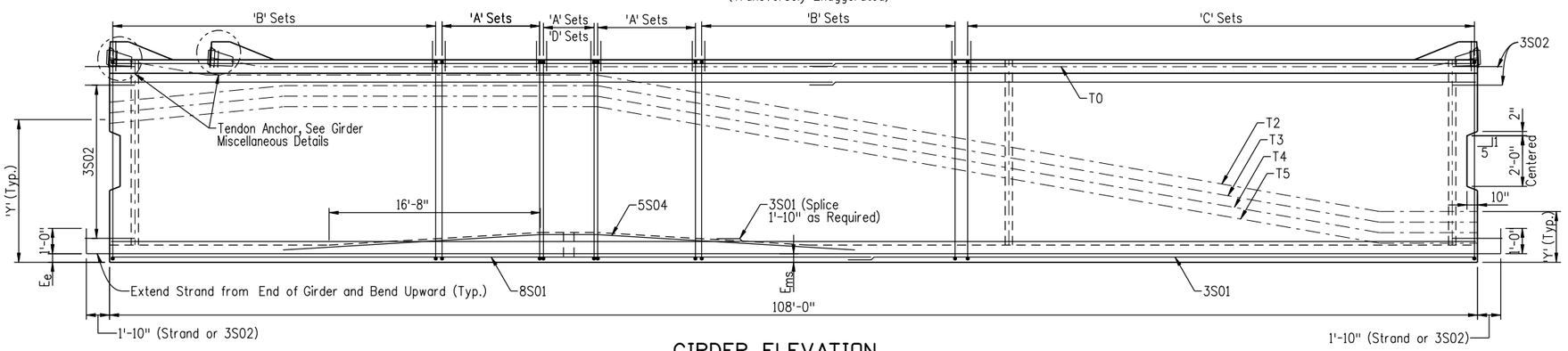

GIRDER ELEVATION
(Vertically Exaggerated)

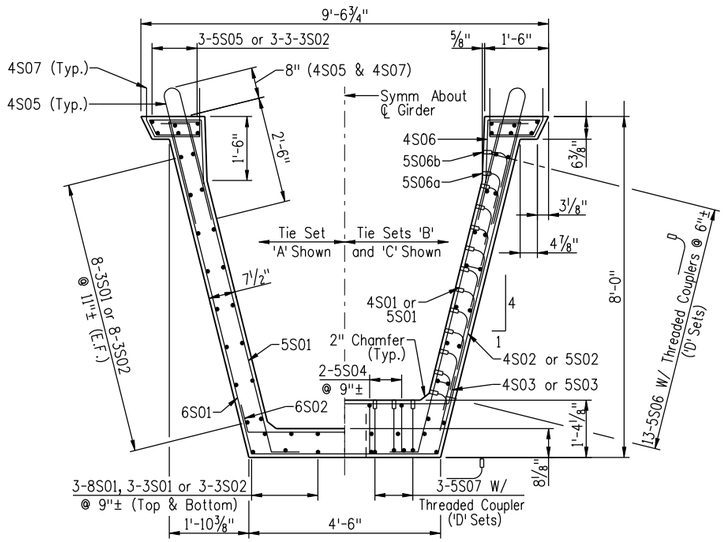

GIRDER SECTION
(Dimensions & Reinforcing)

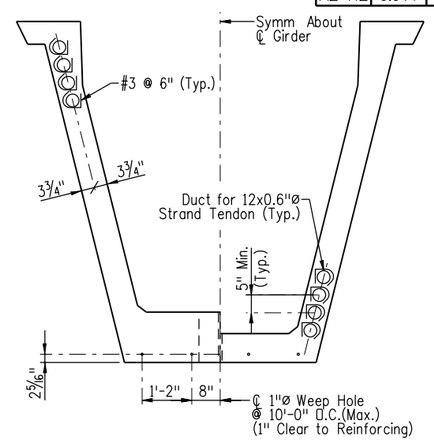

GIRDER SECTION
(Prestressing)

GIRDER SCHEDULE

Girder	A_s	E_{ms}	E_e	f j	f_s	f'ci	f'c	Δ	Predicted Camber	θ	Δ_{ax}
A2-H2	6.944	70.4	70.4	1406.2	-	6.5	9.0	-	-	-	-

P.T. DUCT LOCATIONS @ GIRDER ENDS 'Y'

Tendon	Downstation Left	Downstation Right	Upstation
T0	-	-	-
T2	-	-	-
T3	-	-	-
T4	-	-	-
T5	-	-	-

NOTES:
All Work Necessary to Fabricate and Install the Integral Parts of the Girder (Including the Intermediate Diaphragms and Leveling Pads), As Shown on the Plans, Shall be Included in the Bid Price for Item No. 618-10200 Precast Concrete U Girder (Precast and Post-Tensioned).

When Approved by the Engineer, a Minimum of Tack Welding will be Permitted on ASTM A706 Uncoated Reinforcing Steel.

Reinforcing Projecting from the Top of the Girder Shall be Epoxy Coated. The Minimum Cover for Reinforcing Steel is 1".

Do Not Make Cosmetic Repairs to the Parts of the Girders Embedded in Concrete.

Use Low Relaxation Strands Meeting the Requirements of ASTM A-416 Grade 270. The Minimum Clear Distance Between Groups or Individual Strands Shall be $2.3(d_s)$ but Not Less than 1¼". The Minimum Cover for Prestressing Steel is 1½".

Definitions:
- A_s* = Minimum Area of the Prestressing Steel.
- d_s = Nominal Strand Diameter.
- f'_s = Ultimate Strength of the Prestressing Steel.
- F = Jacking Force Per Girder.
- F_s = Final Force Per Girder After All Losses.
- f'_{ci} = Required Concrete Strength at Release of Prestress Force.
- f'_c = Required Concrete Strength at 28 Days of Age.
- L = Length of Girder Along the Grade of the Girder.
- θ = End of Girder Skew Angle
- Δ = Deflection at Centerline of Span Due to Cast-In-Place Slab, Diaphragms, Overlay, Curbs, and Rails.
- E_{ms} = Centroid of Pretensioning Force at Mid-Span of Girders.
- E_e = Centroid of Pretensioning Force at End of Girders.
- Δ_{ax} = Estimated Axial Shortening at 90 Days. Contractor Should Consider Axial Shortening in Fabricated Beam Lengths so that Beam Length at Erection is Achieved.

Concrete Shall be Class PS, with Strength as Noted in Table.

Diaphragms Shall be Cast Prior to Transfer.

Entrained Air is Not Required for Girder Concrete.

Use ½" Chamfer on All Corners, Except As Noted.

Predicted Camber is the Camber for the Girder Alone at 90 Days. The Contractor Shall Limit the Camber Growth to a Value Not to Deviate From the Predicted Camber Plus 1" Prior to the Deck Pour by Weighting, Scheduling Fabrication, Post-Tensioning, Changing Storage Support Points or Other Means and Must Report to the Engineer Values of Camber Which Exceed the Predicted Camber Plus 1". Remedial Measures, as Approved by the Engineer, Shall be Taken if the Predicted Camber Plus 1" is Exceeded. The Approved Remedial Measures Shall be Free of any Adverse Impact. The Costs Associated with all Remedial Measures Shall be Borne by the Contractor.

Dimensional Tolerances for Precast U-Girders Shall be those Tolerances specified in MNL-116 as Shown for I Girders with the Following Exceptions: Flange Widths and Widths Between Flanges ±1/16"/Ft Width, ±¼" Minimum. Variation from Specified Plan End Squareness or Skew ±⅛"/Ft Width of Each Flange or Overall Width.

Strand Patterns Shown May be Used or the Contractor May Propose Alternative Patterns that Meet the Requirements Listed in the Table and Provide the Same Number of Bonded Strands at Each Location Along the Girder.

Tie Set 'A' Consists of: 2-4S05, 2-4S07, 2-5S01, 1-6S01, & 1-6S02
Tie Set 'B' Consists of: 2-4S05, 2-4S07, 2-5S01, 2-5S02, 1-5S03, & 1-5S04
Tie Set 'C' Consists of: 2-4S01, 2-4S02, 1-4S03, 1-4S04, 2-4S05, 2-4S06, & 2-4S07
Set 'D' Consists of: 22-5S06, 2-5S06a, 2-5S06b & 6-5S07

Prestressing Strand that Extends Beyond the End of the Girder Must be Bent Into Final Position Before the Girder Leaves the Precasting Yard.

Revision Dates	(Preliminary Stage Only)
MM/YY	

Design	INITIAL	DATE
Designed By	XXX	MM/YY
Checked By	XXX	MM/YY

Detail	INITIAL	DATE
Detailed By	XXX	MM/YY
Checked By	XXX	MM/YY

Quantities	INITIAL	DATE
Quantities By	XXX	MM/YY
Checked By	XXX	MM/YY

Print Date: 9/27/2010			
File Name: 16311FBE_PH2_28_Girder-2-Details.dgn			
Horiz. Scale: 1:1	Vert. Scale: As Noted		
Unit Information	Unit Leader Initials		
FIGG 1873 S. Bellaire St., Ste 1500 Denver CO, 80222			

Sheet Revisions		
Date:	Comments	Init.

Colorado Department of Transportation
2000 South Holly Street
Denver, CO 80222
Phone: 303-972-9112 FAX: 303-972-9114
Region 6 RLB

As Constructed	
No Revisions:	
Revised:	
Void:	

I-25/SANTA FE INTERCHANGE
I-25 OVER SANTA FE
PRECAST U-GIRDER 2 DETAILS

Designer: K. Montgomery		Structure Numbers	F-16-XS
Detailer: S. Fall			
Sheet Subset: Bridge	Subset Sheets: B31 of 55		

Project No./Code	
IM 0254-394	
16311	
Sheet Number	87

sfall 4:25:17 PM G:\Projects\I-25_Santa_Fe\16311\Bridge\Drawings\16311FBE_PH2_28_Girder-2-Details.dgn
9/27/2010 CDOT-PDFHighQuality_XM.pltcfg CDOT-PenTable.tbl

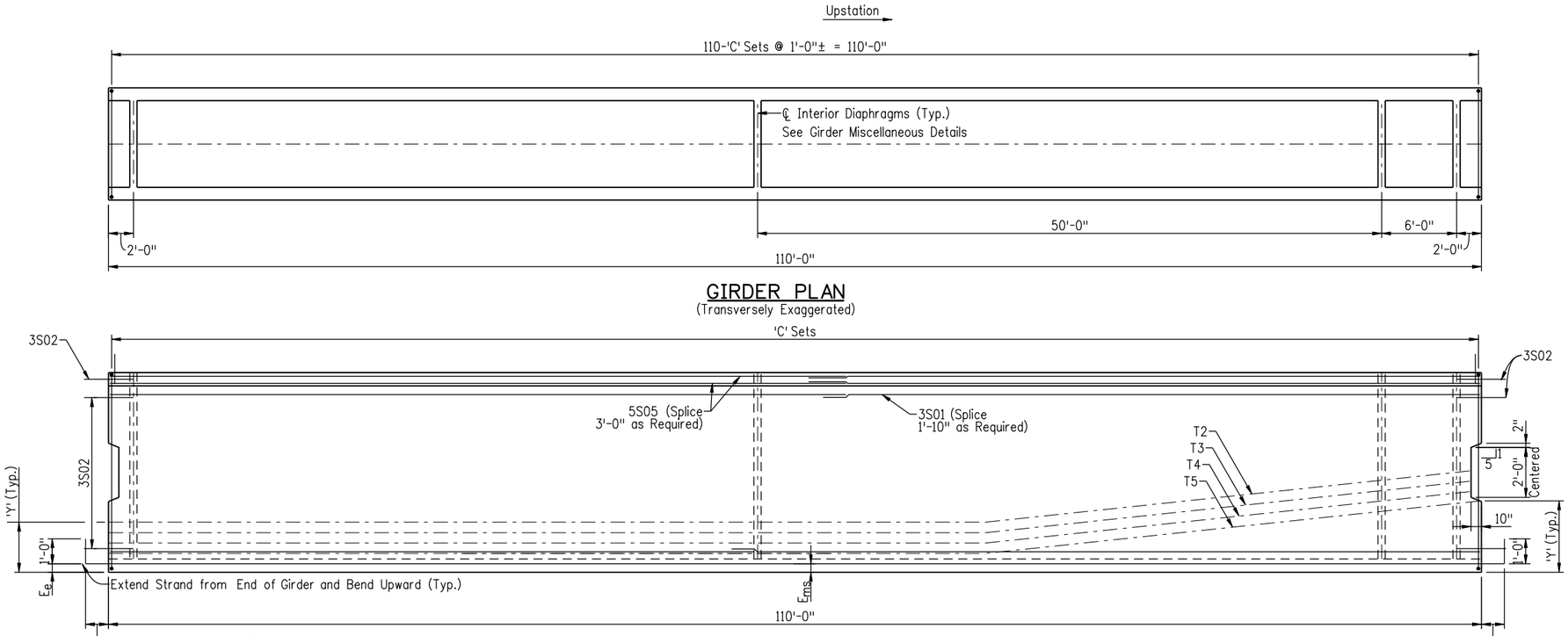

GIRDER PLAN
(Transversely Exaggerated)

GIRDER ELEVATION
(Vertically Exaggerated)

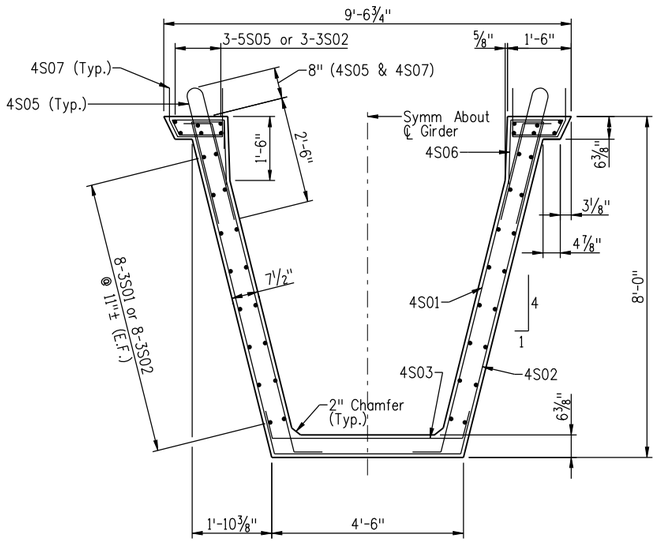

GIRDER SECTION
(Dimensions & Reinforcing)

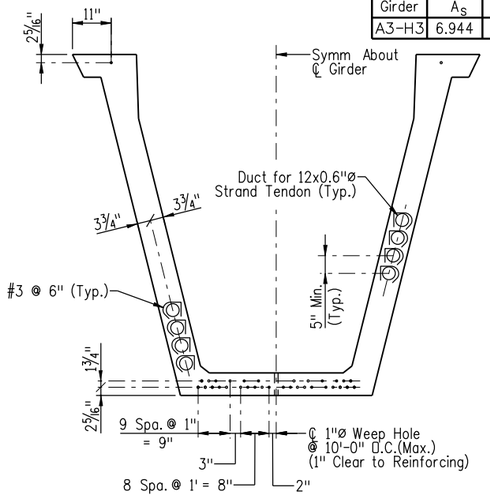

GIRDER SECTION
(Prestressing)

GIRDER SCHEDULE

Girder	A_s	E_{ms}	E_e	f_j	f_s	f'_{ci}	f'_c	Δ	Predicted Camber	θ	Δ_{ax}
A3-H3	6.944	8.78	8.78	1406.2	-	6.5	8.5	-	-	-	-

P.T. DUCT LOCATIONS @ GIRDER ENDS 'Y'

Tendon	Downstation Left	Downstation Right	Upstation
T2	-	-	-
T3	-	-	-
T4	-	-	-
T5	-	-	-

NOTES:
All Work Necessary to Fabricate and Install the Integral Parts of the Girder (Including the Intermediate Diaphragms and Leveling Pads), As Shown on the Plans, Shall be Included in the Bid Price for Item No. 618-10200 Precast Concrete U Girder (Precast and Post-Tensioned).

When Approved by the Engineer, a Minimum of Tack Welding will be Permitted on ASTM A706 Uncoated Reinforcing Steel.

Reinforcing Projecting from the Top of the Girder Shall be Epoxy Coated. The Minimum Cover for Reinforcing Steel is 1".

Do Not Make Cosmetic Repairs to the Parts of the Girders Embedded in Concrete.

Use Low Relaxation Strands Meeting the Requirements of ASTM A-416 Grade 270. The Minimum Clear Distance Between Groups or Individual Strands Shall be $2.3(d_s)$ but Not Less than 1¼". The Minimum Cover for Prestressing Steel is 1½".

Definitions:
- A_s* = Minimum Area of the Prestressing Steel.
- d_s = Nominal Strand Diameter.
- f'_s = Ultimate Strength of the Prestressing Steel.
- F = Jacking Force Per Girder.
- F_s = Final Force Per Girder After All Losses.
- f'_{ci} = Required Concrete Strength at Release of Prestress Force.
- f'_c = Required Concrete Strength at 28 Days of Age.
- L = Length of Girder Along the Grade of the Girder.
- θ = End of Girder Skew Angle
- Δ = Deflection at Centerline of Span Due to Cast-In-Place Slab, Diaphragms, Overlay, Curbs, and Rails.
- E_{ms} = Centroid of Pretensioning Force at Mid-Span of Girders.
- E_e = Centroid of Pretensioning Force at End of Girders.
- Δ_{ax} = Estimated Axial Shortening at 90 Days. Contractor Should Consider Axial Shortening in Fabricated Beam Lengths so that Beam Length at Erection is Achieved.

Concrete Shall be Class PS, with Strength as Noted in Table.

Diaphragms Shall be Cast Prior to Transfer.

Entrained Air is Not Required for Girder Concrete.

Use ½" Chamfer on All Corners, Except As Noted.

Predicted Camber is the Camber for the Girder Alone at 90 Days. The Contractor Shall Limit the Camber Growth to a Value Not to Deviate From the Predicted Camber Plus 1" Prior to the Deck Pour by Weighting, Scheduling Fabrication, Post-Tensioning, Changing Storage Support Points or Other Means and Must Report to the Engineer Values of Camber Which Exceed the Predicted Camber Plus 1". Remedial Measures, as Approved by the Engineer, Shall be Taken if the Predicted Camber Plus 1" is Exceeded. The Approved Remedial Measures Shall be Free of any Adverse Impact. The Costs Associated with all Remedial Measures Shall be Borne by the Contractor.

Dimensional Tolerances for Precast U-Girders Shall be those Tolerances specified in MNL-116 as Shown for I Girders with the Following Exceptions: Flange Widths and Widths Between Flanges ±1/16"/Ft Width, ±¼" Minimum. Variation from Specified Plan End Squareness or Skew ±⅛"/Ft Width of Each Flange or Overall Width.

Strand Patterns Shown May be Used or the Contractor May Propose Alternative Patterns that Meet the Requirements Listed in the Table and Provide the Same Number of Bonded Strands at Each Location Along the Girder.

Tie Set 'A' Consists of: 2-4S05, 2-4S07, 2-5S01, 1-6S01, and 1-6S02
Tie Set 'B' Consists of: 2-4S05, 2-4S07, 2-5S01, 2-5S02, 1-5S03, and 1-5S04
Tie Set 'C' Consists of: 2-4S01, 2-4S02, 1-4S03, 1-4S04, 2-4S05, 2-4S06, and 2-4S07

Prestressing Strand that Extends Beyond the End of the Girder Must be Bent Into Final Position Before the Girder Leaves the Precasting Yard.

Revision Dates (Preliminary Stage Only)	
MM/YY	

Design	INITIAL	DATE
Designed By	XXX	MM/YY
Checked By	XXX	MM/YY

Detail	INITIAL	DATE
Detailed By	XXX	MM/YY
Checked By	XXX	MM/YY

Quantities	INITIAL	DATE
Quantities By	XXX	MM/YY
Checked By	XXX	MM/YY

Print Date: 9/27/2010	
File Name: 16311FBE_PH2_29_Girder-3-Details.dgn	
Horiz. Scale: 1:1	Vert. Scale: As Noted
Unit Information	Unit Leader Initials

FIGG
1873 S. Bellaire St., Ste 1500
Denver CO, 80222

Sheet Revisions

Date:	Comments	Init.

Colorado Department of Transportation
2000 South Holly Street
Denver, CO 80222
Phone: 303-972-9112 FAX: 303-972-9114
Region 6 RLB

As Constructed
No Revisions:
Revised:
Void:

I-25/SANTA FE INTERCHANGE
I-25 OVER SANTA FE
PRECAST U-GIRDER 3 DETAILS

Designer: K. Montgomery
Detailer: S. Fall
Sheet Subset: Bridge
Structure Numbers: F-16-XS
Subset Sheets: B32 of 55

Project No./Code
IM 0254-394
16311
Sheet Number 88

sfall 4:26:50 PM G:\Projects\I-25_Santa_Fe\16311\Bridge\Drawings\16311FBE_PH2_29_Girder-3-Details.dgn
9/27/2010 CDOT-PDFHighQuality_XM.pltcfg CDOT-PenTable.tbl

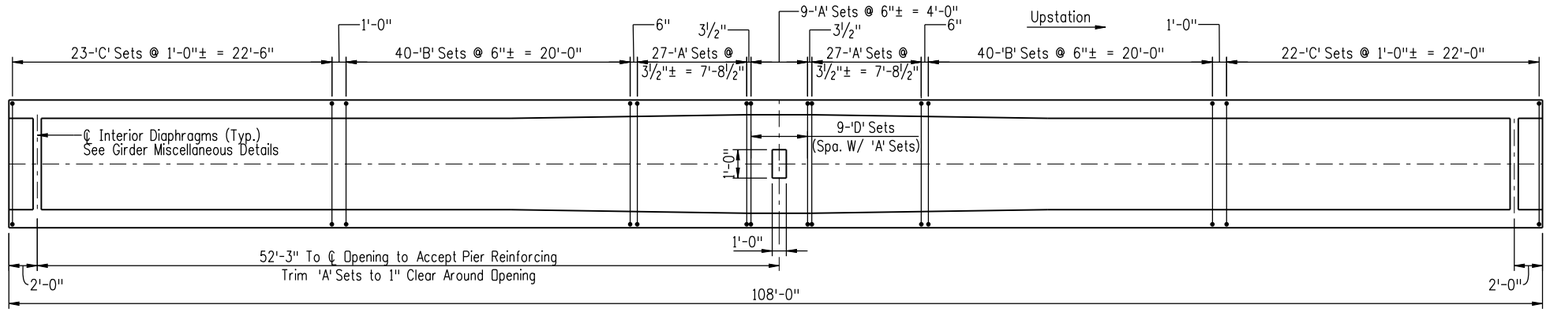

GIRDER PLAN
(Transversely Exaggerated)

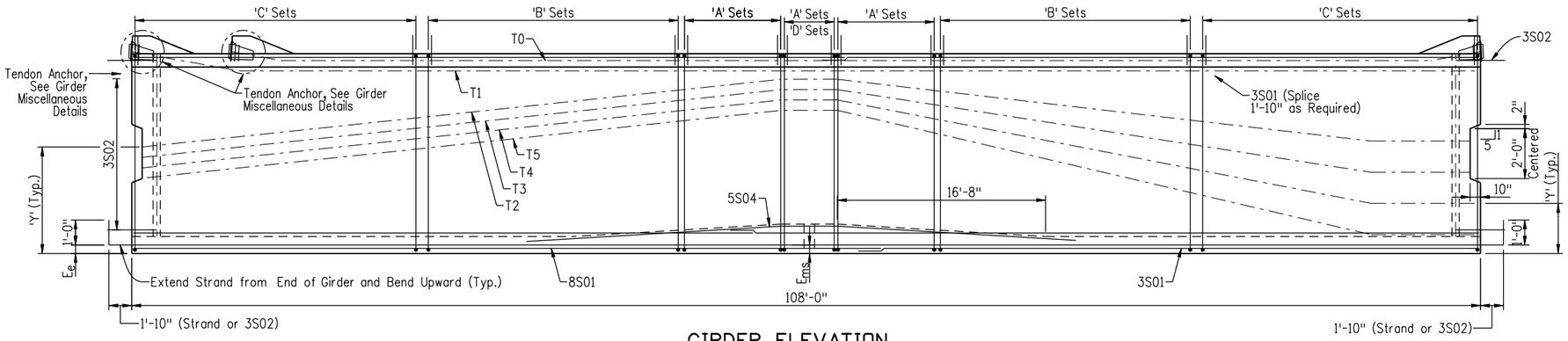

GIRDER ELEVATION
(Vertically Exaggerated)

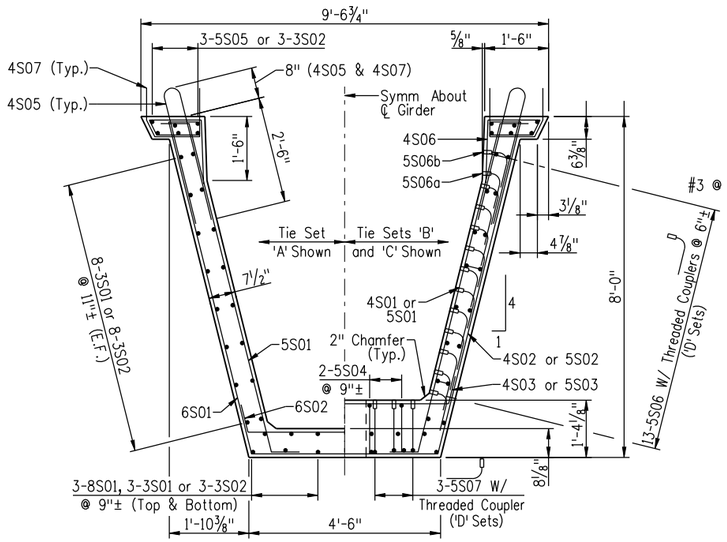

GIRDER SECTION
(Dimensions & Reinforcing)

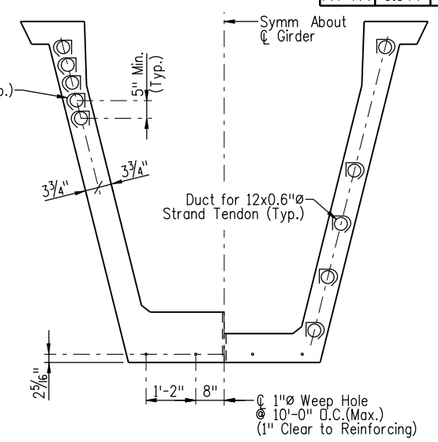

GIRDER SECTION
(Prestressing)

GIRDER SCHEDULE

Girder	A_s	E_{ms}	E_e	f j	f_s	f'ci	f'c	Δ	Predicted Camber	θ	Δ_{ax}
A4-H4	6.944	70.4	70.4	1406.2	-	6.5	9.0	-	-	-	-

P.T. DUCT LOCATIONS @ GIRDER ENDS 'Y'

Tendon	Downstation Left	Downstation Right	Upstation
T0	-	-	-
T1	-	-	-
T2	-	-	-
T3	-	-	-
T4	-	-	-
T5	-	-	-

NOTES:
All Work Necessary to Fabricate and Install the Integral Parts of the Girder (Including the Intermediate Diaphragms and Leveling Pads), As Shown on the Plans, Shall be Included in the Bid Price for Item No. 618-10200 Precast Concrete U Girder (Precast and Post-Tensioned).

When Approved by the Engineer, a Minimum of Tack Welding will be Permitted on ASTM A706 Uncoated Reinforcing Steel.

Reinforcing Projecting from the Top of the Girder Shall be Epoxy Coated. The Minimum Cover for Reinforcing Steel is 1".

Do Not Make Cosmetic Repairs to the Parts of the Girders Embedded in Concrete.

Use Low Relaxation Strands Meeting the Requirements of ASTM A-416 Grade 270. The Minimum Clear Distance Between Groups or Individual Strands Shall be $2.3(d_s)$ but Not Less than 1¼". The Minimum Cover for Prestressing Steel is 1½".

Definitions:
- A_s* = Minimum Area of the Prestressing Steel.
- d_s = Nominal Strand Diameter.
- f'_s = Ultimate Strength of the Prestressing Steel.
- F = Jacking Force Per Girder.
- F_s = Final Force Per Girder After All Losses.
- f'_{ci} = Required Concrete Strength at Release of Prestress Force.
- f'_c = Required Concrete Strength at 28 Days of Age.
- L = Length of Girder Along the Grade of the Girder.
- θ = End of Girder Skew Angle
- Δ = Deflection at Centerline of Span Due to Cast-In-Place Slab, Diaphragms, Overlay, Curbs, and Rails.
- E_{ms} = Centroid of Pretensioning Force at Mid-Span of Girders.
- E_e = Centroid of Pretensioning Force at End of Girders.
- Δ_{ax} = Estimated Axial Shortening at 90 Days. Contractor Should Consider Axial Shortening in Fabricated Beam Lengths so that Beam Length at Erection is Achieved.

Concrete Shall be Class PS, with Strength as Noted in Table.

Diaphragms Shall be Cast Prior to Transfer.

Entrained Air is Not Required for Girder Concrete.

Use ½" Chamfer on All Corners, Except As Noted.

Predicted Camber is the Camber for the Girder Alone at 90 Days. The Contractor Shall Limit the Camber Growth to a Value Not to Deviate From the Predicted Camber Plus 1" Prior to the Deck Pour by Weighting, Scheduling Fabrication, Post-Tensioning, Changing Storage Support Points or Other Means and Must Report to the Engineer Values of Camber Which Exceed the Predicted Camber Plus 1". Remedial Measures, as Approved by the Engineer, Shall be Taken if the Predicted Camber Plus 1" is Exceeded. The Approved Remedial Measures Shall be Free of any Adverse Impact. The Costs Associated with all Remedial Measures Shall be Borne by the Contractor.

Dimensional Tolerances for Precast U-Girders Shall be those Tolerances specified in MNL-116 as Shown for I Girders with the Following Exceptions: Flange Widths and Widths Between Flanges ±1/16"/Ft Width, ±¼" Minimum. Variation from Specified Plan End Squareness or Skew ±⅛"/Ft Width of Each Flange or Overall Width.

Strand Patterns Shown May be Used or the Contractor May Propose Alternative Patterns that Meet the Requirements Listed in the Table and Provide the Same Number of Bonded Strands at Each Location Along the Girder.

Tie Set 'A' Consists of: 2-4S05, 2-4S07, 2-5S01, 1-6S01, & 1-6S02
Tie Set 'B' Consists of: 2-4S05, 2-4S07, 2-5S01, 2-5S02, 1-5S03, & 1-5S04
Tie Set 'C' Consists of: 2-4S01, 2-4S02, 1-4S03, 1-4S04, 2-4S05, 2-4S06, & 2-4S07
Set 'D' Consists of: 22-5S06, 2-5S06a, 2-5S06b & 6-5S07

Prestressing Strand that Extends Beyond the End of the Girder Must be Bent Into Final Position Before the Girder Leaves the Precasting Yard.

Revision Dates (Preliminary Stage Only)	MM/YY

Design	INITIAL	DATE
Designed By	XXX	MM/YY
Checked By	XXX	MM/YY

Detail	INITIAL	DATE
Detailed By	XXX	MM/YY
Checked By	XXX	MM/YY

Quantities	INITIAL	DATE
Quantities By	XXX	MM/YY
Checked By	XXX	MM/YY

Print Date: 9/27/2010			
File Name: 16311FBE_PH2_30_Girder-4-Details.dgn			
Horiz. Scale: 1:1	Vert. Scale: As Noted		
Unit Information	Unit Leader Initials		
FIGG 1873 S. Bellaire St., Ste 1500 Denver CO, 80222			

Sheet Revisions		
Date:	Comments	Init.

Colorado Department of Transportation
2000 South Holly Street
Denver, CO 80222
Phone: 303-972-9112 FAX: 303-972-9114
Region 6 RLB

As Constructed	
No Revisions:	
Revised:	
Void:	

I-25/SANTA FE INTERCHANGE
I-25 OVER SANTA FE
PRECAST U-GIRDER 4 DETAILS

Designer: K. Montgomery		Structure Numbers	F-16-XS
Detailer: S. Fall			
Sheet Subset: Bridge	Subset Sheets: B33 of 55		

Project No./Code	
IM 0254-394	
16311	
Sheet Number	89

sfall 5:14:46 PM G:\Projects\I-25_Santa_Fe\16311\Bridge\Drawings\16311FBE_PH2_30_Girder-4-Details.dgn
9/27/2010 CDOT-PDFHighQuality_XM.pltcfg CDOT-PenTable.tbl

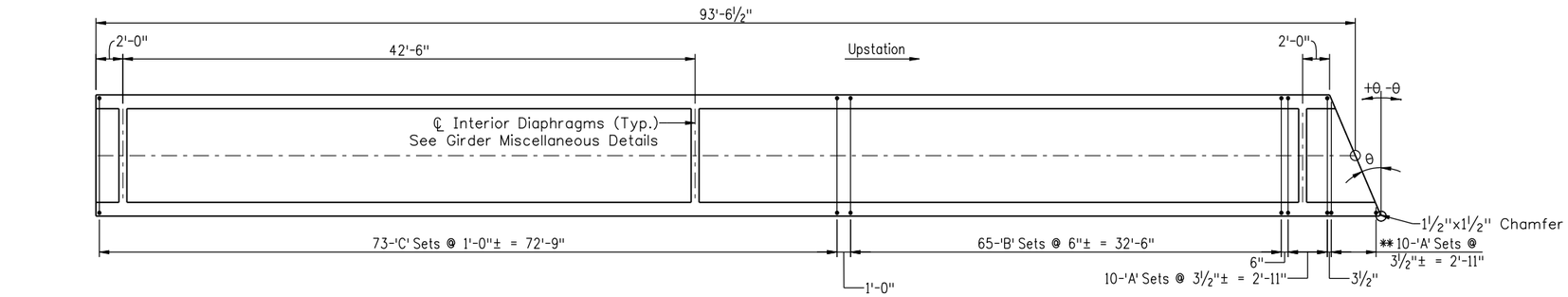

GIRDER PLAN
(Transversely Exaggerated)

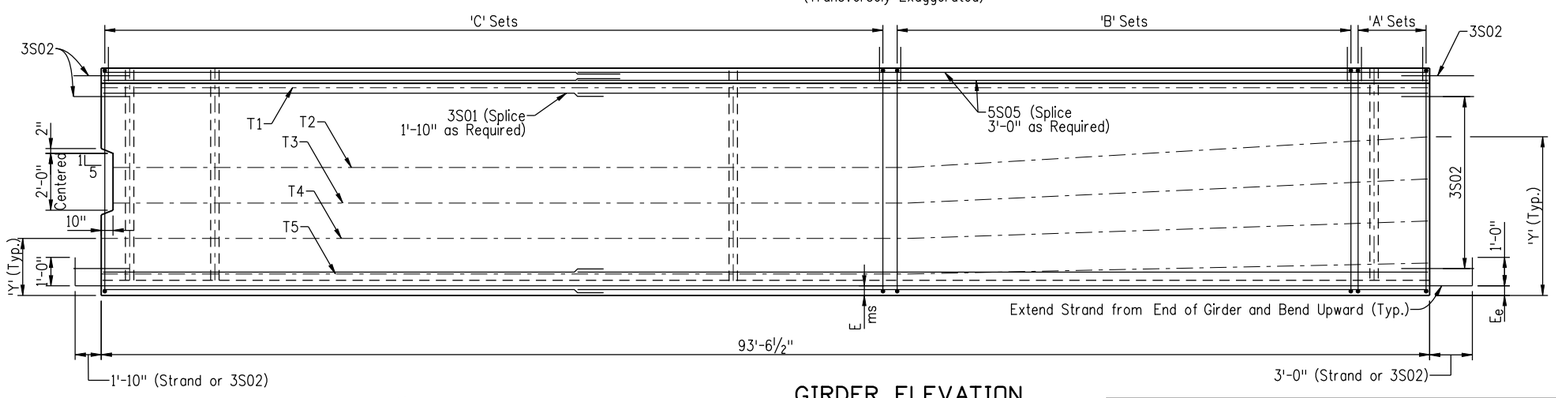

GIRDER ELEVATION
(Vertically Exaggerated)

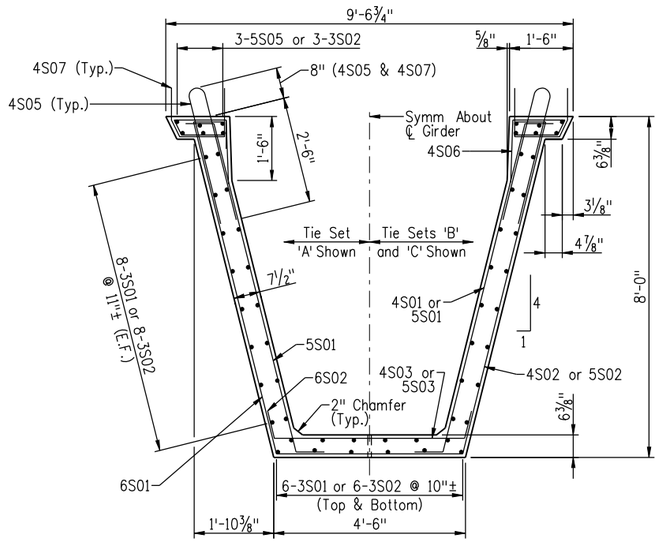

GIRDER SECTION
(Dimensions & Reinforcing)

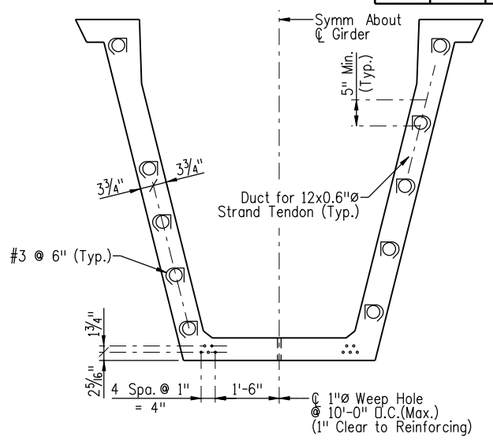

GIRDER SECTION
(Prestressing)

GIRDER SCHEDULE

Girder	A_s	E_{ms}	E_e	f_j	f_s	f'_{ci}	f'_c	Δ	Predicted Camber	θ	Δ_{ax}
A1-H1	2.17	3.18	3.18	439.4	-	6.5	8.5	-	-	-	-

P.T. DUCT LOCATIONS @ GIRDER ENDS 'Y'

Tendon	Down-station	Upstation Right	Upstation Left
T1	-	-	-
T2	-	-	-
T3	-	-	-
T4	-	-	-
T5	-	-	-

NOTES:
All Work Necessary to Fabricate and Install the Integral Parts of the Girder (Including the Intermediate Diaphragms and Leveling Pads), As Shown on the Plans, Shall be Included in the Bid Price for Item No. 618-10200 Precast Concrete U Girder (Precast and Post-Tensioned).

When Approved by the Engineer, a Minimum of Tack Welding will be Permitted on ASTM A706 Uncoated Reinforcing Steel.

Reinforcing Projecting from the Top of the Girder Shall be Epoxy Coated. The Minimum Cover for Reinforcing Steel is 1".

Do Not Make Cosmetic Repairs to the Parts of the Girders Embedded in Concrete.

Use Low Relaxation Strands Meeting the Requirements of ASTM A-416 Grade 270. The Minimum Clear Distance Between Groups or Individual Strands Shall be $2.3(d_s)$ but Not Less than 1¼". The Minimum Cover for Prestressing Steel is 1½".

Definitions:
A_s* = Minimum Area of the Prestressing Steel.
d_s = Nominal Strand Diameter.
f'_s = Ultimate Strength of the Prestressing Steel.
F = Jacking Force Per Girder.
F_s = Final Force Per Girder After All Losses.
f'_{ci} = Required Concrete Strength at Release of Prestress Force.
f'_c = Required Concrete Strength at 28 Days of Age.
L = Length of Girder Along the Grade of the Girder.
θ = End of Girder Skew Angle
Δ = Deflection at Centerline of Span Due to Cast-In-Place Slab, Diaphragms, Overlay, Curbs, and Rails.
E_{ms} = Centroid of Pretensioning Force at Mid-Span of Girders.
E_e = Centroid of Pretensioning Force at End of Girders.
Δ_{ax} = Estimated Axial Shortening at 90 Days. Contractor Should Consider Axial Shortening in Fabricated Beam Lengths so that Beam Length at Erection is Achieved.

Concrete Shall be Class PS, with Strength as Noted in Table.

Diaphragms Shall be Cast Prior to Transfer.

Entrained Air is Not Required for Girder Concrete.

Use ½" Chamfer on All Corners, Except As Noted.

Predicted Camber is the Camber for the Girder Alone at 90 Days. The Contractor Shall Limit the Camber Growth to a Value Not to Deviate From the Predicted Camber Plus 1" Prior to the Deck Pour by Weighting, Scheduling Fabrication, Post-Tensioning, Changing Storage Support Points or Other Means and Must Report to the Engineer Values of Camber Which Exceed the Predicted Camber Plus 1". Remedial Measures, as Approved by the Engineer, Shall be Taken if the Predicted Camber Plus 1" is Exceeded. The Approved Remedial Measures Shall be Free of any Adverse Impact. The Costs Associated with all Remedial Measures Shall be Borne by the Contractor.

Dimensional Tolerances for Precast U-Girders Shall be those Tolerances specified in MNL-116 as Shown for I Girders with the Following Exceptions: Flange Widths and Widths Between Flanges ±1/16"/Ft Width, ±¼" Minimum. Variation from Specified Plan End Squareness or Skew ±⅛"/Ft Width of Each Flange or Overall Width.

Strand Patterns Shown May be Used or the Contractor May Propose Alternative Patterns that Meet the Requirements Listed in the Table and Provide the Same Number of Bonded Strands at Each Location Along the Girder.

Tie Set 'A' Consists of: 2-4S05, 2-4S07, 2-5S01, 1-6S01, and 1-6S02
Tie Set 'B' Consists of: 2-4S05, 2-4S07, 2-5S01, 2-5S02, 1-5S03, and 1-5S04
Tie Set 'C' Consists of: 2-4S01, 2-4S02, 1-4S03, 1-4S04, 2-4S05, 2-4S06, and 2-4S07

Prestressing Strand that Extends Beyond the End of the Girder Must be Bent Into Final Position Before the Girder Leaves the Precasting Yard.

** Trim 'A' Sets to 1" Clear at Skewed End.

Revision Dates (Preliminary Stage Only)

	MM/YY
	MM/YY
	MM/YY
	MM/YY
	MM/YY
	MM/YY

Design	INITIAL	DATE	Detail	INITIAL	DATE	Quantities	INITIAL	DATE
Designed By	XXX	MM/YY	Detailed By	XXX	MM/YY	Quantities By	XXX	MM/YY
Checked By	XXX	MM/YY	Checked By	XXX	MM/YY	Checked By	XXX	MM/YY

Print Date: 9/27/2010	
File Name: 16311FBE_PH2_31_Girder-5-Details.dgn	
Horiz. Scale: 1:1	Vert. Scale: As Noted
Unit Information	Unit Leader Initials

FIGG
1873 S. Bellaire St., Ste 1500
Denver CO, 80222

Sheet Revisions

Date:	Comments	Init.

Colorado Department of Transportation
2000 South Holly Street
Denver, CO 80222
Phone: 303-972-9112 FAX: 303-972-9114
Region 6 RLB

As Constructed
No Revisions:
Revised:
Void:

I-25/SANTA FE INTERCHANGE
I-25 OVER SANTA FE
PRECAST U-GIRDER 5 DETAILS

Designer: K. Montgomery		Structure Numbers	F-16-XS
Detailer: S. Fall			
Sheet Subset: Bridge		Subset Sheets: B31 of 55	

Project No./Code
IM 0254-394
16311
Sheet Number 90

sfall 4:27:57 PM G:\Projects\I-25_Santa_Fe\16311\Bridge\Drawings\16311FBE_PH2_31_Girder-5-Details.dgn
9/27/2010 CDOT-PDFHighQuality_XM.pltcfg CDOT-PenTable.tbl

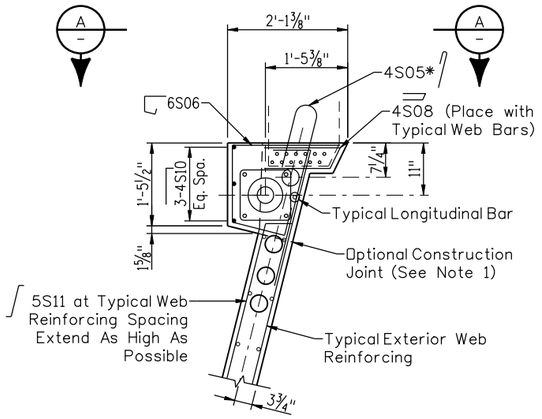

END VIEW

(Girder W/ Anchor Block)

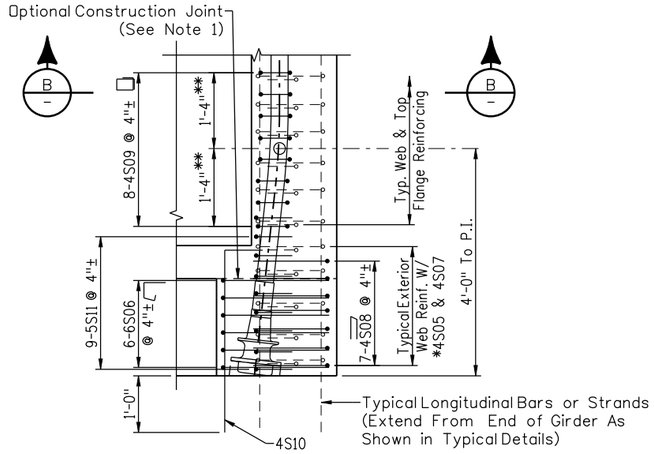

VIEW A

(End Diaphragm Reinforcing, Not Shown for Clarity)

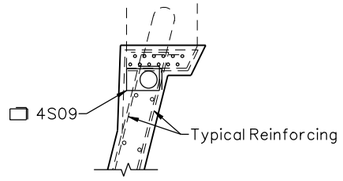

SECTION B

NOTES:

1. Anchor Block May be Cast with Girder or As a Secondary Pour. If a Secondary Pour is Utilized, Reinforcing Shall Cross Construction Joint as Shown.

*2. Trim Inside Leg of 4S05 Bar to Avoid Anchorage and Duct.

**3. Limit Duct Bend to This Length.

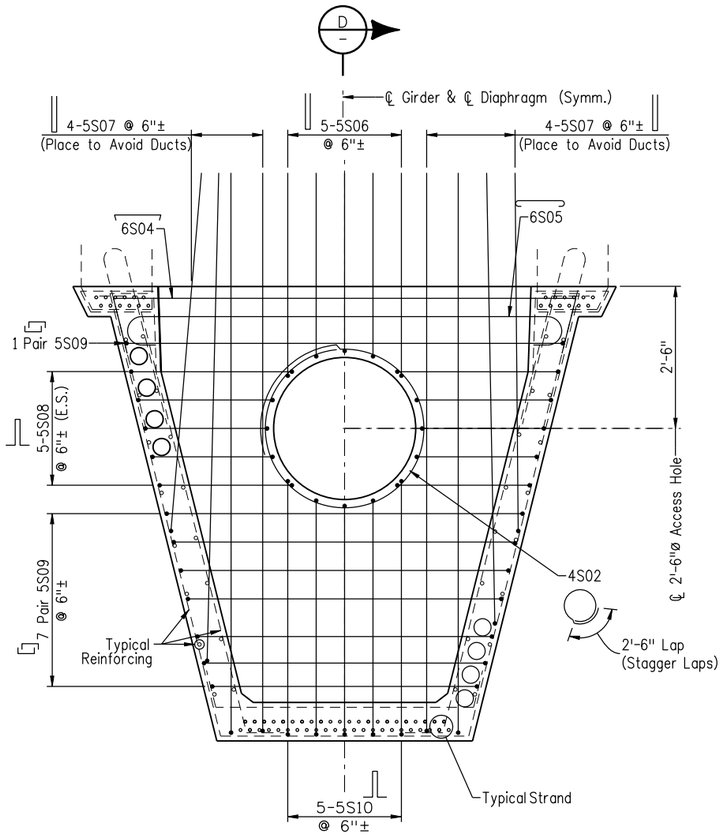

SECTION C

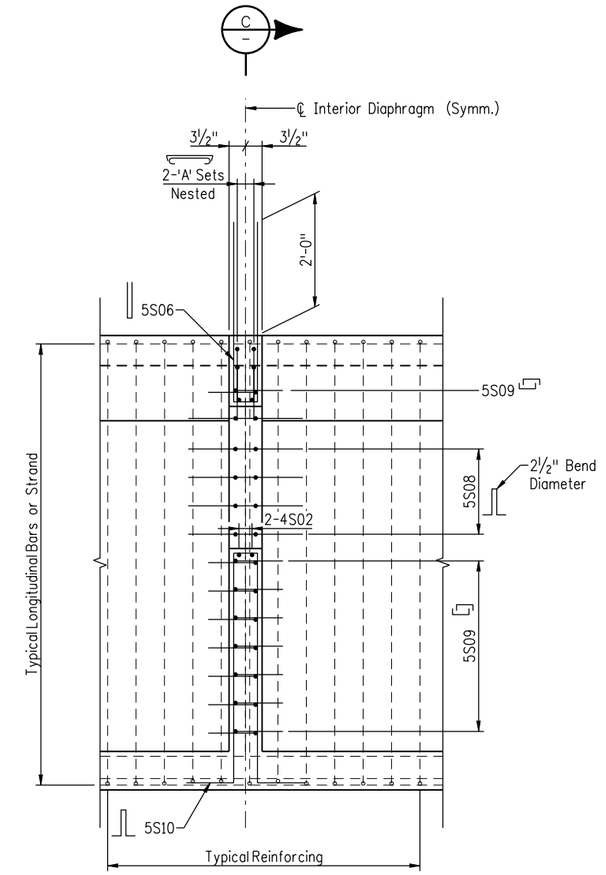

SECTION D

NOTES:

1. Concrete is Class S50, f'c = 7250 PSI.
2. Reinforcing Projecting from Diaphragm Into Deck Shall be Epoxy Coated.
3. Concrete Cover Shall be 1" Minimum.
4. 1-'A' Set Consists of: 1-6S04 & 1-6S05.

Design			Detail			Quantities		
	INITIAL	DATE		INITIAL	DATE		INITIAL	DATE
Designed By	XXX	MM/YY	Detailed By	XXX	MM/YY	Quantities By	XXX	MM/YY
Checked By	XXX	MM/YY	Checked By	XXX	MM/YY	Checked By	XXX	MM/YY

Revision Dates (Preliminary Stage Only): MM/YY

Print Date: 9/27/2010
File Name: 16311FBE_PH2_32_Girder_Misc_Details.dgn
Horiz. Scale: 1:32 Vert. Scale: As Noted
Unit Information Unit Leader Initials

FIGG
1873 S. Bellaire St., Ste 1500
Denver CO, 80222

Sheet Revisions		
Date:	Comments	Init.

Colorado Department of Transportation
2000 South Holly Street
Denver, CO 80222
Phone: 303-972-9112 FAX: 303-972-9114
Region 6 RLB

As Constructed
No Revisions:
Revised:
Void:

I-25/SANTA FE INTERCHANGE
I-25 OVER SANTA FE
GIRDER MISCELLANEOUS DETAILS

Designer: K. Montgomery
Detailer: S. Fall
Sheet Subset: Bridge
Structure Numbers: F-16-XS
Subset Sheets: B26 of 55

Project No./Code
IM 0254-394
16311
Sheet Number 91

sfall 4:28:45 PM 9/27/2010
G:\Projects\I-25_Santa_Fe\16311\Bridge\Drawings\16311FBE_PH2_32_Girder_Misc_Details.dgn
CDOT-PDFHighQuality_XM.pltcfg CDOT-PenTable.tbl

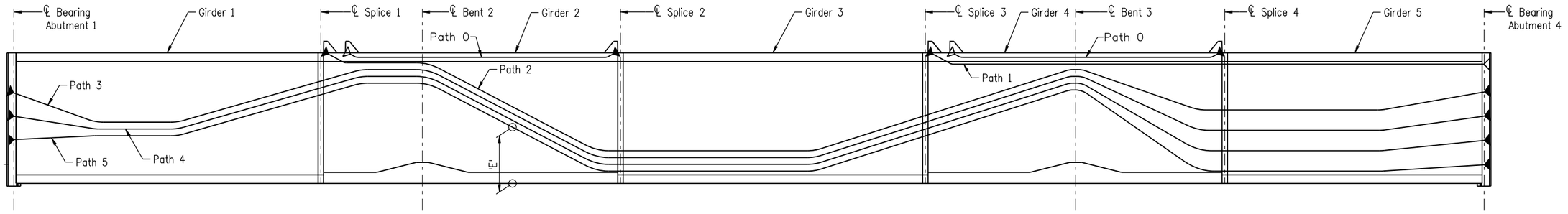

ELEVATION

Point	1.0	1.1	1.2	1.3	1.4	1.5	1.6	1.7	S.1	1.8	1.9	2.0	2.1	2.2	2.3	S.2	2.4	2.5	2.6	2.7	S. 3	2.8	2.9	3.0	3.1	3.2	3.3	S. 4	3.4	3.5	3.6	3.7	3.8	3.9	4.0
'E' Path 0 (in)	–	–	–	–	–	–	–	–	–	–	92.69	92.69	92.69	92.69	–	–	–	–	–	–	–	–	92.69	92.69	92.69	92.69	92.69	–	–	–	–	–	–	–	–	–
'E' Path 1 (in)	–	–	–	–	–	–	–	–	–	–	–	–	–	–	–	–	–	–	–	–	–	90.26	87.69	87.69	87.69	87.69	87.69	87.69	87.69	87.69	87.69	87.69	87.69	87.69	87.69
'E' Path 2 (in)	–	–	–	–	–	–	–	–	–	90.26	88.75	88.49	65.95	40.80	24.03	24.03	24.03	24.03	24.45	39.32	49.99	54.61	69.90	83.75	74.89	66.46	54.53	54.03	54.03	54.03	54.03	54.03	56.68	61.99	67.29
'E' Path 3 (in)	66.56	55.80	45.56	45.03	45.37	53.63	62.24	70.84	75.29	79.45	83.75	83.49	60.95	35.80	19.03	19.03	19.03	19.03	19.45	34.32	44.99	49.61	64.90	78.75	66.90	52.97	39.92	39.03	39.03	39.03	39.03	39.03	41.11	45.28	49.44
'E' Path 4 (in)	49.38	44.70	40.13	40.03	40.37	48.63	57.24	65.84	70.29	74.45	78.75	78.49	55.95	30.80	14.03	14.03	14.03	14.03	14.45	29.32	39.99	44.61	59.40	73.75	58.92	41.47	25.43	24.03	24.03	24.03	24.03	24.03	25.54	28.57	31.60
'E' Path 5 (in)	32.19	33.61	35.02	35.03	35.37	43.63	52.24	60.84	65.29	69.45	73.75	73.49	50.95	25.80	9.03	9.03	9.03	9.03	9.45	24.32	34.99	39.61	54.90	68.75	50.94	29.98	11.05	9.03	9.03	9.03	9.03	9.03	9.97	11.86	13.75

NOTES:
1. Points Listed are 10th Points in the Span or ℄ Splice. Points 1.0 and 4.0 are at ℄ Bearing of Abutments.

Revision Dates (Preliminary Stage Only)

	MM/YY
	MM/YY
	MM/YY
	MM/YY
	MM/YY
	MM/YY

	INITIAL	DATE
Designed By	XXX	MM/YY
Checked By	XXX	MM/YY

Detail	INITIAL	DATE
Detailed By	XXX	MM/YY
Checked By	XXX	MM/YY

Quantities	INITIAL	DATE
Quantities By	XXX	MM/YY
Checked By	XXX	MM/YY

Print Date:	9/27/2010
File Name:	16311FBE_PH2_33_PT_Path_Details.dgn
Horiz. Scale:	Vert. Scale: As Noted
Unit Information	Unit Leader Initials

FIGG
1873 S. Bellaire St., Ste 1500
Denver CO, 80222

Sheet Revisions

Date:	Comments	Init.

Colorado Department of Transportation
DOT
2000 South Holly Street
Denver, CO 80222
Phone: 303-972-9112 FAX: 303-972-9114
Region 6 RLB

As Constructed

No Revisions:	
Revised:	
Void:	

I-25/SANTA FE INTERCHANGE
I-25 OVER SANTA FE
LONG. POST-TENSIONING LAYOUT

Designer:	M. Keller	Structure Numbers	F-16-XS
Detailer:	S. Fall		
Sheet Subset:	Bridge	Subset Sheets:	B33 of 55

Project No./Code	
IM 0254-394	
16311	
Sheet Number	92

sfall 4:29:24 PM G:\Projects\I-25_Santa_Fe\16311\Bridge\Drawings\16311FBE_PH2_33_PT_Path_Details.dgn
9/27/2010 CDOT-PDFHighQuality_XM.pltcfg CDOT-PenTable.tbl

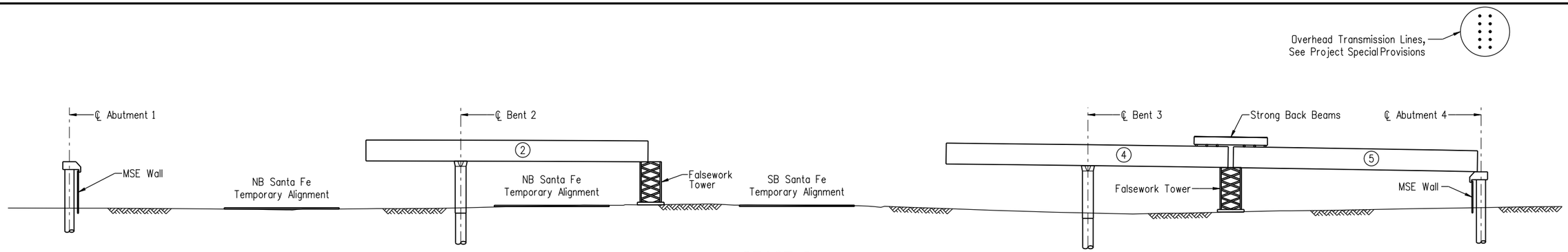

STAGE I

1. Construct Shafts, Piers, and Abutment Seats.
2. Erect Falsework Towers.
3. Erect Girder Sections 2, 4 and 5, Bracing Section 4 to 5 with Strong Back Beams.

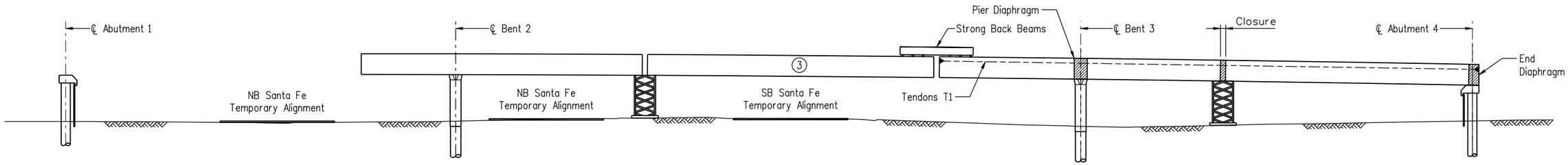

STAGE II

1. Pour Abutment 4 End Diaphragms, Pier 3 Diaphragms and Span 3 Closures.
2. When Diaphragm and Closure Concrete Reaches 4000 psi., Stress Tendons T1.
3. Erect Girder Sections 3 supported by Strong Back Beams.

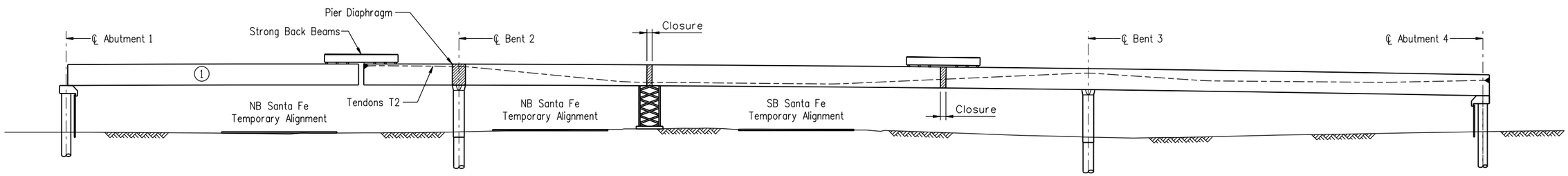

STAGE III

1. Pour Pier 2 Diaphragms and Span 2 Closures.
2. When Diaphragm and Closure Concrete Reaches 4000 psi., Stress Tendons T2.
3. Remove Span 3 Falsework Towers.
4. Erect Girder Sections 1 Supported by Strong Back Beams.

Revision Dates (Preliminary Stage Only)
MM/YY

Design	INITIAL	DATE
Designed By	RKM	11/09
Checked By	MSK	11/09

Detail	INITIAL	DATE
Detailed By	RJA	11/09
Checked By	MSK	11/09

Quantities	INITIAL	DATE
Quantities By	RKM	11/09
Checked By	MSK	1/09

Print Date: 9/27/2010	
File Name: 16311FBE_PH2_45_Const._Schem_1.dgn	
Horiz. Scale: 1:40	Vert. Scale: As Noted
Unit Information	Unit Leader Initials

FIGG
1873 S. BELLAIRE ST., STE 1500
DENVER CO, 80222

Sheet Revisions		
Date:	Comments	Init.

Colorado Department of Transportation
DEPARTMENT OF TRANSPORTATION
2000 South Holly Street
Denver, CO 80222
Phone: 303-972-9112 FAX: 303-972-9114
Region 6 RLB

As Constructed	
No Revisions:	
Revised:	
Void:	

I-25/SANTA FE INTERCHANGE
I-25 OVER SANTA FE
CONSTRUCTION SCHEMATIC 1

Designer:	M. Keller	Structure Numbers	F-16-XS
Detailer:	S. Fall		
Sheet Subset:	BRIDGE	Subset Sheets:	B45 of 55

Project No./Code	
IM 0254-394	
16311	
Sheet Number	93

sfall 4:30:26 PM G:\Projects\I-25_Santa_Fe\16311\Bridge\Drawings\16311FBE_PH2_45_Const._Schem_1.dgn
9/27/2010 CDOT-PDFHighQuality_XM.pltcfg CDOT-PenTable.tbl

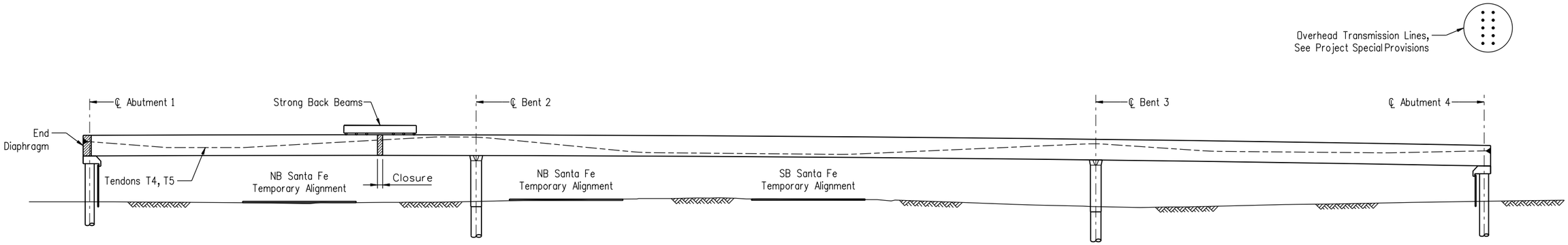

STAGE IV

1. Pour Abutment 1 End Diaphragms and Span 1 Closures.
2. When Diaphragm and Closure Concrete Reaches 4000 psi., Stress Tendons T4 and T5.
3. Remove Span 2 Falsework Towers.

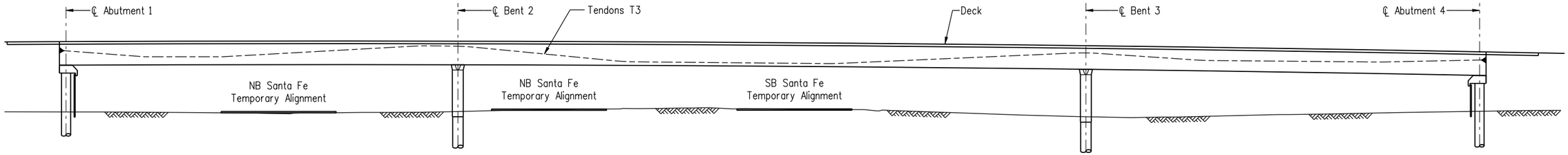

STAGE V

1. Cast Deck on Girders, First in Positive Moment Regions, Then Over Piers.
2. After Concrete Deck Reaches 4000 psi., Stress Tendons T3.
3. Backfill Behind Abutment. Place Approach Slabs, Barriers, Wearing Surface and other Miscellaneous Items.

Revision Dates (Preliminary Stage Only)

MM/YY						

Design	INITIAL	DATE
Designed By	RKM	11/09
Checked By	MSK	11/09

Detail	INITIAL	DATE
Detailed By	RJA	11/09
Checked By	MSK	11/09

Quantities	INITIAL	DATE
Quantities By	RKM	11/09
Checked By	MSK	11/09

sfall 4:31:03 PM G:\Projects\I-25_Santa_Fe\16311\Bridge\Drawings\16311FBE_PH2_46_Const._Schem_2.dgn
9/27/2010 CDOT-PDFHighQuality_XM.pltcfg CDOT-PenTable.tbl

Print Date: 9/27/2010
File Name: 16311FBE_PH2_46_Const._Schem_2.dgn
Horiz. Scale: 1:1 Vert. Scale: As Noted
Unit Information Unit Leader Initials

FIGG
1873 S. Bellaire St., Ste 1500
Denver CO, 80222

Sheet Revisions

Date:	Comments	Init.

Colorado Department of Transportation
2000 South Holly Street
Denver, CO 80222
Phone: 303-972-9112 FAX: 303-972-9114
Region 6 RLB

As Constructed

No Revisions:	
Revised:	
Void:	

I-25/SANTA FE INTERCHANGE
I-25 OVER SANTAFE
CONSTRUCTION SCHEMATIC 2

Designer:	M. Keller	Structure Numbers	F-16-XS
Detailer:	S. Fall		
Sheet Subset:	BRIDGE	Subset Sheets:	B46 of 55

Project No./Code	
IM 0254-394	
16311	
Sheet Number	94

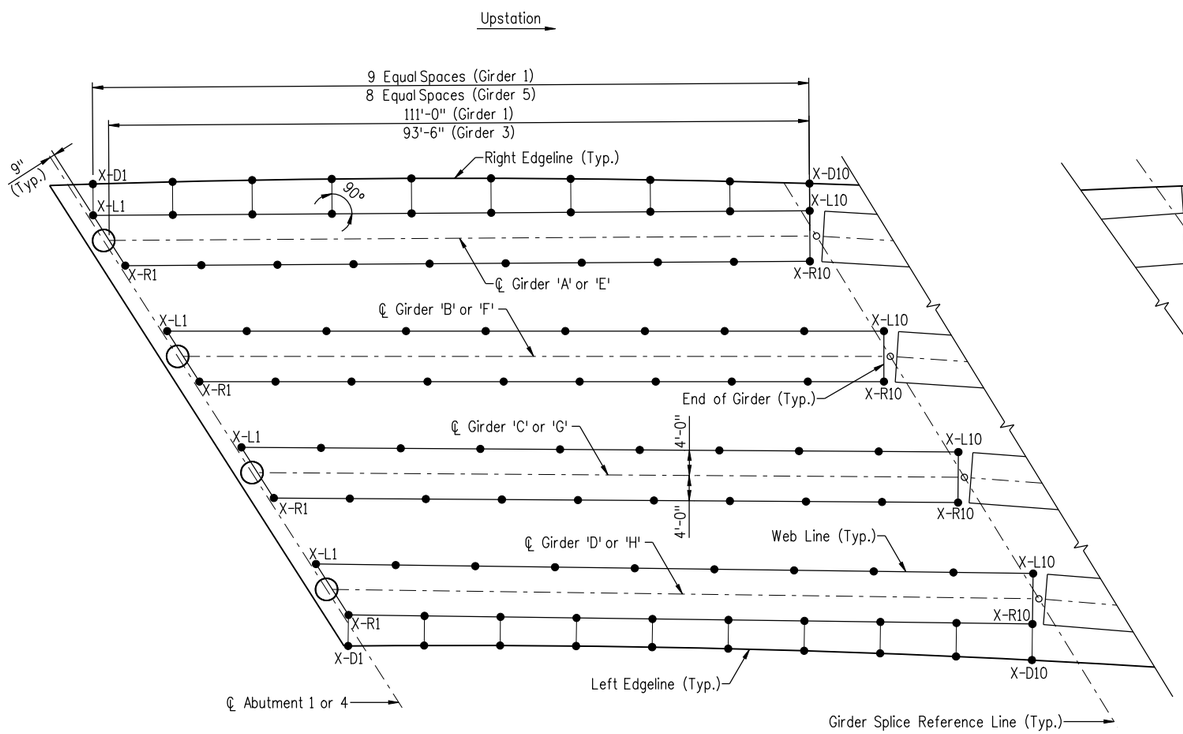

BRIDGE DECK ELEVATIONS KEY PLAN

(Girder 1 Shown, Girder 5 Similar)

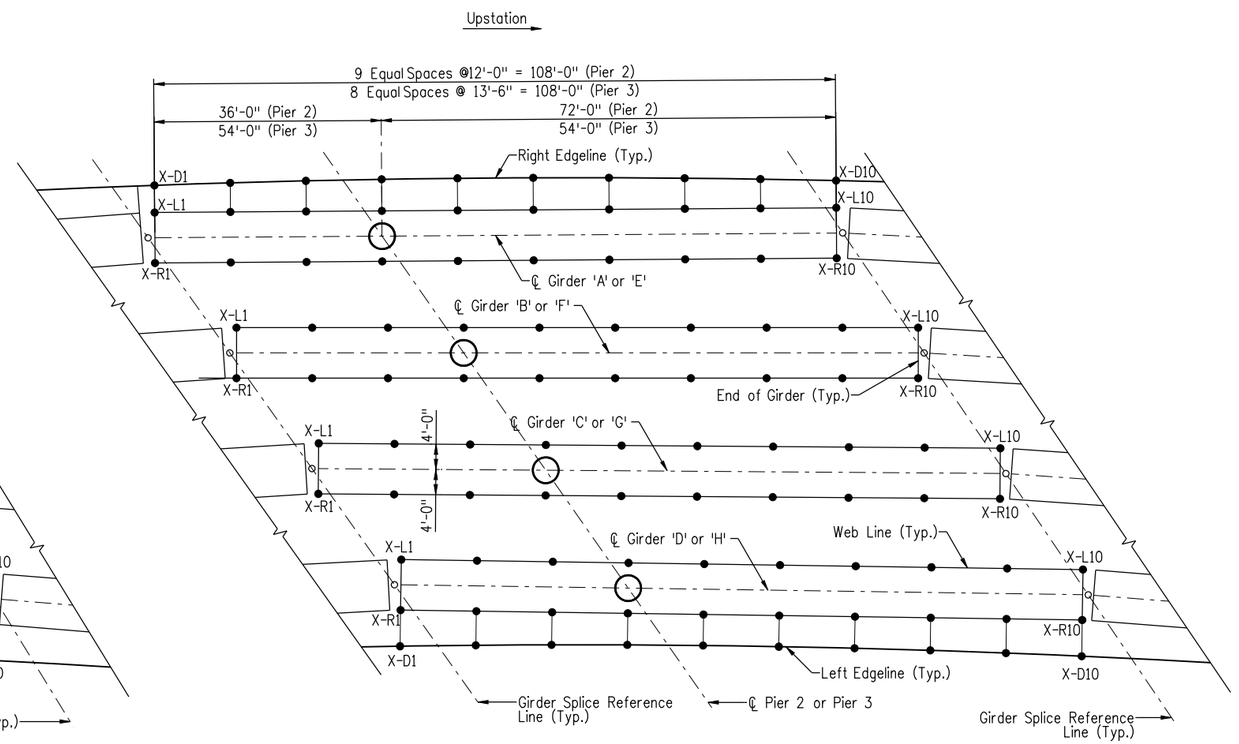

BRIDGE DECK ELEVATIONS KEY PLAN

(Girder 2 Shown, Girder 4 Similar)

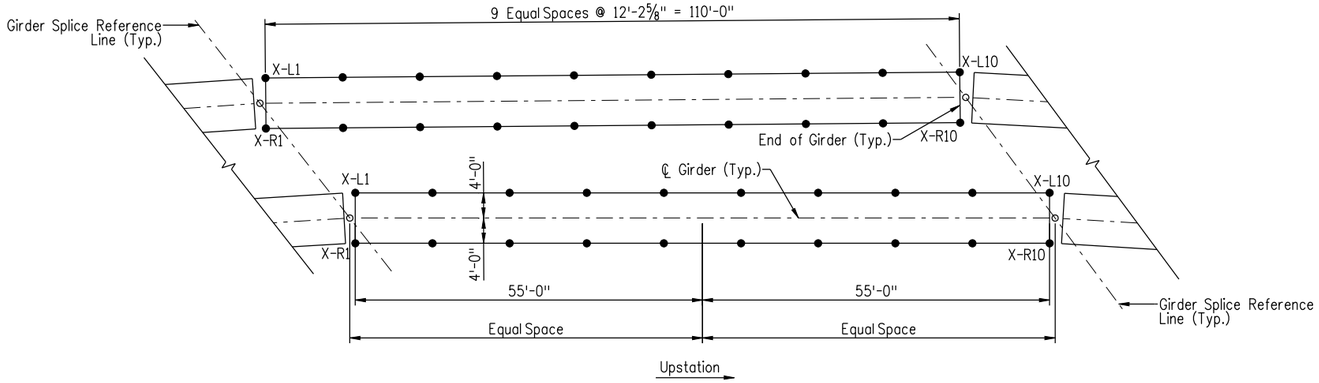

BRIDGE DECK ELEVATIONS KEY PLAN

(Girder 3)

X - L5

- L5: Point Number
- Point: D = Edge of Deck, L = Left Web Line, R = Right Web Line
- X: Girder Designation (A1, B1...)

ELEVATION POINT LEGEND

NOTES:
1. Abutment 1 and Pier 2 Shown, Abutment 4 and Pier 2 Similar.
2. Bridge Deck Elevations are at the Top of 3" SMA Wearing Surface. Points Numbers Along Web Lines Increase in the Direction of Upstation.

Revision Dates (Preliminary Stage Only)	MM/YY

	Design			Detail			Quantities		
	INITIAL	DATE		INITIAL	DATE		INITIAL	DATE
Designed By	XXX	MM/YY	Detailed By	XXX	MM/YY	Quantities By	XXX	MM/YY
Checked By	XXX	MM/YY	Checked By	XXX	MM/YY	Checked By	XXX	MM/YY

sfall 4:32:08 PM G:\Projects\I-25_Santa_Fe\16311\Bridge\Drawings\16311FBE_PH2_46_Deck_ElevI.dgn
9/27/2010 CDOT-PDFHighQuality_XM.pltcfg CDOT-PenTable.tbl

Print Date: 9/27/2010	Sheet Revisions	Colorado Department of Transportation	As Constructed
File Name: 16311FBE_PH2_46_Deck_ElevI.dgn	Date: / Comments / Init.	2000 South Holly Street, Denver, CO 80222	No Revisions:
Horiz. Scale: 1:1 Vert. Scale: As Noted		Phone: 303-972-9112 FAX: 303-972-9114	Revised:
Unit Information Unit Leader Initials		Region 6 RLB	Void:
FIGG 1873 S. Bellaire St., Ste 1500 Denver CO, 80222			

I-25/SANTA FE INTERCHANGE I-25 OVER SANTA FE BRIDGE DECK ELEVATIONS I			
Designer: M. Keller	Structure Numbers	F-16-XS	Project No./Code
Detailer: S. Fall			IM 0254-394
Sheet Subset: Bridge	Subset Sheets: B46 of 55		16311
			Sheet Number 95

GENERAL NOTES

ALL CONSTRUCTION SHALL BE DONE IN ACCORDANCE WITH THE COLORADO DEPARTMENT OF TRANSPORTATION (CDOT) 2005 STANDARD SPECIFICATIONS FOR ROAD AND BRIDGE CONSTRUCTION, APPLICABLE TO THE PROJECT.

EXCEPT AS SHOWN IN THE PLANS, STRUCTURE EXCAVATION AND BACKFILL SHALL BE IN ACCORDANCE WITH M-206-2.

SHORING IS REQUIRED FOR BRIDGE PIER EXCAVATION ADJACENT TO EXISTING ROADWAYS.

EXPANSION JOINT MATERIAL SHALL MEET AASHTO SPECIFICATION M213.

A COLORED STRUCTURAL CONCRETE STAIN FINISH WILL BE REQUIRED, AS SHOWN ON THE PLANS, ON EXPOSED CONCRETE SURFACES. THE COLOR APPLIED TO THE GIRDERS SHALL BE DARK GRAY, EQUIVALENT TO FEDERAL STANDARD 595B COLOR NO. 26251. THE COLOR APPLIED TO THE BRIDGE RAIL, DECK EDGES, AND ABUTMENT FASCIA PANELS SHALL BE LIGHT GRAY, COLOR NO. 26440. AN ANTI-GRAFFITI COATING SHALL BE APPLIED TO ALL LOCATIONS RECEIVING CONCRETE STAIN, APPLIED AFTER STAINING.

LEVELING PADS ARE UNLAMINATED BEARINGS. THEY SHALL BE CUT OR MOLDED FROM AASHTO ELASTOMER GRADE 3, 4, OR 5 AS DESCRIBED IN TABLES 705-1 AND 705-2 WITH A DUROMETER (SHORE "A") HARDNESS OF 60.

GRADE 60 REINFORCING STEEL IS REQUIRED.

ALL REINFORCING STEEL SHALL BE EPOXY COATED UNLESS OTHERWISE NOTED.

Ⓝ DENOTES NON COATED REINFORCING STEEL.

ALL THE PROVISIONS FOR BRIDGE DECK CONCRETE SHALL ALSO APPLY TO APPROACH SLAB CONCRETE.

THE FOLLOWING TABLE GIVES THE MINIMUM CLASS B LAP SPLICE LENGTH FOR EPOXY COATED REINFORCING BARS PLACED IN ACCORDANCE WITH SUBSECTION 602.06. THESE SPLICE LENGTHS SHALL BE INCREASED BY 25% FOR BARS SPACED AT LESS THAN 6" ON CENTER.

BAR SIZE	#4	#5	#6	#7	#8	#9	#10	#11
SPLICE LENGTH FOR CLASS D CONCRETE	1'-3"	1'-7"	2'-5"	2'-10"	3'-8"	4'-8"	5'-10"	7'-3"

WHEN THE CONTRACTOR ELECTS TO SUBSTITUTE EPOXY COATED REINFORCEMENT FOR BLACK REINFORCING BARS, THE MINIMUM LAP SPLICE SHALL BE AS DESCRIBED ABOVE.

THE FOLLOWING TABLE GIVES THE MINIMUM CLASS B LAP SPLICE LENGTH FOR BLACK REINFORCING BARS PLACED IN ACCORDANCE WITH SUBSECTION 602.06. THESE SPLICE LENGTHS SHALL BE INCREASED BY 25% FOR BARS SPACED AT LESS THAN 6" ON CENTER.

BAR SIZE	#4	#5	#6	#7	#8	#9	#10	#11
SPLICE LENGTH FOR CLASS D CONCRETE	1'-1"	1'-4"	1'-7"	1'-11"	2'-5"	3'-1"	3'-11"	4'-10"

THE CONTRACTOR SHALL BE RESPONSIBLE FOR THE STABILITY OF THE STRUCTURE DURING CONSTRUCTION.

FOR STRUCTURE NUMBER INSTALLATION, SEE STANDARD S-614-12.

ALL CONCRETE IN CONTACT WITH SOIL SHALL MEET CLASS 2 SULFATE SEVERITY EXPOSURE REQUIREMENTS.

ALL ELECTRICAL CONDUIT IN BRIDGE CONCRETE SHALL BE GALVANIZED RIGID METAL CONDUIT. ALL CONDUIT RUNS SHALL INCLUDE A PULL STRING FOR FUTURE WIRING INSTALLATION.

SEE PROJECT GENERAL NOTES FOR ADDITIONAL INFORMATION ON STONE MATRIX ASPHALT (FIBERS)(ASPHALT) OVERLAY TO BE APPLIED TO THE BRIDGE.

STATIONS, ELEVATIONS, AND DIMENSIONS CONTAINED IN THESE PLANS ARE CALCULATED FROM A RECENT FIELD SURVEY. THE CONTRACTOR SHALL VERIFY ALL DEPENDENT DIMENSIONS IN THE FIELD BEFORE ORDERING OR FABRICATING ANY MATERIAL.

THE INFORMATION SHOWN ON THESE PLANS CONCERNING THE TYPE AND LOCATION OF UNDERGROUND UTILITIES IS NOT GUARANTEED TO BE ACCURATE OR ALL INCLUSIVE. THE CONTRACTOR IS RESPONSIBLE FOR MAKING HIS OWN DETERMINATION AS TO THE TYPE AND LOCATION OF UNDERGROUND UTILITIES AS MAY BE NECESSARY TO AVOID DAMAGE THERETO. THE CONTRACTOR SHALL CONTACT THE UTILITY NOTIFICATION CENTER OF COLORADO AT 1-800-922-1987 AT LEAST 2 DAYS (NOT INCLUDING THE DAY OF NOTIFICATION) PRIOR TO ANY EXCAVATION OR OTHER EARTHWORK.

PERMANENT DECK FORMS ARE REQUIRED, STEEL DECK FORMS ARE NOT ALLOWED.

DESIGN DATA

AASHTO, FOURTH EDITION LRFD 2007, AS AMENDED BY 2008 INTERIMS

DESIGN METHOD: LOAD AND RESISTANCE FACTOR DESIGN

LIVE LOAD: HL-93 (DESIGN TRUCK OR TANDEM, AND DESIGN LANE LOAD)

DEAD LOAD: ASSUMES 38 LBS. PER SQ. FT. FOR BRIDGE DECK OVERLAY
ASSUMES 38 LBS. PER SQ. FT. & 50 LBS. PER SQ. FT. FOR 3" & 4" PRESTRESSED DECK PANELS RESPECTIVELY.

REINFORCED CONCRETE:

CLASS B CONCRETE:	f'c	=	3,500 psi
CLASS D CONCRETE:	f'c	=	4,500 psi
REINFORCING STEEL:	fy	=	60,000 psi

CAISSON CONCRETE:

CLASS BZ CONCRETE:	f'c	=	4,000 psi
REINFORCING STEEL:	fy	=	60,000 psi

POST-TENSIOND CONCRETE FOR THE SPLICES & DIAPHRAGMS:

CLASS S40 CONCRETE:	f'c	=	5,800 psi AT 28 DAYS
	f'ci	=	4,500 psi
	f's	=	270,000 psi

PRECAST DECK PANELS:

CLASS PS CONCRETE:	f'c	=	5,800 psi AT 28 DAYS
	f's	=	270,000 psi

PRECAST U-GIRDERS

CLASS PS CONCRETE:	f'c	=	8,000 psi@ 28 DAYS
	f'ci	=	6,000 psi@ RELEASE
	f's	=	270,000 psi

ABBREVIATIONS

B.F.	=	BACK FACE
B.O.	=	BOTTOM OF
C.I.P.	=	CAST-IN-PLACE
CONST.	=	CONSTRUCTION
E.F.	=	EACH FACE
EL.	=	ELEVATION
F.F.	=	FAR FACE
HCL	=	HORIZONTAL CONTROL LINE
N.F.	=	NEAR FACE

BRIDGE DESCRIPTION

11 SPAN CURVED SPLICED PRECAST POST-TENSIONED CONCRETE U GIRDERS, CONTINUOUS AND COMPOSITE IN 3 SUPERSTRUCTURE UNITS.

RAMP 1 OVER I-25, RAMP 2 & SANTA FE
39'-0" WIDTH OUT TO OUT
36'-0" WIDTH RAIL TO RAIL
BRIDGE RAIL TYPE 7

FOR BURIED UTILITY INFORMATION
811
THREE (3) BUSINESS DAYS BEFORE YOU DIG
CALL 811
(or 1-800-922-1987)
UTILITY NOTIFICATION CENTER OF COLORADO (UNCC)
www.uncc.org

CROSS REFERENCE DRAWING NUMBER
(IF BLANK, REFERENCE IS TO SAME SHEET)
BRX
XX
SECTION OR DETAIL IDENTIFICATION

INDEX OF DRAWINGS

BR1	GENERAL INFORMATION	BR61	UNIT 3 PT LAYOUT (3 OF 3)
BR2	SUMMARY OF QUANTITIES	BR62	POST TENSIONING TENDON INFORMATION
BR3	GENERAL LAYOUT (1 OF 3)	BR63	DIAPHRAGM DETAILS
BR4	GENERAL LAYOUT (2 OF 3)	BR64	PRECAST PANEL DECK FORM (1 OF 2)
BR5	GENERAL LAYOUT (3 OF 3)	BR65	PRECAST PANEL DECK FORM (2 OF 2)
BR6	ARCHITECTURAL DETAILS	BR66	UNIT 1 DECK REINFORCING PLAN
BR7	TYPICAL SECTION & PROFILE GRADE	BR67	UNIT 2 DECK REINFORCING PLAN
BR8	ENGINEERING GEOLOGY (1 OF 3)	BR68	UNIT 3 DECK REINFORCING PLAN
BR9	ENGINEERING GEOLOGY (2 OF 3)	BR69	FALSEWORK CONSTRAINTS (1 OF 3)
BR10	ENGINEERING GEOLOGY (3 OF 3)	BR70	FALSEWORK CONSTRAINTS (2 OF 3)
BR11	BORING LOG INFORMATION	BR71	FALSEWORK CONSTRAINTS (3 OF 3)
BR12	CONSTRUCTION LAYOUT (1 OF 4)	BR72	LIGHT POLE SUPPORT DETAILS
BR13	CONSTRUCTION LAYOUT (2 OF 4)	BR73	BRIDGE DRAIN DETAILS (1 OF 2)
BR14	CONSTRUCTION LAYOUT (3 OF 4)	BR74	BRIDGE DRAIN DETAILS (2 OF 2)
BR15	CONSTRUCTION LAYOUT (4 OF 4)	BR75	BEARING DEVICE (TYPE III) (1 OF 2)
BR16	UNIT 2 ERECTION SEQUENCE (1 OF 2)	BR76	BEARING DEVICE (TYPE III) (2 OF 2)
BR17	UNIT 2 ERECTION SEQUENCE (2 OF 2)	BR77	ACCESS DOOR DETAILS
BR18	UNIT 3 ERECTION SEQUENCE (1 OF 2)	BR78	BRIDGE RAIL TYPE 7
BR19	UNIT 3 ERECTION SEQUENCE (2 OF 2)	BR79	FENCE CHAIN LINK (SPECIAL) (36 INCH)
BR20	UNIT 1 ERECTION SEQUENCE (1 OF 2)	BR80	APPROACH SLAB DETAILS
BR21	UNIT 1 ERECTION SEQUENCE (2 OF 2)	BR81	APPROACH SLAB INLET DETAILS (1 OF 2)
BR22	CAISSON LAYOUT (1 OF 4)	BR82	APPROACH SLAB INLET DETAILS (2 OF 2)
BR23	CAISSON LAYOUT (2 OF 4)	BR83	BRIDGE EXPANSION DEVICE (0-4 INCH)(1 OF 2)
BR24	CAISSON LAYOUT (3 OF 4)	BR84	BRIDGE EXPANSION DEVICE (0-4 INCH)(2 OF 2)
BR25	CAISSON LAYOUT (4 OF 4)	BR85	BRIDGE EXPANSION DEVICE (0-12 INCH)(1 OF 2)
BR26	CAISSON DETAILS (1 OF 2)	BR86	BRIDGE EXPANSION DEVICE (0-12 INCH)(2 OF 2)
BR27	CAISSON DETAILS (2 OF 2)	BR87	MECHANICALLY STABILIZED EARTH BACKFILL (1 OF 2)
BR28	ABUTMENT 1 PLAN & ELEVATION	BR88	MECHANICALLY STABILIZED EARTH BACKFILL (2 OF 2)
BR29	ABUTMENT 1 DETAILS	BR89	EXCAVATION & BACKFILL DETAILS
BR30	WINGWALL DETAILS	BR90	BRIDGE DECK ELEVATIONS (1 OF X)
BR31	ABUTMENT 12 PLAN & ELEVATION	BR91	BRIDGE DECK ELEVATIONS (2 OF X)
BR32	ABUTMENT 12 DETAILS	BR92	BRIDGE DECK ELEVATIONS (3 OF X)
BR33	EXPANSION PIER DETAILS (1 OF 6)	BR93	BRIDGE DECK ELEVATIONS (4 OF X)
BR34	EXPANSION PIER DETAILS (2 OF 6)	BR94	BRIDGE DECK ELEVATIONS (5 OF X)
BR35	EXPANSION PIER DETAILS (3 OF 6)	BR95	BRIDGE DECK ELEVATIONS (6 OF X)
BR36	EXPANSION PIER DETAILS (4 OF 6)	BR96	BRIDGE DECK ELEVATIONS (7 OF X)
BR37	EXPANSION PIER DETAILS (5 OF 6)	BR97	BRIDGE DECK ELEVATIONS (8 OF X)
BR38	EXPANSION PIER DETAILS (6 OF 6)	BR98	BRIDGE DECK ELEVATIONS (9 OF X)
BR39	INTERIOR PIER DETAILS (1 OF 3)	BR99	BRIDGE DECK ELEVATIONS (10 OF X)
BR40	INTERIOR PIER DETAILS (2 OF 3)		
BR41	INTERIOR PIER DETAILS (3 OF 3)		
BR42	PIER 5 DETAILS		
BR43	SUPERSTRUCTURE DETAILS		
BR44	UNIT 1 SEGMENT LAYOUT		
BR45	UNIT 2 SEGMENT LAYOUT		
BR46	UNIT 3 SEGMENT LAYOUT		
BR47	GIRDER ERECTION BRACING DETAILS		
BR48	GIRDER DETAILS (1 OF 4)		
BR49	GIRDER DETAILS (2 OF 4)		
BR50	GIRDER DETAILS (3 OF 4)		
BR51	GIRDER DETAILS (4 OF 4)		
BR52	TYPICAL SPLICE DETAILS		
BR53	POST TENSIONING ANCHORAGE DETAILS		
BR54	UNIT 1 PT LAYOUT (1 OF 2)		
BR55	UNIT 1 PT LAYOUT (2 OF 2)		
BR56	UNIT 2 PT LAYOUT (1 OF 3)		
BR57	UNIT 2 PT LAYOUT (2 OF 3)		
BR58	UNIT 2 PT LAYOUT (3 OF 3)		
BR59	UNIT 3 PT LAYOUT (1 OF 3)		
BR60	UNIT 3 PT LAYOUT (2 OF 3)		

Revision Dates (Preliminary Stage Only)

Design	INITIAL	DATE
Designed By	WJM	5/09
Checked By	LF	6/09

Detail	INITIAL	DATE
Detailed By	RAD	5/09
Checked By	WJM	5/09

Quantities	INITIAL	DATE
Quantities By	WJM	5/09
Checked By	RAD	6/09

soellner 1:44:39 PM K:\08276\16311\Phase 2\Bridge\Drawings\16311BRDG_PH2_F-16-XR_GenInfo.dgn
9/27/2010 CDOT-PDFDraftQuality_XM.pltcfg *

Print Date: 9/27/2010
File Name: 16311BRDG_PH2_F-16-XR_GenInfo.dgn
Horiz. Scale: 1:1 Vert. Scale: As Noted
Unit Information Unit Leader Initials

Summit Engineering Group, Incorporated — Consulting Structural Engineers
10822 Toller Drive Suite 330
Littleton, CO 80127

Sheet Revisions

Date:	Comments	Init.

Colorado Department of Transportation
DOT — Department of Transportation
2000 South Holly Street
Denver, CO 80222
Phone: 303-972-9112 FAX: 303-972-9114
Region 6 RLB

As Constructed
No Revisions:
Revised:
Void:

I-25/SANTA FE INTERCHANGE
RAMP 1 FLYOVER
GENERAL INFORMATION

Designer: x
Detailer: K. Soellner
Sheet Subset: Bridge
Structure Numbers: F-16-XR
Subset Sheets: BR1 of x

Project No./Code
IM 0254-394
16311
Sheet Number 96

SUMMARY OF QUANTITIES

	ITEM NO.	DESCRIPTION	UNIT	SUPERSTRUCTURE	ABUTMENT 1	PIER 2	PIER 3	PIER 4	PIER 5	PIER 6	PIER 7	PIER 8	PIER 9	PIER 10	PIER 11	ABUTMENT 12	APPROACH SLABS (2)	TOTALS
	206	STRUCTURE EXCAVATION	CY															0
	206	STRUCTURE BACKFILL (CLASS 1)	CY															0
	206	STRUCTURE BACKFILL (CLASS 2)	CY															0
	206	MECHANICAL REINFORCEMENT OF SOIL	CY															0
	206	SHORING (AREA 5)	LS															1
	403	STONE MATRIX ASPHALT (FIBERS) (ASPHALT)	TON															0
	503	DRILLED CAISSON (24 INCH)	LF															0
	503	DRILLED CAISSON (48 INCH)	LF															0
	503	DRILLED CAISSON (72 INCH)	LF															0
(1)	509	PROVIDE TEMPORARY SUPPORT	LS		1													1
	512	BEARING DEVICE (TYPE III)	EA					4				4						8
	513	BRIDGE DRAIN SPECIAL	EA	10														10
	515	WATERPROOFING (MEMBRANE)	SY															0
	518	BRIDGE EXPANSION DEVICE (0-4 INCH)	LF														72	72
	518	BRIDGE EXPANSION DEVICE (0-12 INCH)	LF					36				36						72
	601	CONCRETE CLASS D (BRIDGE)	CY															0
	601	CONCRETE CLASS S40	CY															0
	601	STRUCTURAL CONCRETE COATING (ANTI-GRAFFITI)	SF															
	601	STRUCTURAL CONCRETE STAIN	SY															0
	602	REINFORCING STEEL	LB															0
	602	REINFORCING STEEL (EPOXY COATED)	LB															0
	603	15 INCH PLASTIC PIPE	LF															0
	606	BRIDGE RAIL TYPE 7	LF	3,524													80	3,604
	607	FENCE CHAIN LINK (SPECIAL) (36 INCH)	LF	2,222														2,222
	613	1 INCH ELECTRICAL CONDUIT	LF	30														30
	613	2 INCH ELECTRICAL CONDUIT	LF	7,048													240	7,288
	618	PRESTRESSING STEEL BAR	LB															0
	618	PRESTRESSING STEEL STRAND	MKFT															0
	618	PRESTRESSED CONCRETE SLAB (DEPTH LESS THAN 6 INCHES)	SF															0
	618	PRECAST CONCRETE U GIRDER (PRE-TENSIONED AND POST-TENSIONED)	LF															0
	631	ALTERNATE BRIDGE DESIGN & CONSTRUCTION	LS															1

(1) Temporary Support is the Item for support of girder Segments prior to continuity post-tensioning, identified as Falsework in the plans. See Temporary Support Special Provisions.

Revision Dates (Preliminary Stage Only)

Design			Detail			Quantities		
	INITIAL	DATE		INITIAL	DATE		INITIAL	DATE
Designed By	GAR	08/10	Detailed By	RAD	08/10	Quantities By		
Checked By			Checked By	GAR	10/10	Checked By		

soellner 1:44:44 PM K:\08276\16311\Phase 2\Bridge\Drawings\16311BRDG_PH2_F-16-XR_SAQ.dgn
9/27/2010 CDOT-PDFDraftQuality_XM.pltcfg *

Print Date: 9/27/2010
File Name: 16311BRDG_PH2_F-16-XR_SAQ.dgn
Horiz. Scale: 1:1 Vert. Scale: As Noted
Unit Information Unit Leader Initials

Summit Engineering Group, Incorporated
Consulting Structural Engineers
10822 Teller Drive Suite 330
Littleton, CO 80127

Sheet Revisions

Date:	Comments	Init.

Colorado Department of Transportation
DEPARTMENT OF TRANSPORTATION
2000 South Holly Street
Denver, CO 80222
Phone: 303-972-9112 FAX: 303-972-9114
Region 6 RLB

As Constructed
No Revisions:
Revised:
Void:

I-25/SANTA FE INTERCHANGE
RAMP 1 FLYOVER
SUMMARY OF QUANTITIES

Designer: X
Detailer: K. Soellner
Sheet Subset: Bridge
Structure Numbers: F-16-XR
Subset Sheets: Bxx of XX

Project No./Code
IM 0254-394
16311
Sheet Number 97

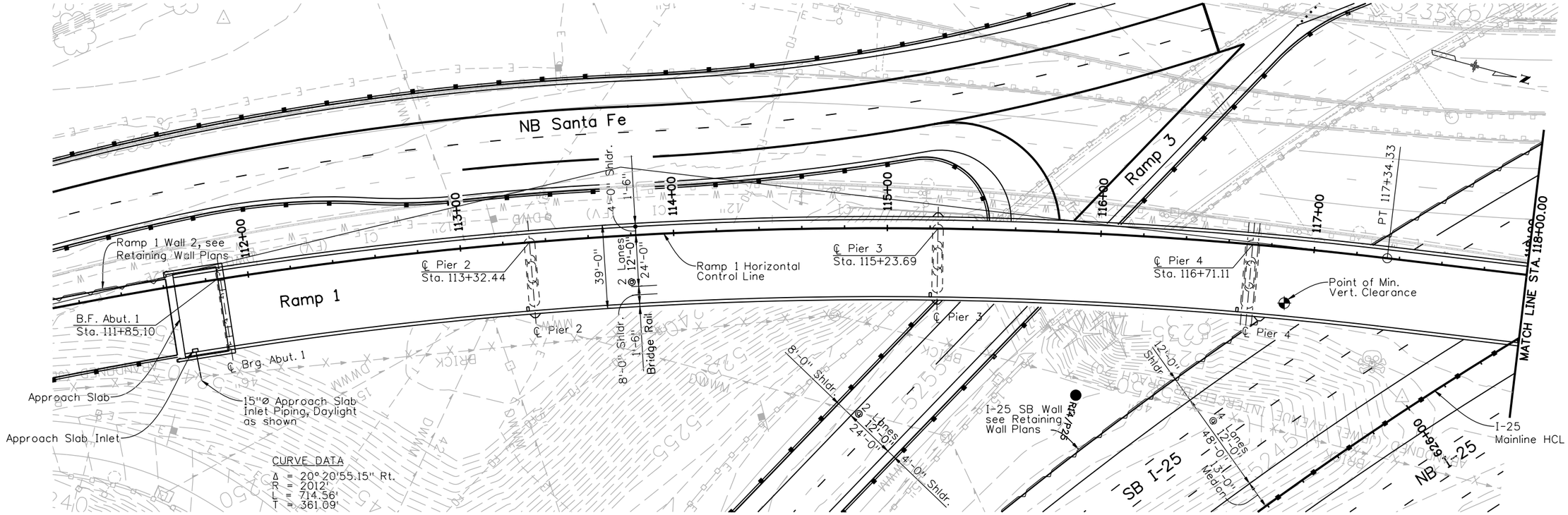

PLAN

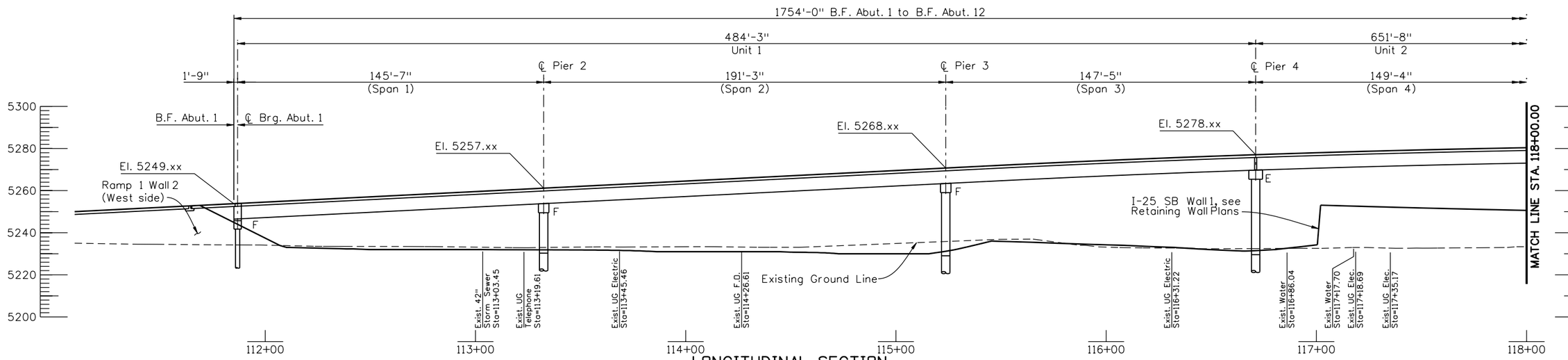

LONGITUDINAL SECTION
Taken at Ramp 1 HCL

Design			Detail			Quantities		
	INITIAL	DATE		INITIAL	DATE		INITIAL	DATE
Designed By	GR/PRS	08/10	Detailed By	RAD	08/10	Quantities By		
Checked By			Checked By	PRS		Checked By		

Revision Dates (Preliminary Stage Only)

soellner 1:44:55 PM K:\08276\16311\Phase 2\Bridge\Drawings\16311BRDG_PH2_F-16-XR_GenLay01.dgn
9/27/2010 CDOT-PDFDraftQuality_XM.pltcfg *

Print Date:	9/27/2010
File Name:	16311BRDG_PH2_F-16-XR_GenLay01.dgn
Horiz. Scale:	1:50
Vert. Scale:	As Noted
Unit Information	Unit Leader Initials

Summit Engineering Group, Incorporated — Consulting Structural Engineers
10822 Teller Drive Suite 330
Littleton, CO 80127

Sheet Revisions		
Date:	Comments	Init.

Colorado Department of Transportation
DOT — Department of Transportation
2000 South Holly Street
Denver, CO 80222
Phone: 303-972-9112 FAX: 303-972-9114
Region 6 RLB

As Constructed

No Revisions:	
Revised:	
Void:	

I-25/SANTA FE INTERCHANGE
RAMP 1 FLYOVER
GENERAL LAYOUT (1 OF 3)

Designer:	G. Reese	Structure Numbers	F-16-XR
Detailer:	R. Dillon		
Sheet Subset:	Bridge	Subset Sheets:	B of XX

Project No./Code	
IM 0254-394	
16311	
Sheet Number	98

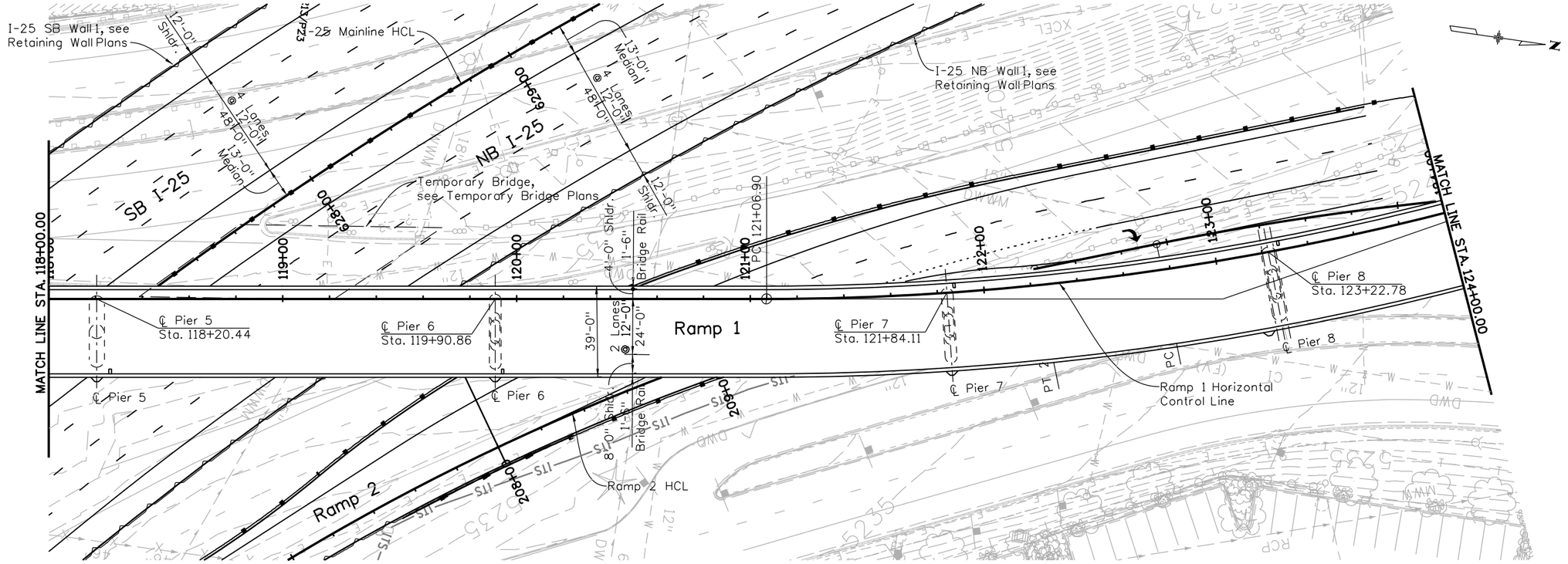

PLAN

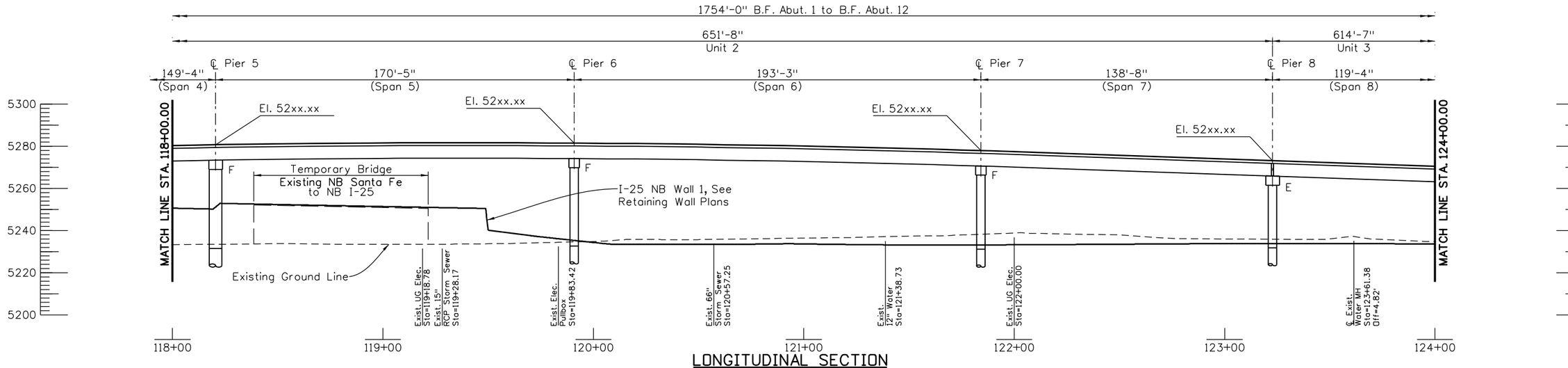

LONGITUDINAL SECTION

Taken at Ramp 1 HCL

Revision Dates (Preliminary Stage Only)

Design	INITIAL	DATE
Designed By	GR/PRS	08/10
Checked By		

Detail	INITIAL	DATE
Detailed By	RAD	08/10
Checked By	PRS	

Quantities	INITIAL	DATE
Quantities By		
Checked By		

Print Date: 9/27/2010		Sheet Revisions		
File Name: 16311BRDG_PH2_F-16-XR_GenLay02.dgn		Date:	Comments	Init.
Horiz. Scale: 1:50	Vert. Scale: As Noted			
Unit Information	Unit Leader Initials			

Summit Engineering Group, Incorporated — Consulting Structural Engineers
10822 Teller Drive Suite 330 Littleton, CO 80127

Colorado Department of Transportation
2000 South Holly Street
Denver, CO 80222
Phone: 303-972-9112 FAX: 303-972-9114
Region 6 RLB

As Constructed	
No Revisions:	
Revised:	
Void:	

I-25/SANTA FE INTERCHANGE
RAMP 1 FLYOVER
GENERAL LAYOUT (2 OF 3)

Designer: G. Reese	Structure Numbers: F-16-XR
Detailer: R. Dillon	
Sheet Subset: Bridge	Subset Sheets: B of XX

Project No./Code	
IM 0254-394	
16311	
Sheet Number	99

soeliner 2:00:37 PM K:\08276\16311\Phase 2\Bridge\Drawings\16311BRDG_PH2_F-16-XR_GenLay02.dgn
9/27/2010 CDOT-DefaultPrinter_XM.pltcfg *

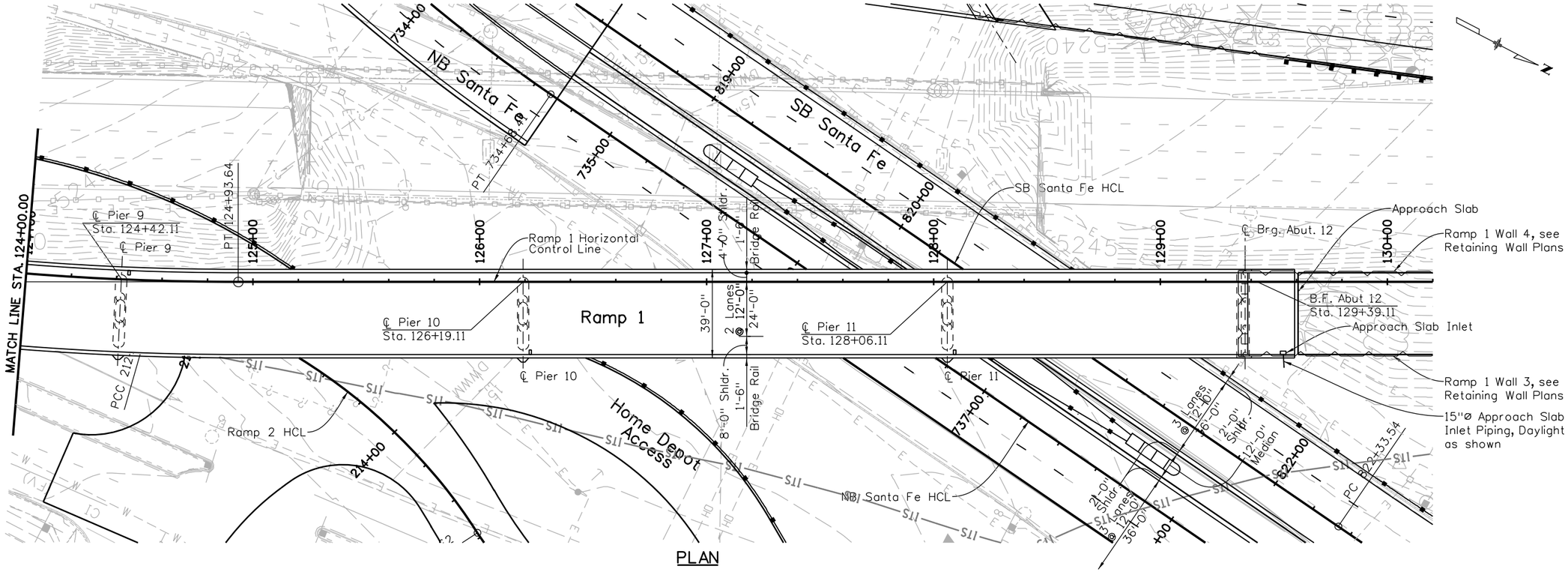

PLAN

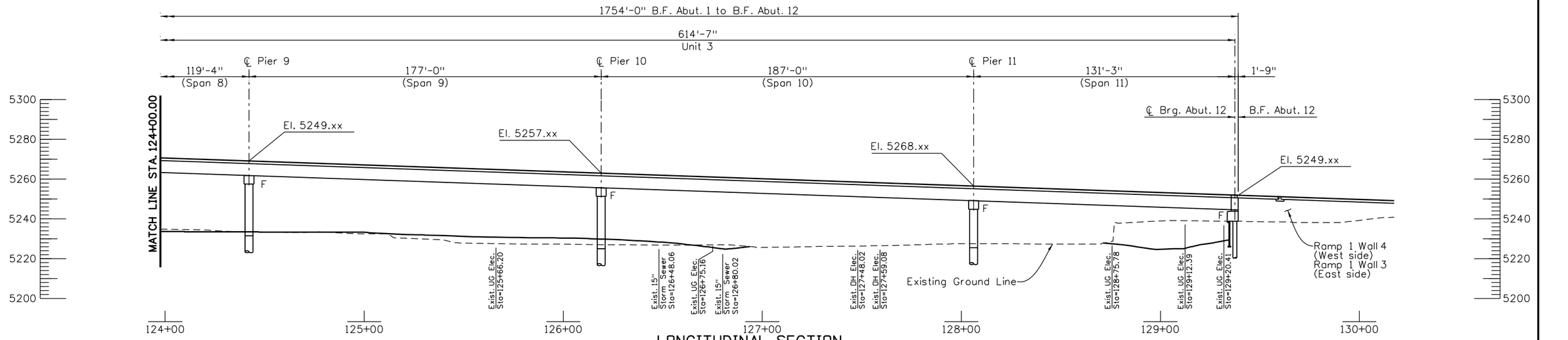

LONGITUDINAL SECTION
Taken at Ramp 1 HCL

Revision Dates (Preliminary Stage Only)

Design	INITIAL	DATE
Designed By	GR/PRS	08/10
Checked By		

Detail	INITIAL	DATE
Detailed By	RAD	08/10
Checked By	PRS	

Quantities	INITIAL	DATE
Quantities By		
Checked By		

soellner 2:02:04 PM K:\08276\16311\Phase 2\Bridge\Drawings\16311BRDG_PH2_F-16-XR_GenLay03.dgn
9/27/2010 CDOT-DefaultPrinter_XM.pltcfg *

Print Date: 9/27/2010
File Name: 16311BRDG_PH2_F-16-XR_GenLay03.dgn
Horiz. Scale: 1:50 Vert. Scale: As Noted
Unit Information Unit Leader Initials

Summit Engineering Group, Incorporated
Consulting Structural Engineers
10822 Toller Drive Suite 330
Littleton, CO 80127

Sheet Revisions

Date:	Comments	Init.

Colorado Department of Transportation
DEPARTMENT OF TRANSPORTATION
2000 South Holly Street
Denver, CO 80222
Phone: 303-972-9112 FAX: 303-972-9114
Region 6 RLB

As Constructed
No Revisions:
Revised:
Void:

I-25/SANTA FE INTERCHANGE RAMP 1 FLYOVER GENERAL LAYOUT (3 OF 3)

Designer:	G. Reese	Structure Numbers	F-16-XR
Detailer:	R. Dillon		
Sheet Subset:	Bridge	Subset Sheets:	B of XX

Project No./Code: IM 0254-394
16311
Sheet Number 100

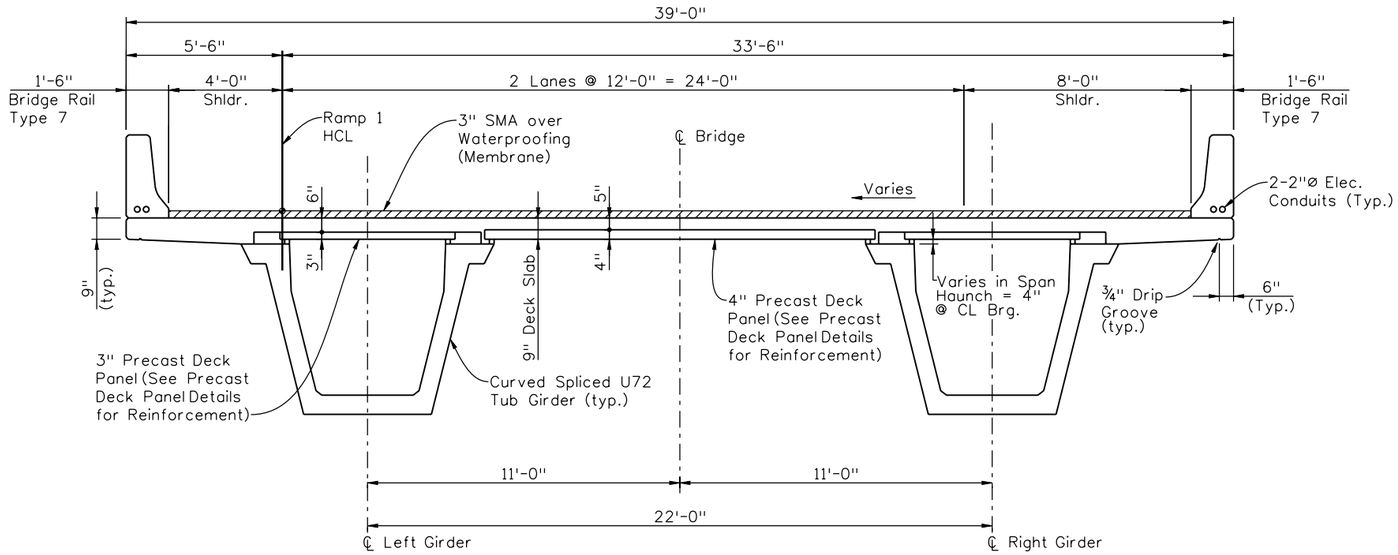

TYPICAL SECTION

(Looking Up Station)

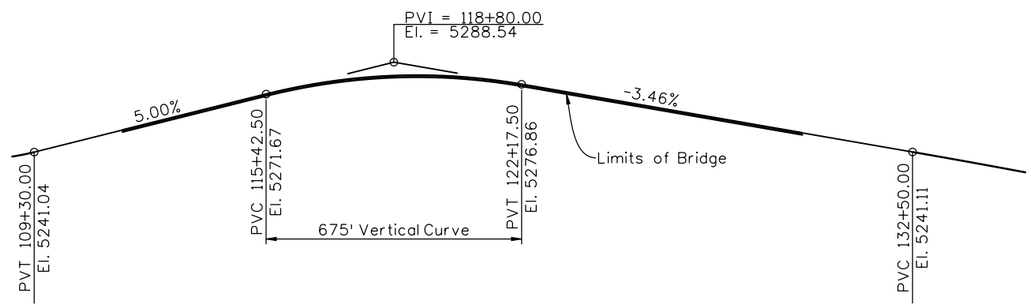

PROFILE GRADE RAMP 1

Revision Dates (Preliminary Stage Only)

Design			Detail			Quantities		
	INITIAL	DATE		INITIAL	DATE		INITIAL	DATE
Designed By	GAR	08/10	Detailed By	RAD	08/10	Quantities By		
Checked By			Checked By	GAR	10/10	Checked By		

soellner 1:45:14 PM K:\08276\16311\Phase 2\Bridge\Drawings\16311BRDG_PH2_F-16-XR_Typ.dgn
9/27/2010 CDOT-PDFDraftQuality_XM.pltcfg *

Print Date: 9/27/2010
File Name: 16311BRDG_PH2_F-16-XR_Typ.dgn
Horiz. Scale: 1:1 Vert. Scale: As Noted
Unit Information Unit Leader Initials

Summit Engineering Group, Incorporated
CONSULTING STRUCTURAL ENGINEERS
10822 Teller Drive Suite 330
Littleton, CO 80127

Sheet Revisions		
Date:	Comments	Init.

Colorado Department of Transportation
DEPARTMENT OF TRANSPORTATION
2000 South Holly Street
Denver, CO 80222
Phone: 303-972-9112 FAX: 303-972-9114
Region 6 RLB

As Constructed
No Revisions:
Revised:
Void:

I-25/SANTA FE INTERCHANGE
RAMP 1 FLYOVER
TYPICAL SECTION & PROFILE GRADE

Designer:	G. Reese	Structure Numbers	F-16-XR
Detailer:	M. Eberly		
Sheet Subset:	Bridge	Subset Sheets:	Bxx of XX

Project No./Code
IM 0254-394
16311
Sheet Number 101

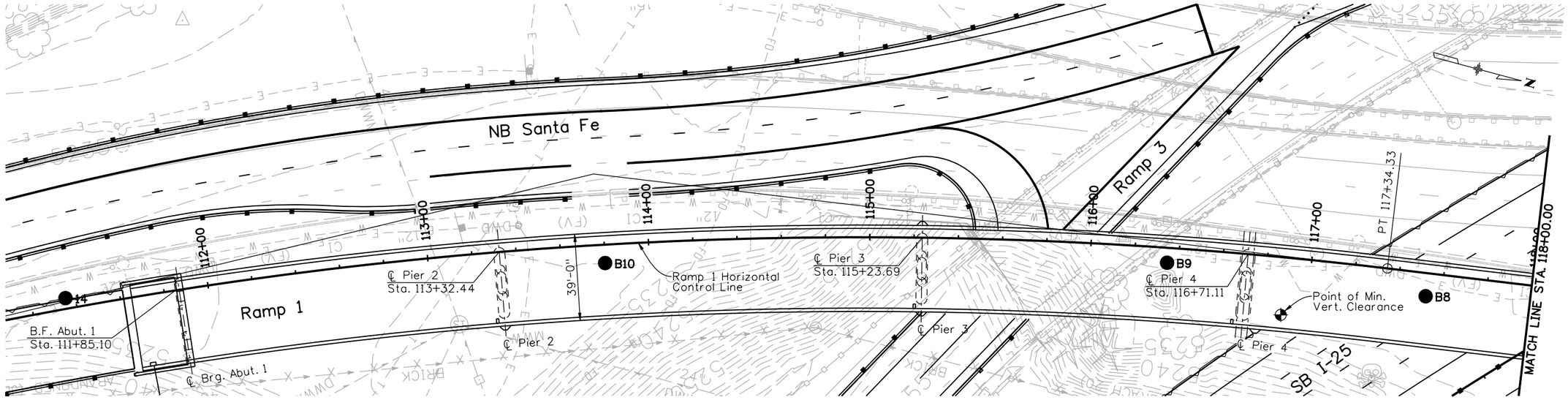

PLAN

LEGEND:

- Topsoil (TS).
- Fill:
- Sand:
- Sand and Clay:
- Sand and Gravel:
- Sandstone Bedrock:
- Sandstone and Siltstone/Claystone Bedrock:
- Siltstone/Claystone Bedrock:
- Drive sample, 2-inch I.D. California liner sample
- Drive sample, 1-3/8 inch I.D. standard sample
- Small disturbed sample
- 90% R1 — Core sample, 1.5-inch I.D. sample, indicates core run number and Rock Quality Designation (RQD) percentage.

23/12 — Drive sample blow count, indicates 23 blows of a 140-pound hammer falling 30 inches were required to drive the sampler 12 inches.

20/25/30 — Drive sample blow count, indicates 20, 25, and 30 blows of a 140-pound hammer falling 30 inches were required to drive the sampler 18 inches.

0 — Depth to water level and number of days after drilling that measurement was taken.

SEE BORING LOGS INFORMATION SHEETS FOR DETAILED DESCRIPTIONS AND LABORATORY TEST RESULTS.

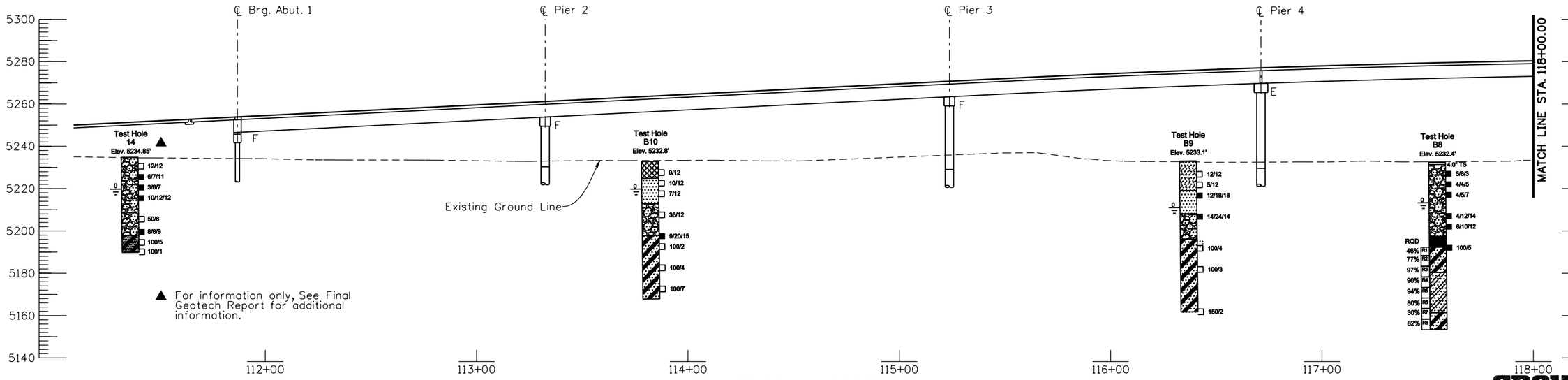

▲ For information only, See Final Geotech Report for additional information.

LONGITUDINAL SECTION

GROUND ENGINEERING CONSULTANTS

Revision Dates (Preliminary Stage Only)

Design			Detail			Quantities		
	INITIAL	DATE		INITIAL	DATE		INITIAL	DATE
Designed By	GR/PRS	08/10	Detailed By	RAD	08/10	Quantities By		
Checked By			Checked By	PRS		Checked By		

soellner 1:45:22 PM K:\08276\16311\Phase 2\Bridge\Drawings\16311BRDG_PH2_F-16-XR_EngGeology01.dgn
9/27/2010 CDOT-PDFDraftQuality_XM.pltcfg *

Print Date: 9/27/2010	
File Name: 16311BRDG_PH2_F-16-XR_EngGeology01.dgn	
Horiz. Scale: 1:50	Vert. Scale: As Noted
Unit Information	Unit Leader Initials

Summit Engineering Group, Incorporated — Consulting Structural Engineers
10822 Toller Drive Suite 330
Littleton, CO 80127

Sheet Revisions

Date:	Comments	Init.

Colorado Department of Transportation
DOT — Department of Transportation
2000 South Holly Street
Denver, CO 80222
Phone: 303-972-9112 FAX: 303-972-9114
Region 6 RLB

As Constructed	
No Revisions:	
Revised:	
Void:	

I-25/SANTA FE INTERCHANGE
RAMP 1 FLYOVER
ENGINEERING GEOLOGY (1 OF 3)

Designer:	X	Structure Numbers	F-16-XR
Detailer:	K. Soellner		
Sheet Subset:	Bridge	Subset Sheets:	B of XX

Project No./Code	
IM 0254-394	
16311	
Sheet Number	102

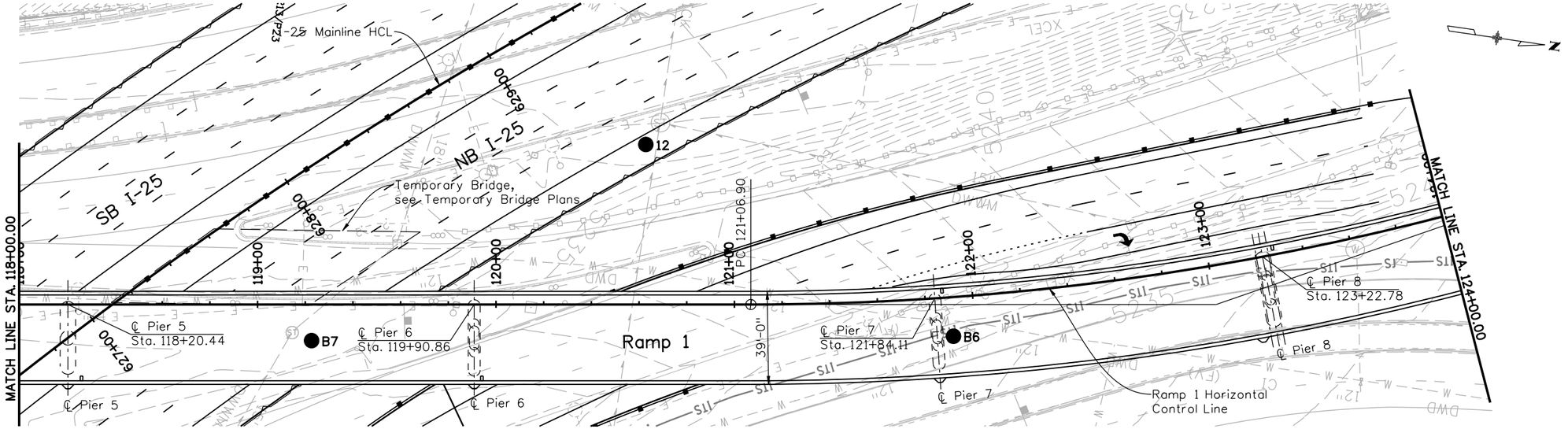

PLAN

LEGEND:

- Topsoil (TS).
- Fill:
- Sand:
- Sand and Clay:
- Sand and Gravel:
- Sandstone Bedrock:
- Sandstone and Siltstone/Claystone Bedrock:
- Siltstone/Claystone Bedrock:
- Drive sample, 2-inch I.D. California liner sample
- Drive sample, 1-3/8 inch I.D. standard sample
- Small disturbed sample
- 90% R1 — Core sample, 1.5-inch I.D. sample, indicates core run number and Rock Quality Designation (RQD) percentage.

23/12 — Drive sample blow count, indicates 23 blows of a 140-pound hammer falling 30 inches were required to drive the sampler 12 inches.

20/25/30 — Drive sample blow count, indicates 20, 25, and 30 blows of a 140-pound hammer falling 30 inches were required to drive the sampler 18 inches.

0 — Depth to water level and number of days after drilling that measurement was taken.

SEE BORING LOGS INFORMATION SHEETS FOR DETAILED DESCRIPTIONS AND LABORATORY TEST RESULTS.

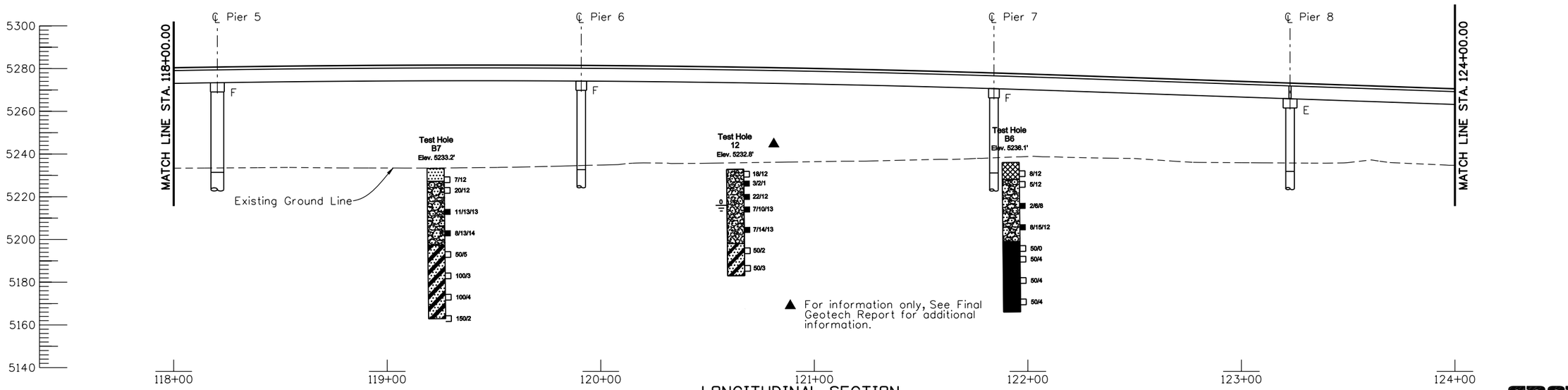

▲ For information only, See Final Geotech Report for additional information.

LONGITUDINAL SECTION
Taken at Ramp 1 HCL

GROUND ENGINEERING CONSULTANTS

Revision Dates (Preliminary Stage Only)

Design			Detail			Quantities		
	INITIAL	DATE		INITIAL	DATE		INITIAL	DATE
Designed By	GR/PRS	08/10	Detailed By	RAD	08/10	Quantities By		
Checked By			Checked By	PRS		Checked By		

Print Date: 9/27/2010	
File Name: 16311BRDG_PH2_F-16-XR_EngGeology02.dgn	
Horiz. Scale: 1:50	Vert. Scale: As Noted
Unit Information	Unit Leader Initials

Summit Engineering Group, Incorporated — Consulting Structural Engineers
10822 Toller Drive Suite 330
Littleton, CO 80127

Sheet Revisions		
Date:	Comments	Init.

Colorado Department of Transportation
2000 South Holly Street
Denver, CO 80222
Phone: 303-972-9112 FAX: 303-972-9114
Region 6 RLB

As Constructed	
No Revisions:	
Revised:	
Void:	

I-25/SANTA FE INTERCHANGE
RAMP 1 FLYOVER
ENGINEERING GEOLOGY (2 OF 3)

Designer:	x	Structure Numbers	F-16-XR
Detailer:	K. Soellner		
Sheet Subset:	Bridge	Subset Sheets:	B of XX

Project No./Code	
IM 0254-394	
16311	
Sheet Number	103

soellner 1:45:33 PM K:\08276\16311\Phase 2\Bridge\Drawings\16311BRDG_PH2_F-16-XR_EngGeology02.dgn
9/27/2010 CDOT-PDFDraftQuality_XM.pltcfg *

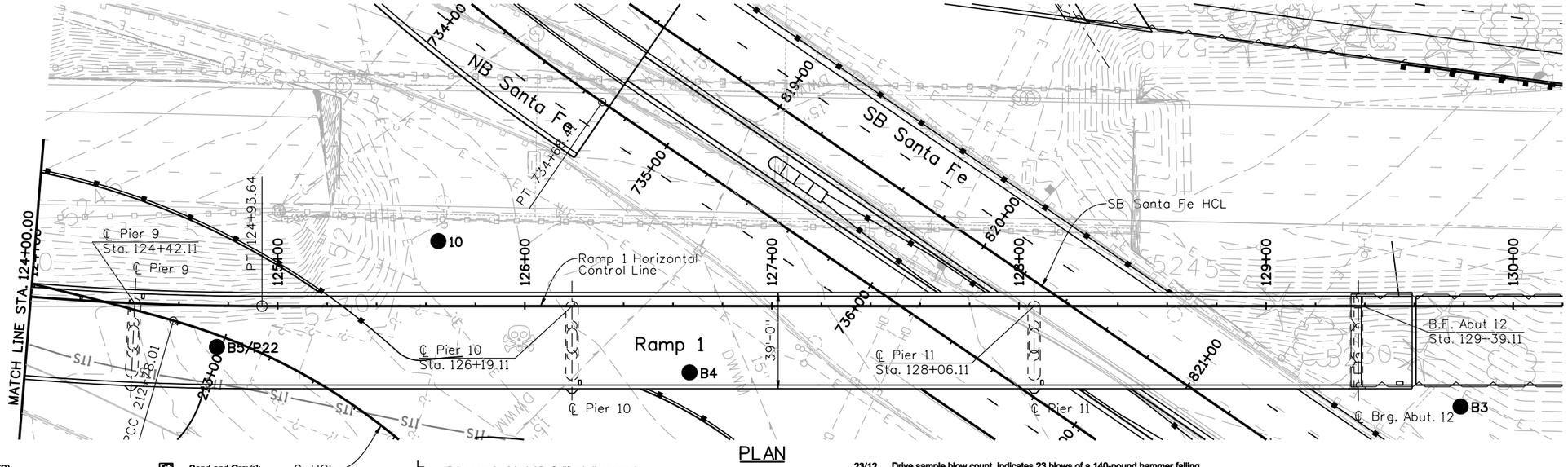

PLAN

LEGEND:

- Topsoil (TS).
- Fill:
- Sand:
- Sand and Clay:
- Sand and Gravel:
- Sandstone Bedrock:
- Sandstone and Siltstone/Claystone Bedrock:
- Siltstone/Claystone Bedrock:
- Drive sample, 2-inch I.D. California liner sample
- Drive sample, 1-3/8 inch I.D. standard sample
- Small disturbed sample
- 90% RT — Core sample, 1.5-inch I.D. sample, indicates core run number and Rock Quality Designation (RQD) percentage.

23/12 — Drive sample blow count, indicates 23 blows of a 140-pound hammer falling 30 inches were required to drive the sampler 12 inches.

20/25/30 — Drive sample blow count, indicates 20, 25, and 30 blows of a 140-pound hammer falling 30 inches were required to drive the sampler 18 inches.

0 — Depth to water level and number of days after drilling that measurement was taken.

SEE BORING LOGS INFORMATION SHEETS FOR DETAILED DESCRIPTIONS AND LABORATORY TEST RESULTS.

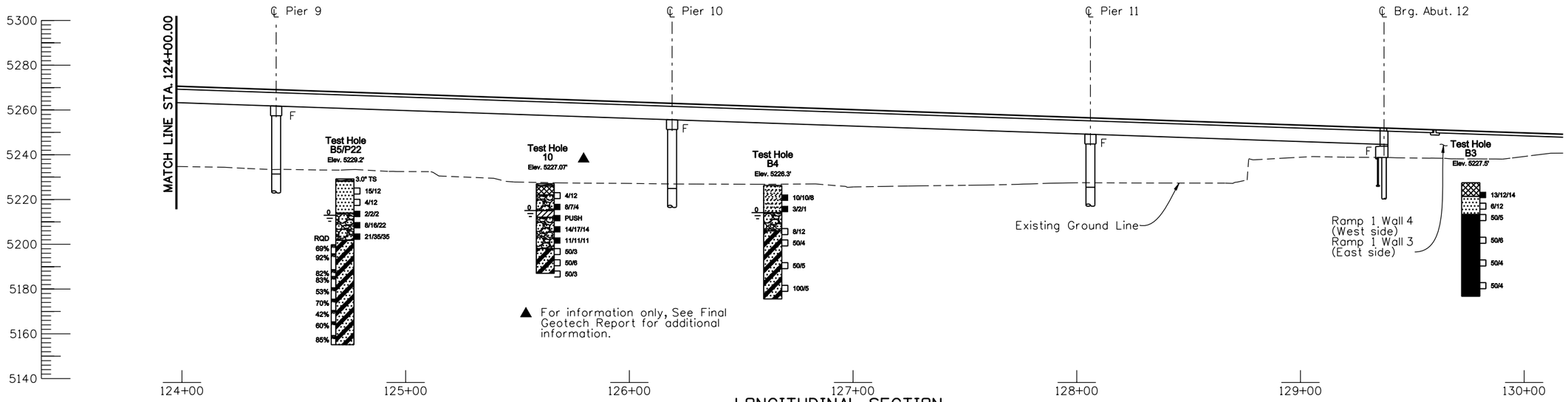

▲ For information only, See Final Geotech Report for additional information.

LONGITUDINAL SECTION
Taken at Ramp 1 HCL

Revision Dates (Preliminary Stage Only)

Design			Detail			Quantities		
	INITIAL	DATE		INITIAL	DATE		INITIAL	DATE
Designed By	GR/PRS	08/10	Detailed By	RAD	08/10	Quantities By		
Checked By			Checked By	PRS		Checked By		

soellner 1:45:40 PM K:\08276\16311\Phase 2\Bridge\Drawings\16311BRDG_PH2_F-16-XR_EngGeology03.dgn
9/27/2010 CDOT-PDFDraftQuality_XM.pltcfg *

Print Date: 9/27/2010
File Name: 16311BRDG_PH2_F-16-XR_EngGeology03.dgn
Horiz. Scale: 1:50 Vert. Scale: As Noted
Unit Information Unit Leader Initials

Summit Engineering Group, Incorporated — Consulting Structural Engineers
10822 Toller Drive Suite 330
Littleton, CO 80127

Sheet Revisions

Date:	Comments	Init.

Colorado Department of Transportation
DOT — Department of Transportation
2000 South Holly Street
Denver, CO 80222
Phone: 303-972-9112 FAX: 303-972-9114
Region 6 RLB

As Constructed
No Revisions:
Revised:
Void:

I-25/SANTA FE INTERCHANGE
RAMP 1 FLYOVER
ENGINEERING GEOLOGY (3 OF 3)

Designer: X
Detailer: K. Soellner
Sheet Subset: Bridge
Structure Numbers: F-16-XR
Subset Sheets: B of XX

GROUND ENGINEERING CONSULTANTS

Project No./Code
IM 0254-394
16311
Sheet Number 104

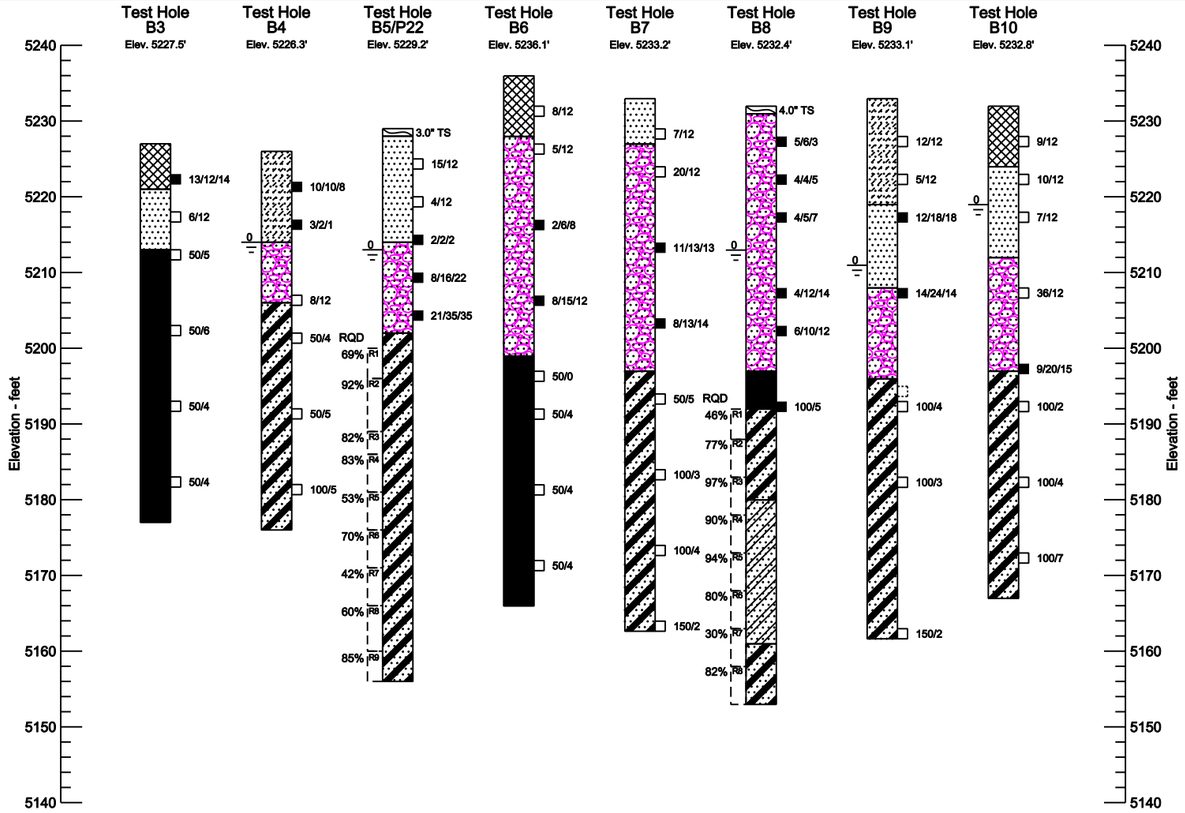

SUMMARY OF TEST RESULTS

Sample Number	Depth (feet)	Classification: Corps of Engrs. or Visual (Soil or Bedrock Types)	Classification: AASHTO	Grading Analysis (AASHTO) Percent: Gravel	Sand	Silt and Clay	Atterberg Limits: L.L. L_W	P.L. P_W	P.I. I_W	Water Content W %	Unconfined Compressive Strength (psf)
B3	4	Fill: Sandy Silt	A-4(3)	0	36	64	33	27	6	17.6	–
B3	9	Clayey Sand	A-4(10)	–	–	38	24	15	9	17.7	–
B3	24	Sandy Claystone	A-6(12)	–	–	84	39	25	14	20.4	–
B3	34	Sandy Siltstone	A-4(7)	–	–	71	37	27	10	32.3	880
B4	4	Very Clayey Sand	A-4(0)	0	57	43	25	18	7	6.6	–
B4	19	Gravelly Sand	A-2-4(0)	18	77	5	NV	–	NP	8.7	–
B4	29	Sandstone/Siltstone	A-4(1)	–	–	53	38	34	4	22.6	–
B4	44	Very Sandy Siltstone	A-5(4)	–	–	59	43	35	8	20.6	25,720
B5/P22	4	Silty Sand	A-4(0)	0	61	39	19	14	5	11.5	–
B5/P22	19	Gravelly Sand	A-1-b(0)	26	69	5	NV	–	NP	8.1	–
B5/P22	31–32	Sandstone/Siltstone	A-4(3)	–	–	53	40	32	8	14.4	351,843
B5/P22	54–55	Sandy Siltstone	A-5(8)	–	–	85	43	37	6	20.4	83,039
B5/P22	61–71	Sandy Siltstone	A-7-5(17)	–	–	89	51	36	15	18.6	166,078
B6	9	Gravelly Sand	A-1-b(0)	13	77	10	NV	–	NP	11.1	–
B6	29	Gravelly Sand	A-1-b(0)	17	74	9	NV	–	NP	9.7	–
B6	44	Sandy Siltstone	A-7-5(15)	–	–	80	51	35	16	24.1	7,360
B6	54	Sandy Siltstone	A-7-5(10)	–	–	78	46	35	11	18.6	–
B6	64	Siltstone	A-7-5(24)	–	–	97	53	34	19	20.5	9,840
B7	4	Silty Sand	A-2-4(0)	–	–	13	NV	–	NP	7.1	–
B7	9	Gravelly Sand	A-2-4(0)	–	–	2	NV	–	NP	3.8	–
B7	19	Gravelly Sand	A-1-b(0)	28	66	6	NV	–	NP	8.4	–
B7	39	Silty Sandstone	A-2-6(0)	–	–	19	38	25	13	25.8	11,840
B7	49	Silty Sandstone	A-2-4(0)	–	–	30	25	21	4	13.4	–

NV = Non-viscous NP = Non-plastic

SUMMARY OF TEST RESULTS

Sample Number	Depth (feet)	Classification: Corps of Engrs. or Visual (Soil or Bedrock Types)	Classification: AASHTO	Grading Analysis (AASHTO) Percent: Gravel	Sand	Silt and Clay	Atterberg Limits: L.L. L_W	P.L. P_W	P.I. I_W	Water Content W %	Unconfined Compressive Strength (psf)
B8	14	Gravelly Sand	A-1-b(0)	14	80	6	NV	–	NP	2.7	–
B8	29	Gravelly Sand	A-1-b(0)	10	85	5	NV	–	NP	11.5	–
B8	56–57	Silty Sandstone	A-2-4(0)	–	–	17	NV	–	NP	11.5	224,206
B8	61–62	Silty Sandstone	A-2-4(0)	–	–	16	35	27	8	12.6	246,056
B8	73.5–74.5	Sandy Siltstone	A-7-5(14)	–	–	73	45	31	14	15.4	252,041
B9	5	Silty Sand	A-2-4(0)	0	72	28	NV	–	NP	8.6	–
B9	10	Sandy Clay	A-4(3)	0	12	88	20	13	7	10.0	–
B9	15	Gravelly Sand	A-1-b(0)	23	71	6	NV	–	NP	15.6	–
B9	38	Gravelly Sandstone	A-2-4(0)	26	66	8	15	12	3	10.9	–
B9	40	Silty Sandstone	A-2-4(0)	–	–	32	39	29	10	20.5	–
B10	9	Gravelly Sand	A-1-b(0)	29	68	3	NV	–	NP	1.5	–
B10	24	Gravelly Sand	A-1-b(0)	38	56	6	NV	–	NP	11.5	–
B10	34	Sand and Gravel	A-1-a(0)	46	48	6	NV	–	NP	8.0	–
B10	49	Sandy Siltstone	A-4(7)	–	–	82	36	28	8	16.6	–
B10	59	Silty Sandstone	A-7-5(2)	–	–	40	47	32	15	22.7	24,750

LEGEND:

- Topsoil (TS).
- Hot Bituminous Asphalt Pavement (HBAP).
- Fill: Clayey, silty, gravelly sand to sand and clay/silt, occasional deleterious material and debris, non-plastic to highly plastic, fine to coarse grained with gravels, very loose to very dense, slightly moist to moist, tan, light brown, dark brown.
- Sand: Silty to clayey, fine to coarse grained, occasional gravels, non-plastic to medium plastic, very loose to dense, slightly moist to wet, light brown, dark brown, tan, black, orange brown.
- Sand and Clay: Interlayered, very clayey or silty sand to very sandy clay, fine to coarse grained, occasional gravels, non-plastic to medium plastic, soft to very stiff or very loose to dense, slightly moist to wet, light brown, dark brown, orange brown, gray.
- Sand and Gravel: Occasionally silty, fine to coarse grained with gravels and cobbles, non-plastic to medium plastic, very loose to very dense, slightly moist to wet, tan, pink, brown, orange brown, black, occasionally iron stained.
- Sandstone and Siltstone/Claystone Bedrock: Interbedded, fine to coarse grained, non-plastic to highly plastic, medium hard to very hard, slightly moist to wet, brown, gray, blue gray, blue brown, green gray, blue gray, occasionally iron stained.
- Sandstone Bedrock: Slightly to very silty, fine to medium to coarse, non to low to moderate plastic, dense to very dense, slightly to highly cemented, slightly to very moist, and pale brown to brown to blue in color.
- Siltstone/Claystone Bedrock: Sandy and fine grained, hard to very hard, slightly moist to moist, low to highly plastic, gray, brown, dark brown.

Drive sample, 2-inch I.D. California liner sample | Drive sample, 1-3/8 inch I.D. standard sample

Small disturbed sample

90% R1 — Core sample, 1.5-inch I.D. sample, indicates core run number and Rock Quality Designation (RQD) percentage.

23/12 — Drive sample blow count, indicates 23 blows of a 140-pound hammer falling 30 inches were required to drive the sampler 12 inches.

20/25/30 — Drive sample blow count, indicates 20, 25, and 30 blows of a 140-pound hammer falling 30 inches were required to drive the sampler 18 inches.

0 — Depth to water level and number of days after drilling that measurement was taken.

NOTES:

1) Test holes were drilled from 01/26/09 to 02/26/09 and from 06/04/09 to 06/19/09 with 7-inch diameter hollow stem or 4-inch diameter continuous flight power augers.
2) Locations of the test holes were surveyed by the Owner's representative after completion of the test hole drilling.
3) Elevations of the test holes were surveyed by the Owner's representative and the logs of the test holes are drawn to elevation.
4) The test hole locations and elevations should be considered accurate only to the degree implied by the method used.
5) The lines between materials shown on the test hole logs represent the approximate boundaries between material types and the transitions may be gradual.
6) Groundwater level readings shown on the logs were made at the time and under the conditions indicated. Fluctuations in the water level may occur with time.
7) Thicknesses of topsoil, HBAP and road base were generally drawn to 1 foot due to the test hole log scale. Actual thickness can vary.
8) The material descriptions on this legend are for general classification purposes only. See the full text of this report for descriptions of the site materials and related recommendations.
9) Location of test holes are shown in the "Subsurface Exploration and Geotechnical Recommendations for Phase1 (Stage 1.2-1.4) and Phase 2, Task Order No.17, CDOT Project No. 0252-394, Project Code No. 16311", Dated October 26, 2009.

GROUND ENGINEERING CONSULTANTS

Revision Dates (Preliminary Stage Only)

Design	INITIAL	DATE
Designed By		
Checked By		
Detail		
Detailed By		
Checked By		
Quantities		
Quantities By		
Checked By		

Print Date: 9/27/2010
File Name: 16311BRDG_PH2_F-16-XR_EngGeology04.dgn
Horiz. Scale: 1:40 Vert. Scale: As Noted
Unit Information Unit Leader Initials

Summit Engineering Group, Incorporated — Consulting Structural Engineers
10822 Toller Drive Suite 330
Littleton, CO 80127

Sheet Revisions

Date:	Comments	Init.

Colorado Department of Transportation
DOT — Department of Transportation
2000 South Holly Street
Denver, CO 80222
Phone: 303-972-9112 FAX: 303-972-9114
Region 6 RLB

As Constructed
No Revisions:
Revised:
Void:

I-25/SANTA FE INTERCHANGE
RAMP 1 FLYOVER
BORING LOG INFORMATION

Designer: H.H.Chaing
Detailer: H.Siders
Sheet Subset: Bridge
Structure Numbers: F-16-XU
Subset Sheets: Bxx of x

Project No./Code: IM 0254-394
16311
Sheet Number 105

soeliner 1:45:47 PM K:\08276\16311\Phase 2\Bridge\Drawings\16311BRDG_PH2_F-16-XR_EngGeology04.dgn
9/27/2010 CDOT-PDFDraftQuality_XM.pltcfg *

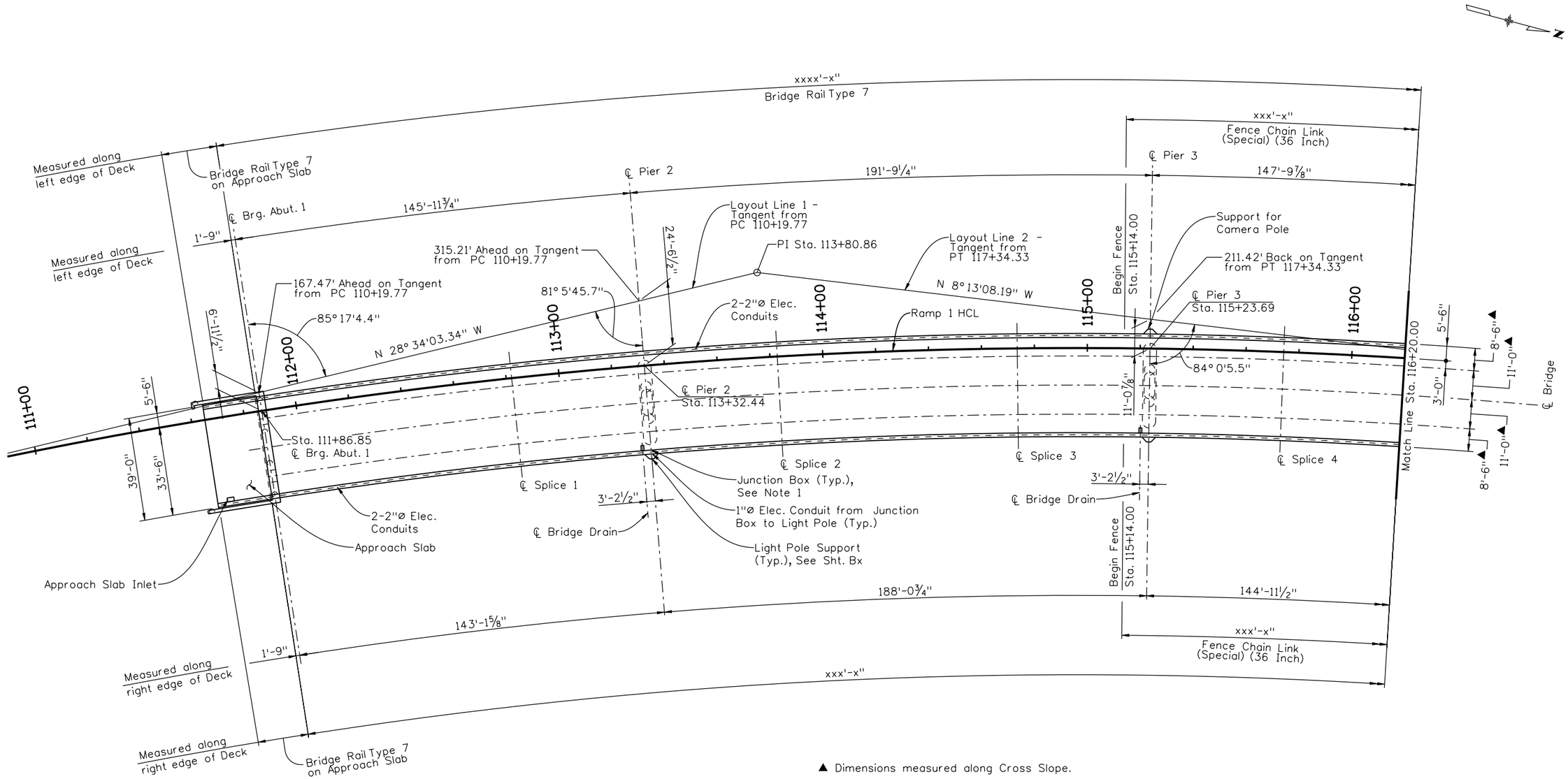

▲ Dimensions measured along Cross Slope.

NOTE:

1. Provide Junction Box with watertight cover in face of Bridge Rail. Paint to match Concrete Stain. Junction Boxes will not be paid for separately, but shall be included in the cost of Item - 2 Inch Electrical Conduit.

Design	INITIAL	DATE
Designed By	GR/PRS	08/10
Checked By		

Detail	INITIAL	DATE
Detailed By	RAD	08/10
Checked By	PRS	

Quantities	INITIAL	DATE
Quantities By		
Checked By		

Revision Dates (Preliminary Stage Only)

soellner 1:45:58 PM K:\08276\16311\Phase 2\Bridge\Drawings\16311BRDG_PH2_F-16-XR_ConstLay01.dgn
9/27/2010 CDOT-PDFDraftQuality_XM.pltcfg *

Print Date: 9/27/2010
File Name: 16311BRDG_PH2_F-16-XR_ConstLay01.dgn
Horiz. Scale: 1:40 Vert. Scale: As Noted
Unit Information Unit Leader Initials

Summit Engineering Group, Incorporated
Consulting Structural Engineers
10822 Teller Drive Suite 330
Littleton, CO 80127

Sheet Revisions		
Date:	Comments	Init.

Colorado Department of Transportation
DOT Department of Transportation
2000 South Holly Street
Denver, CO 80222
Phone: 303-972-9112 FAX: 303-972-9114
Region 6 RLB

As Constructed	
No Revisions:	
Revised:	
Void:	

I-25/SANTA FE INTERCHANGE
RAMP 1 FLYOVER
CONSTRUCTION LAYOUT (1 OF 4)

Designer:	G. Reese	Structure Numbers	F-16-XR
Detailer:	R. Dillon		
Sheet Subset:	Bridge	Subset Sheets:	B of XX

Project No./Code	
IM 0254-394	
16311	
Sheet Number	106

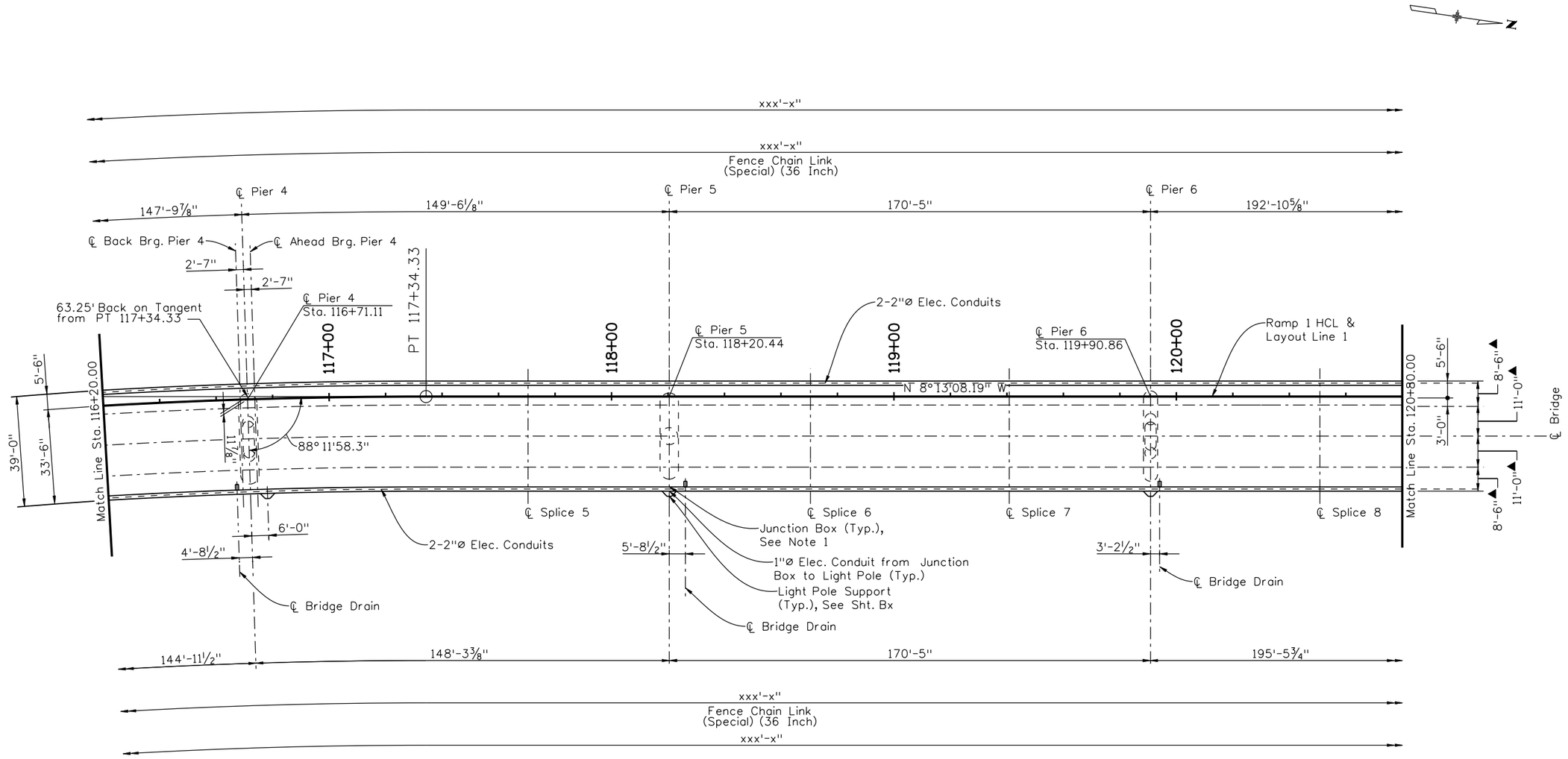

▲ Dimensions measured along Cross Slope.

NOTE:

Provide Junction Box with watertight cover in face of Bridge Rail. Paint to match Concrete Stain. Junction Boxes will not be paid for separately, but shall be included in the cost of Item - 2 Inch Electrical Conduit.

Design	INITIAL	DATE
Designed By	GR/PRS	08/10
Checked By		

Detail	INITIAL	DATE
Detailed By	RAD	08/10
Checked By	PRS	

Quantities	INITIAL	DATE
Quantities By		
Checked By		

Revision Dates (Preliminary Stage Only)

Print Date: 9/27/2010
File Name: 16311BRDG_PH2_F-16-XR_ConstLay02.dgn
Horiz. Scale: 1:40 Vert. Scale: As Noted
Unit Information Unit Leader Initials

Summit Engineering Group, Incorporated
Consulting Structural Engineers
10822 Toller Drive Suite 330
Littleton, CO 80127

Sheet Revisions		
Date:	Comments	Init.

Colorado Department of Transportation
DOT DEPARTMENT OF TRANSPORTATION
2000 South Holly Street
Denver, CO 80222
Phone: 303-972-9112 FAX: 303-972-9114
Region 6 RLB

As Constructed	
No Revisions:	
Revised:	
Void:	

I-25/SANTA FE INTERCHANGE RAMP 1 FLYOVER CONSTRUCTION LAYOUT (2 OF 4)

Designer:	G. Reese	Structure Numbers	F-16-XR
Detailer:	R. Dillon		
Sheet Subset:	Bridge	Subset Sheets:	B of XX

Project No./Code
IM 0254-394
16311
Sheet Number 107

soeliner 1:46:02 PM K:\08276\16311\Phase 2\Bridge\Drawings\16311BRDG_PH2_F-16-XR_ConstLay02.dgn
9/27/2010 CDOT-PDFDraftQuality_XM.pltcfg *

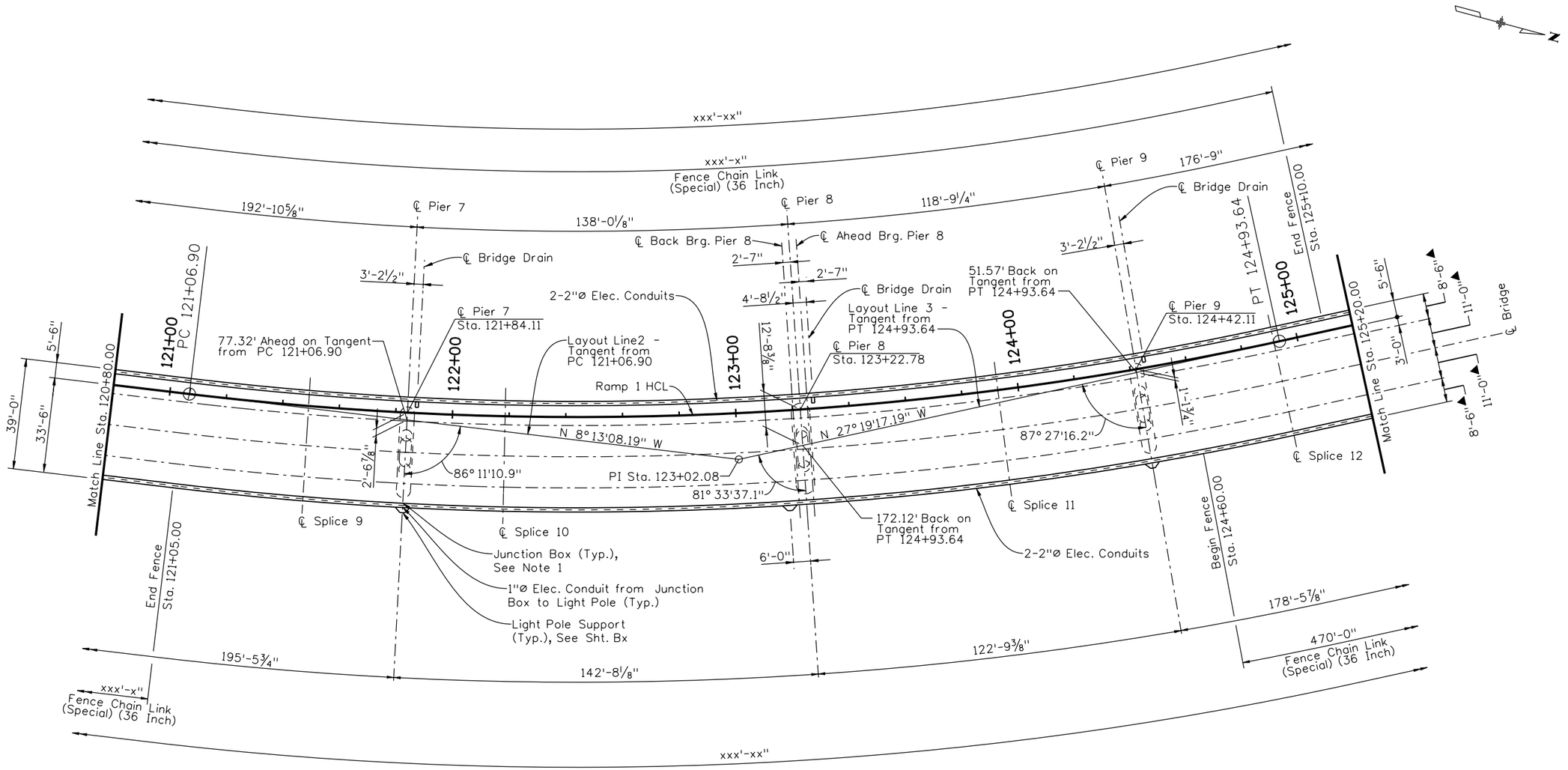

▲ Dimensions measured along Cross Slope.

NOTE:

Provide Junction Box with watertight cover in face of Bridge Rail. Paint to match Concrete Stain. Junction Boxes will not be paid for separately, but shall be included in the cost of Item - 2 Inch Electrical Conduit.

Design			Detail			Quantities		
	INITIAL	DATE		INITIAL	DATE		INITIAL	DATE
Designed By	GR/PRS	08/10	Detailed By	RAD	08/10	Quantities By		
Checked By			Checked By	PRS		Checked By		

Revision Dates (Preliminary Stage Only)

soellner 1:46:06 PM K:\08276\16311\Phase 2\Bridge\Drawings\16311BRDG_PH2_F-16-XR_ConstLay03.dgn
9/27/2010 CDOT-PDFDraftQuality_XM.pltcfg *

Print Date: 9/27/2010
File Name: 16311BRDG_PH2_F-16-XR_ConstLay03.dgn
Horiz. Scale: 1:40 Vert. Scale: As Noted
Unit Information Unit Leader Initials

Summit Engineering Group, Incorporated Consulting Structural Engineers
10822 Toller Drive Suite 330
Littleton, CO 80127

Sheet Revisions		
Date:	Comments	Init.

Colorado Department of Transportation
DOT Department of Transportation
2000 South Holly Street
Denver, CO 80222
Phone: 303-972-9112 FAX: 303-972-9114
Region 6 RLB

As Constructed
No Revisions:
Revised:
Void:

I-25/SANTA FE INTERCHANGE
RAMP 1 FLYOVER
CONSTRUCTION LAYOUT (3 OF 4)

Designer:	G. Reese	Structure Numbers	F-16-XR
Detailer:	R. Dillon		
Sheet Subset:	Bridge	Subset Sheets:	B of XX

Project No./Code
IM 0254-394
16311
Sheet Number 108

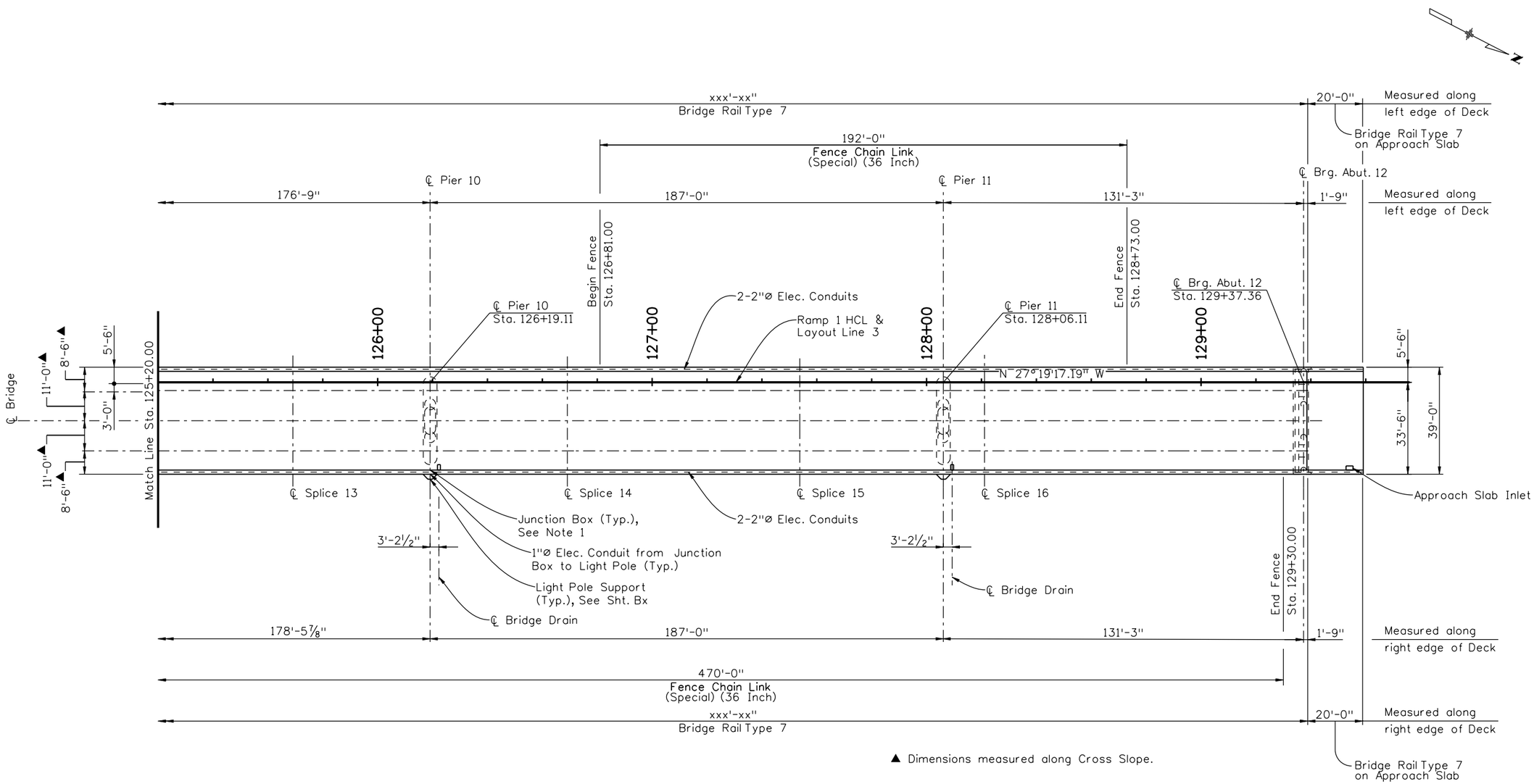

▲ Dimensions measured along Cross Slope.

NOTE:

Provide Junction Box with watertight cover in face of Bridge Rail. Paint to match Concrete Stain. Junction Boxes will not be paid for separately, but shall be included in the cost of Item - 2 Inch Electrical Conduit.

Design	INITIAL	DATE
Designed By	GR/PRS	08/10
Checked By		

Detail	INITIAL	DATE
Detailed By	RAD	08/10
Checked By	PRS	

Quantities	INITIAL	DATE
Quantities By		
Checked By		

Revision Dates (Preliminary Stage Only)

Print Date: 9/27/2010	
File Name: 16311BRDG_PH2_F-16-XR_ConstLay04.dgn	
Horiz. Scale: 1:40	Vert. Scale: As Noted
Unit Information	Unit Leader Initials

Summit Engineering Group, Incorporated
Consulting Structural Engineers
10822 Toller Drive Suite 330
Littleton, CO 80127

Sheet Revisions		
Date:	Comments	Init.

Colorado Department of Transportation
DOT — Department of Transportation
2000 South Holly Street
Denver, CO 80222
Phone: 303-972-9112 FAX: 303-972-9114
Region 6 RLB

As Constructed	
No Revisions:	
Revised:	
Void:	

I-25/SANTA FE INTERCHANGE
RAMP 1 FLYOVER
CONSTRUCTION LAYOUT (4 OF 4)

Designer:	G. Reese	Structure Numbers	F-16-XR
Detailer:	R. Dillon		
Sheet Subset:	Bridge	Subset Sheets:	B of XX

Project No./Code	
IM 0254-394	
16311	
Sheet Number	109

soellner 1:46:11 PM K:\08276\16311\Phase 2\Bridge\Drawings\16311BRDG_PH2_F-16-XR_ConstLay04.dgn
9/27/2010 CDOT-PDFDraftQuality_XM.pltcfg *

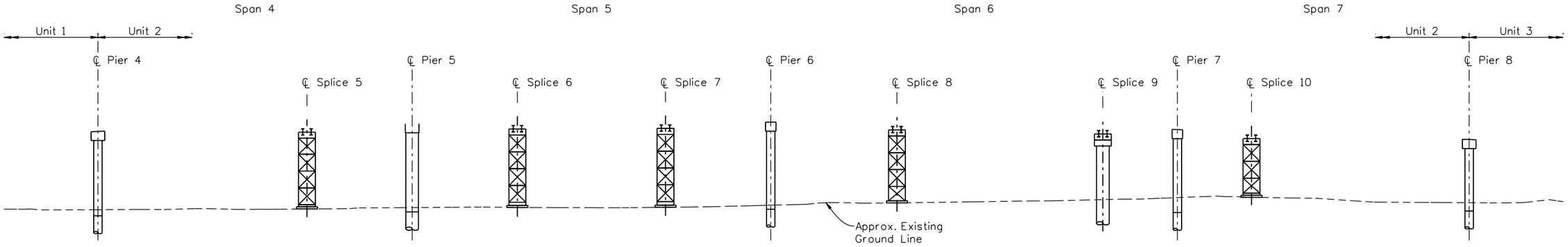

UNIT 2 - PHASE 1

PHASE 1
SEQUENCE OF OPERATIONS

1. Construct foundations and piers.
2. Stress and grout bottom flange pt in precast girders prior to erecting.
3. Strees and grout pt in Pier 8 lower cap.
4. Erect shoring towers.

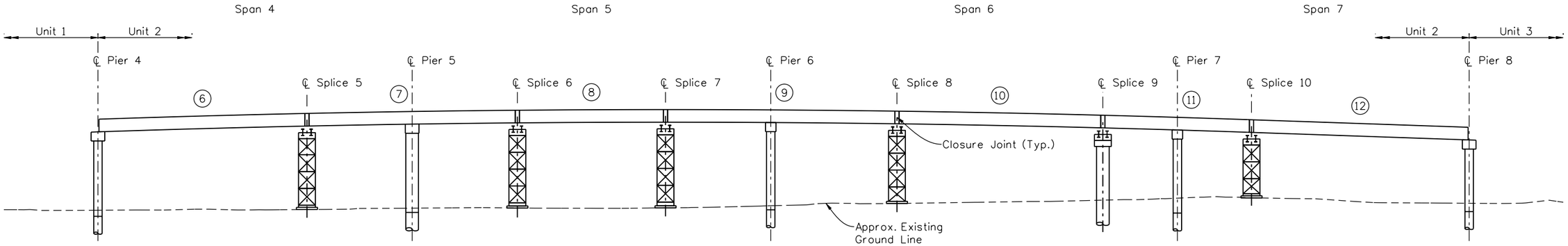

UNIT 2 - PHASE 2

PHASE 2
SEQUENCE OF OPERATIONS

1. Erect segments 6 through 12 in Unit 2. Pier girders are not set on interior piers. Girders 6L, 6R, 12L & 12R are set on permanent bearings at Piers 4 and 8.
2. Brace curved segments to falsework prior to releasing from cranes.
3. Cast closures at ends of segments, diaphragms over interior piers and diaphragms at Expansion Piers 4 and 8.
4. A maximum of 50psf construction live load is allowed on segments prior to casting diaphragms.
5. Set and grout all precast deck panels from Pier 4 to Pier 8. Panels may be set after all diaphragms reach 4000psi concrete strength.
6. Stress and grout pt in interior piers.

Revision Dates (Preliminary Stage Only)

Design	INITIAL	DATE	Detail	INITIAL	DATE	Quantities	INITIAL	DATE
Designed By			Detailed By	KJS	08/10	Quantities By		
Checked By			Checked By			Checked By		

soellner 1:46:14 PM K:\08276\16311\Phase 2\Bridge\Drawings\16311BRDG_PH2_F-16-XR_ErectSeq01.dgn
9/27/2010 CDOT-PDFDraftQuality_XM.pltcfg *

Print Date: 9/27/2010	
File Name: 16311BRDG_PH2_F-16-XR_ErectSeq01.dgn	
Horiz. Scale: 1:50	Vert. Scale: As Noted
Unit Information	Unit Leader Initials

Summit Engineering Group, Incorporated
Consulting Structural Engineers
10822 Teller Drive Suite 330
Littleton, CO 80127

Sheet Revisions		
Date:	Comments	Init.

Colorado Department of Transportation
DOT Department of Transportation
2000 South Holly Street
Denver, CO 80222
Phone: 303-972-9112 FAX: 303-972-9114
Region 6 RLB

As Constructed	
No Revisions:	
Revised:	
Void:	

I-25/SANTA FE INTERCHANGE
RAMP 1 FLYOVER
UNIT 2 ERECTION SEQUENCE (1 OF 2)

Designer:	G. Reese	Structure Numbers	F-16-XR
Detailer:	K. Soellner		
Sheet Subset:	Bridge	Subset Sheets:	B of XX

Project No./Code	
IM 0254-394	
16311	
Sheet Number	110

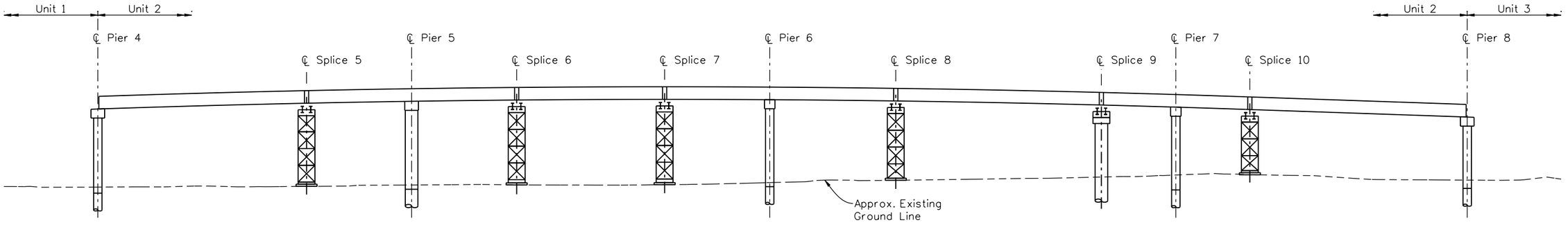

UNIT 2 - PHASE 3

PHASE 3
SEQUENCE OF OPERATIONS

1. Stress continuity tendons 1 to 4.

PHASE 3
STRESSING PROCEDURES

1. Stress continuity tendon 1 from Pier 4 to Pier 8. Stress tendon on outside of curve to 50% Pjack, then stress tendon on inside of curve to 100% Pjack, then stress tendon on outside of curve to 100% Pjack.
2. Stress continuity tendon 2 from Pier 4 to Pier 8 similarly to tendon 1.
3. Stress continuity tendon 3 from Pier 4 to Pier 8 similarly to tendon 1.
4. Stress continuity tendon 4 from Pier 4 to Pier 8 similarly to tendon 1.

TENDON Pjack

Pjack = 527kips for tendons 1, 2, 3 & 4

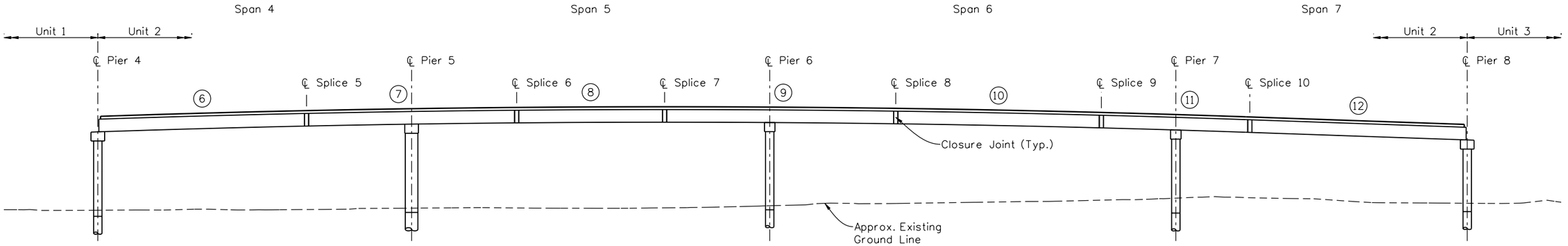

UNIT 2 - PHASE 4

PHASE 4
SEQUENCE OF OPERATIONS

1. Grout all tendons after stressing is complete.
2. Remove falsework.
3. Form and cast deck slab.
4. Install expansion joints.
5. Cast barrier rails.

(Preliminary Stage Only)

Revision Dates

Design	INITIAL	DATE
Designed By		
Checked By		

Detail	INITIAL	DATE
Detailed By	KJS	08/10
Checked By		

Quantities	INITIAL	DATE
Quantities By		
Checked By		

soellner 1:46:17 PM K:\08276\16311\Phase 2\Bridge\Drawings\16311BRDG_PH2_F-16-XR_ErectSeq01a.dgn
9/27/2010 CDOT-PDFDraftQuality_XM.pltcfg *

Print Date: 9/27/2010
File Name: 16311BRDG_PH2_F-16-XR_ErectSeq01a.dgn
Horiz. Scale: 1:50 Vert. Scale: As Noted
Unit Information Unit Leader Initials

Summit Engineering Group, Incorporated
Consulting Structural Engineers
10822 Teller Drive Suite 330
Littleton, CO 80127

Sheet Revisions

Date:	Comments	Init.

Colorado Department of Transportation
DOT Department of Transportation
2000 South Holly Street
Denver, CO 80222
Phone: 303-972-9112 FAX: 303-972-9114
Region 6 RLB

As Constructed
No Revisions:
Revised:
Void:

I-25/SANTA FE INTERCHANGE
RAMP 1 FLYOVER
UNIT 2 ERECTION SEQUENCE (2 OF 2)

Designer: G. Reese
Detailer: K. Soellner
Sheet Subset: Bridge
Structure Numbers: F-16-XR
Subset Sheets: B of XX

Project No./Code
IM 0254-394
16311
Sheet Number 111

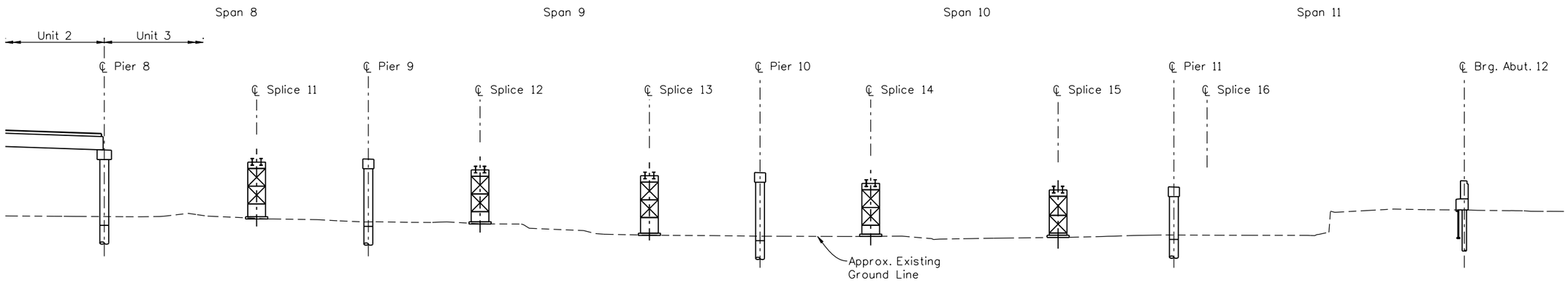

UNIT 3 - PHASE 1

PHASE 1
SEQUENCE OF OPERATIONS

1. Construct foundations, abutments and piers.
2. Stress and grout bottom flange pt in precast girders prior to erecting.
3. Erect shoring towers.

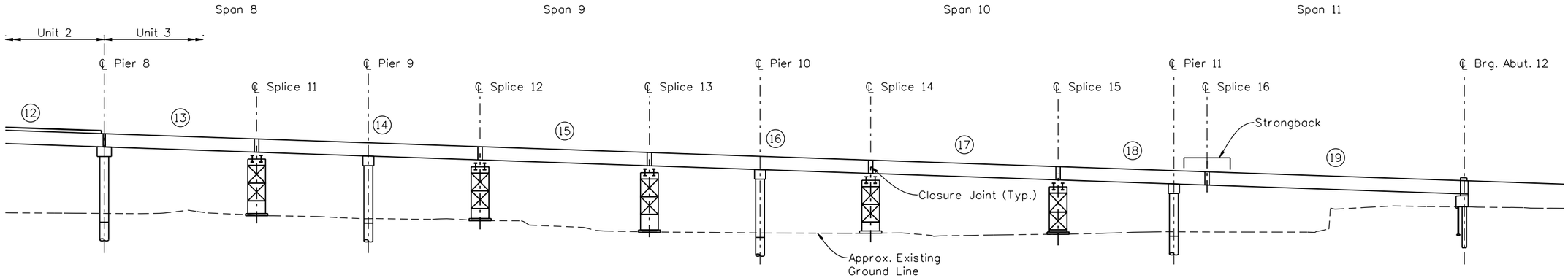

UNIT 3 - PHASE 2

PHASE 2
SEQUENCE OF OPERATIONS

1. Erect segments 13 through 19 in Unit 3. Pier girders are not set on interior piers. Girders 13L & 13R are set on permanent bearings at Pier 8. Girders 19L & 19R are set on bearing pads at Abutment 12.
2. Brace curved segments to falsework prior to releasing from cranes.
3. Cast closures at ends of segments, diaphragms over interior piers and diaphragms at Expansion Pier 8 and Abutment 12.
4. A maximum of 50psf construction live load is allowed on segments prior to casting diaphragms.
5. Set and grout all precast deck panels from Pier 8 to Abutment 12. Panels may be set after all diaphragms reach 4000psi concrete strength.
6. Stress and grout pt in interior piers.

Revision Dates (Preliminary Stage Only)

Design	INITIAL	DATE
Designed By		
Checked By		

Detail	INITIAL	DATE
Detailed By	KJS	08/10
Checked By		

Quantities	INITIAL	DATE
Quantities By		
Checked By		

soellner 1:46:21 PM K:\08276\16311\Phase 2\Bridge\Drawings\16311BRDG_PH2_F-16-XR_ErectSeq02.dgn
9/27/2010 CDOT-PDFDraftQuality_XM.pltcfg *

Print Date: 9/27/2010
File Name: 16311BRDG_PH2_F-16-XR_ErectSeq02.dgn
Horiz. Scale: 1:50 Vert. Scale: As Noted
Unit Information Unit Leader Initials

Summit Engineering Group, Incorporated
Consulting Structural Engineers
10822 Toller Drive Suite 330
Littleton, CO 80127

Sheet Revisions

Date:	Comments	Init.

Colorado Department of Transportation
DOT Department of Transportation
2000 South Holly Street
Denver, CO 80222
Phone: 303-972-9112 FAX: 303-972-9114
Region 6 RLB

As Constructed
No Revisions:
Revised:
Void:

I-25/SANTA FE INTERCHANGE
RAMP 1 FLYOVER
UNIT 3 ERECTION SEQUENCE (1 OF 2)

Designer:	G. Reese	Structure Numbers	F-16-XR
Detailer:	K. Soellner		
Sheet Subset:	Bridge	Subset Sheets:	B of XX

Project No./Code
IM 0254-394
16311
Sheet Number 112

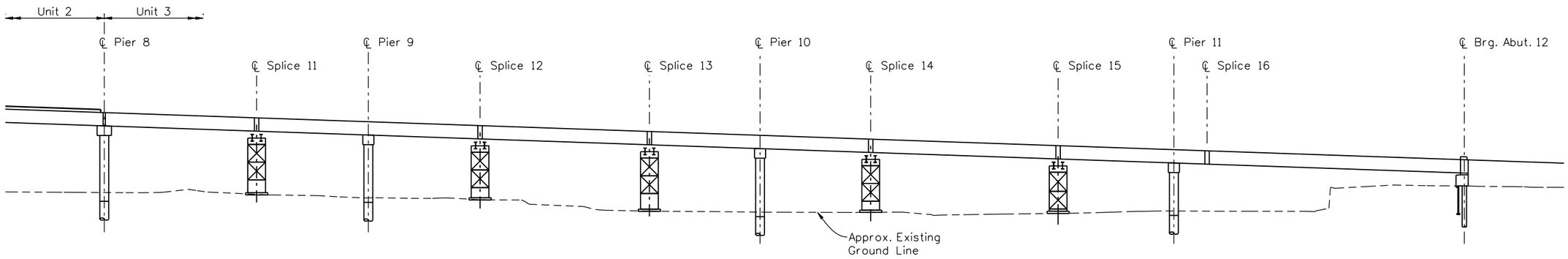

UNIT 3 - PHASE 3

PHASE 3
SEQUENCE OF OPERATIONS

1. Stress continuity tendons 1 to 4.

PHASE 3
STRESSING PROCEDURES

1. Stress continuity tendon 1 from Pier 8 to Abutment 12. Stress tendon on outside of curve to 50% Pjack, then stress tendon on inside of curve to 100% Pjack, then stress tendon on outside of curve to 100% Pjack.
2. Stress continuity tendon 2 from Pier 8 to Abutment 12 similarly to tendon 1.
3. Stress continuity tendon 3 from Pier 8 to Abutment 12 similarly to tendon 1.
4. Stress continuity tendon 4 from Pier 8 to Abutment 12 similarly to tendon 1.

TENDON Pjack

Pjack = 527kips for tendons 1, 2, 3 & 4

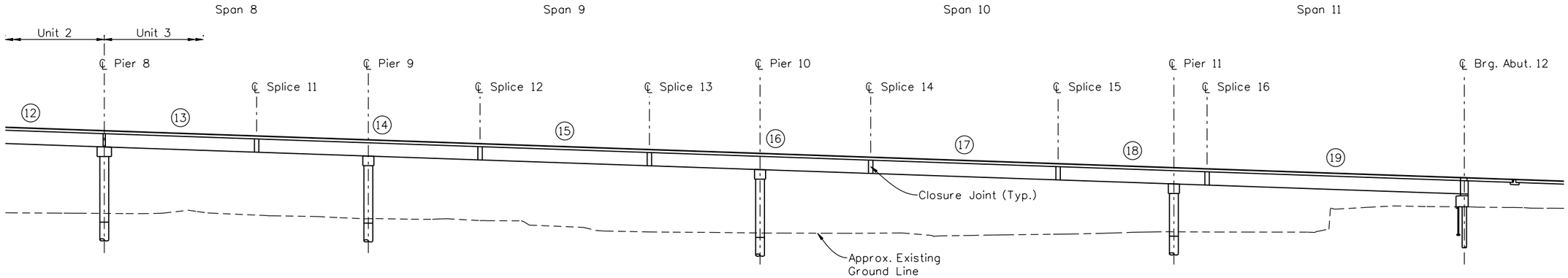

UNIT 3 - PHASE 4

PHASE 4
SEQUENCE OF OPERATIONS

1. Grout all tendons after stressing is complete.
2. Remove falsework.
3. Form and cast deck slab.
4. Install expansion joints.
5. Cast barrier rails.

Design			Detail			Quantities		
	INITIAL	DATE		INITIAL	DATE		INITIAL	DATE
Designed By			Detailed By	KJS	08/10	Quantities By		
Checked By			Checked By			Checked By		

Revision Dates (Preliminary Stage Only)

soellner 1:46:25 PM K:\08276\16311\Phase 2\Bridge\Drawings\16311BRDG_PH2_F-16-XR_ErectSeq02a.dgn
9/27/2010 CDOT-PDFDraftQuality_XM.pltcfg *

Print Date: 9/27/2010			
File Name: 16311BRDG_PH2_F-16-XR_ErectSeq02a.dgn			
Horiz. Scale: 1:50	Vert. Scale: As Noted		
Unit Information	Unit Leader Initials		
Summit Engineering Group, Incorporated Consulting Structural Engineers	10822 Toller Drive Suite 330 Littleton, CO 80127		

Sheet Revisions		
Date:	Comments	Init.

Colorado Department of Transportation
DOT Department of Transportation
2000 South Holly Street
Denver, CO 80222
Phone: 303-972-9112 FAX: 303-972-9114
Region 6 RLB

As Constructed
No Revisions:
Revised:
Void:

I-25/SANTA FE INTERCHANGE
RAMP 1 FLYOVER
UNIT 3 ERECTION SEQUENCE (2 OF 2)

Designer:	G. Reese	Structure Numbers	F-16-XR
Detailer:	K. Soellner		
Sheet Subset:	Bridge	Subset Sheets:	B of XX

Project No./Code
IM 0254-394
16311
Sheet Number 113

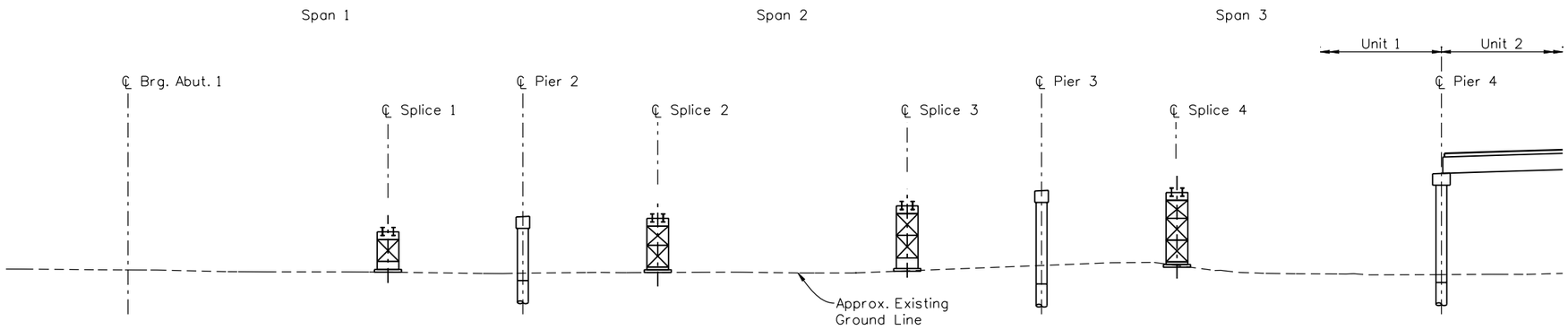

UNIT 1 - PHASE 1

PHASE 1
SEQUENCE OF OPERATIONS

1. Construct foundations, abutments and piers.
2. Stress and grout bottom flange pt in precast girders prior to erecting.
3. Stress and grout pt in Pier 4 lower cap
4. Erect shoring towers.

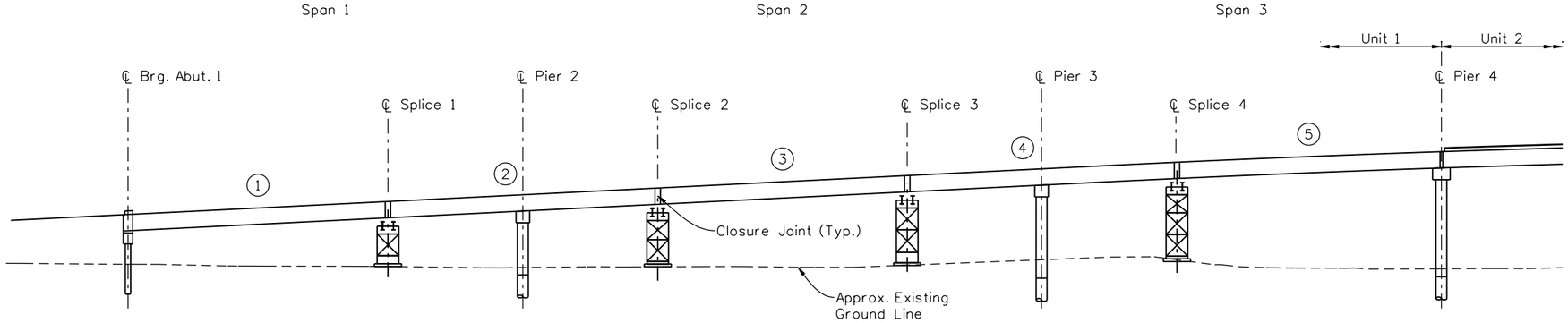

UNIT 1 - PHASE 2

PHASE 2
SEQUENCE OF OPERATIONS

1. Erect segments 1 through 5 in Unit 1. Pier girders are not set on interior piers. Girders 1L & 1R are set on bearing pads at Abutment 1. Girders 5L & 5R are set on permanent bearings at Pier 4.
2. Brace curved segments to falsework prior to releasing from cranes.
3. Cast closures at ends of segments, diaphragms over interior piers and diaphragms at Abutment 1 and Expansion Pier 4.
4. A maximum of 50psf construction live load is allowed on segments prior to casting diaphragms.
5. Set and grout all precast deck panels from Abutment 1 to Pier 4. Panels may be set after all diaphragms reach 4000psi concrete strength.
6. Stress and grout pt in interior piers.

(Preliminary Stage Only)

Revision Dates

Design	INITIAL	DATE
Designed By		
Checked By		

Detail	INITIAL	DATE
Detailed By	KJS	08/10
Checked By		

Quantities	INITIAL	DATE
Quantities By		
Checked By		

soellner 1:46:28 PM K:\08276\16311\Phase 2\Bridge\Drawings\16311BRDG_PH2_F-16-XR_ErectSeq03.dgn
9/27/2010 CDOT-PDFDraftQuality_XM.pltcfg *

Print Date: 9/27/2010
File Name: 16311BRDG_PH2_F-16-XR_ErectSeq03.dgn
Horiz. Scale: 1:50 Vert. Scale: As Noted
Unit Information Unit Leader Initials

Summit Engineering Group, Incorporated
Consulting Structural Engineers
10822 Teller Drive Suite 330
Littleton, CO 80127

Sheet Revisions		
Date:	Comments	Init.

Colorado Department of Transportation
DOT
DEPARTMENT OF TRANSPORTATION
2000 South Holly Street
Denver, CO 80222
Phone: 303-972-9112 FAX: 303-972-9114
Region 6 RLB

As Constructed
No Revisions:
Revised:
Void:

I-25/SANTA FE INTERCHANGE
RAMP 1 FLYOVER
UNIT 1 ERECTION SEQUENCE (1 OF 2)

Designer:	G. Reese	Structure Numbers	F-16-XR
Detailer:	K. Soellner		
Sheet Subset:	Bridge	Subset Sheets:	B of XX

Project No./Code
IM 0254-394
16311
Sheet Number 114

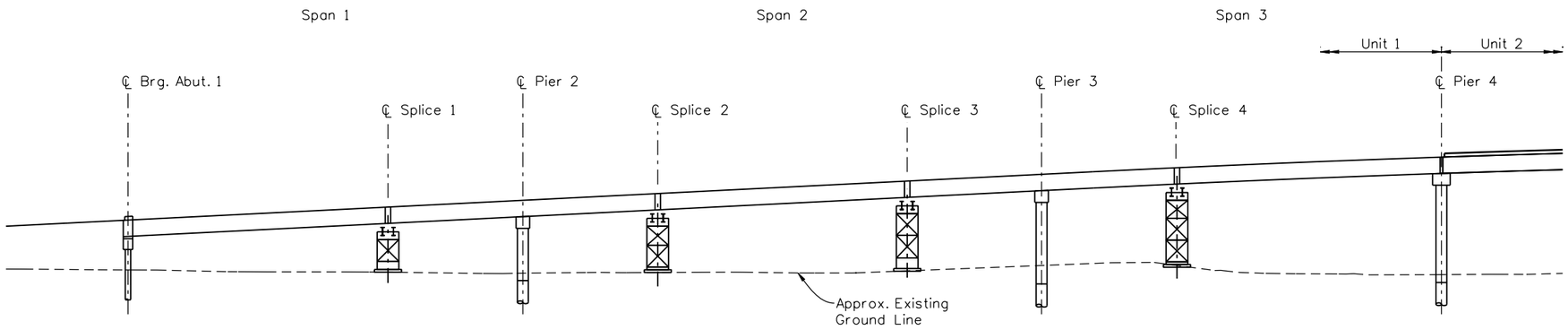

UNIT 1 - PHASE 3

PHASE 3
SEQUENCE OF OPERATIONS

1. Stress continuity tendons 1 to 4.

PHASE 3
STRESSING PROCEDURES

1. Stress continuity tendon 1 from Abutment 1 to Pier 4. Stress tendon on outside of curve to 50% Pjack, then stress tendon on inside of curve to 100% Pjack, then stress tendon on outside of curve to 100% Pjack.
2. Stress continuity tendon 2 from Abutment 1 to Pier 4 similarly to tendon 1.
3. Stress continuity tendon 3 from Abutment 1 to Pier 4 similarly to tendon 1.
4. Stress continuity tendon 4 from Abutment 1 to Pier 4 similarly to tendon 1.

TENDON Pjack

Pjack = 527kips for tendons 1, 2, 3 & 4

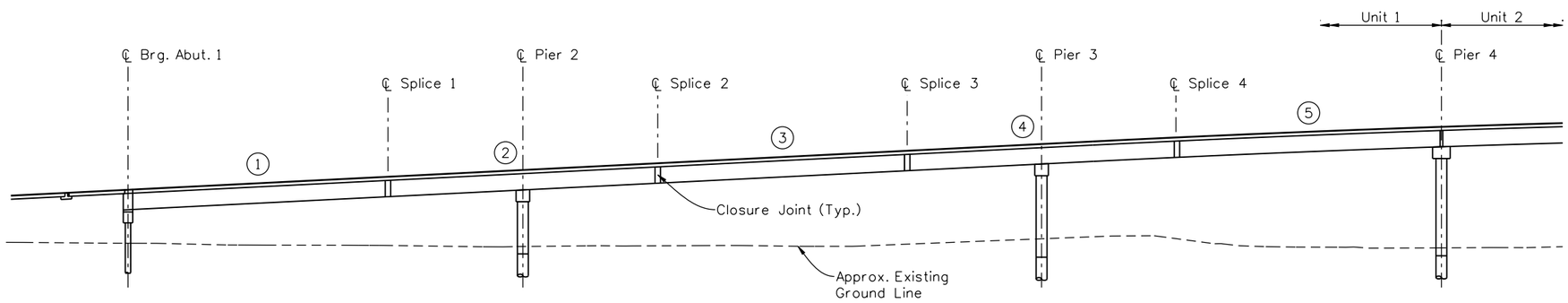

UNIT 1 - PHASE 4

PHASE 4
SEQUENCE OF OPERATIONS

1. Grout all tendons after stressing is complete.
2. Remove falsework.
3. Form and cast deck slab.
4. Install expansion joints.
5. Cast barrier rails.

(Preliminary Stage Only)
Revision Dates

Design	INITIAL	DATE	Detail	INITIAL	DATE	Quantities	INITIAL	DATE
Designed By			Detailed By	KJS	08/10	Quantities By		
Checked By			Checked By			Checked By		

soellner 1:46:32 PM K:\08276\16311\Phase 2\Bridge\Drawings\16311BRDG_PH2_F-16-XR_ErectSeq03a.dgn
9/27/2010 CDOT-PDFDraftQuality_XM.pltcfg *

Print Date: 9/27/2010
File Name: 16311BRDG_PH2_F-16-XR_ErectSeq03a.dgn
Horiz. Scale: 1:50 Vert. Scale: As Noted
Unit Information Unit Leader Initials

Summit Engineering Group, Incorporated
Consulting Structural Engineers
10822 Teller Drive Suite 330
Littleton, CO 80127

Sheet Revisions		
Date:	Comments	Init.

Colorado Department of Transportation
DOT Department of Transportation
2000 South Holly Street
Denver, CO 80222
Phone: 303-972-9112 FAX: 303-972-9114
Region 6 RLB

As Constructed
No Revisions:
Revised:
Void:

I-25/SANTA FE INTERCHANGE
RAMP 1 FLYOVER
UNIT 1 ERECTION SEQUENCE (2 OF 2)

Designer:	G. Reese	Structure Numbers	F-16-XR
Detailer:	K. Soellner		
Sheet Subset:	Bridge	Subset Sheets:	B of XX

Project No./Code
IM 0254-394
16311
Sheet Number 115

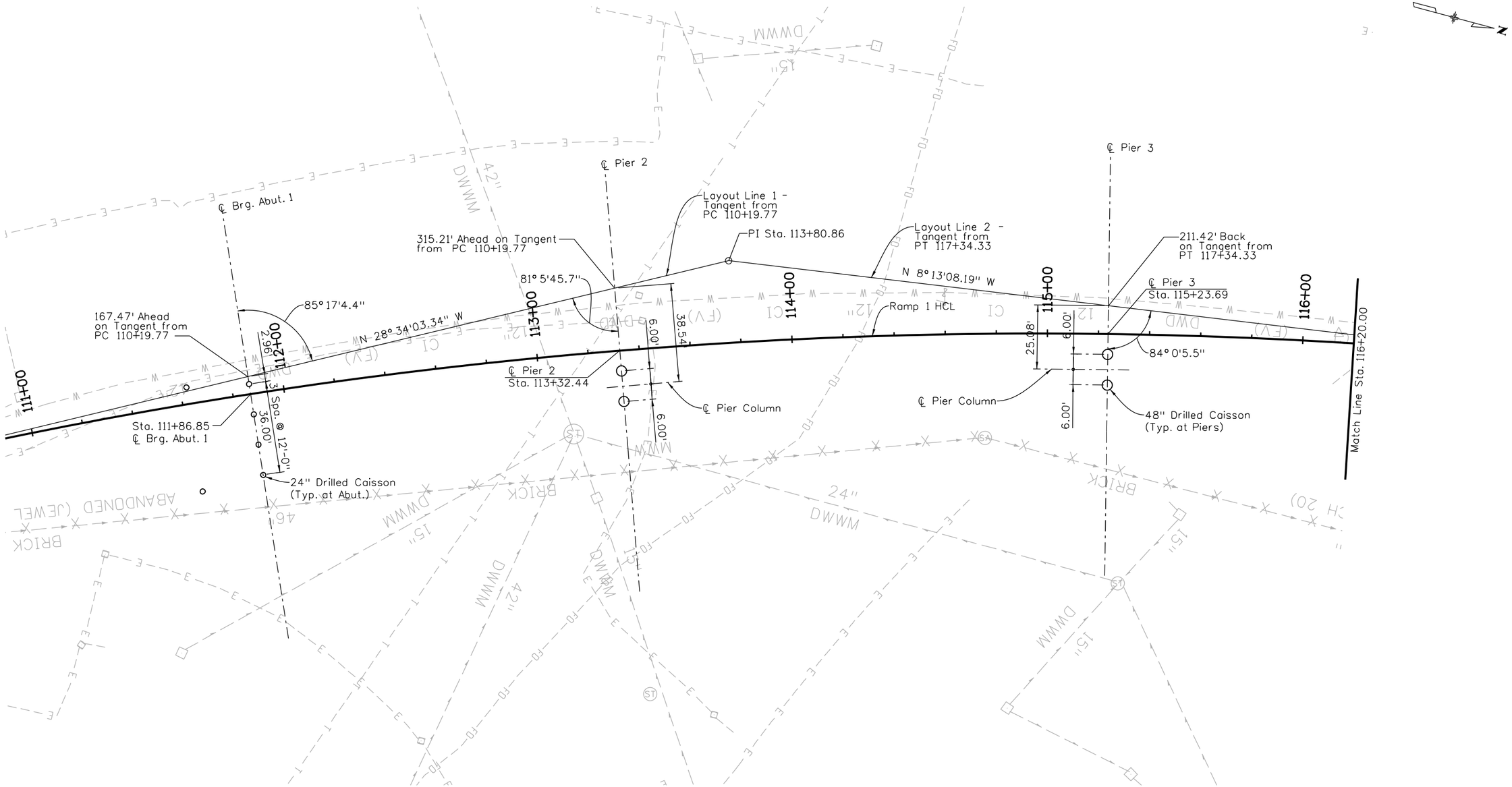

Quantities	INITIAL	DATE
Quantities By		
Checked By		

Detail	INITIAL	DATE
Detailed By	RAD	08/10
Checked By	PRS	

Design	INITIAL	DATE
Designed By	GR/PRS	08/10
Checked By		

Revision Dates (Preliminary Stage Only)

INITIAL	DATE

soeliner 6:25:53 AM K:\08276\16311\Phase 2\Bridge\Drawings\16311BRDG_PH2_F-16-XR_FndLay01.dgn
9/28/2010 CDOT-DefaultPrinter_XM.pltcfg

Print Date: 9/28/2010
File Name: 16311BRDG_PH2_F-16-XR_FndLay01.dgn
Horiz. Scale: 1:40 Vert. Scale: As Noted
Unit Information Unit Leader Initials

Summit Engineering Group, Incorporated
Consulting Structural Engineers
10822 Teller Drive Suite 330
Littleton, CO 80127

Sheet Revisions

Date:	Comments	Init.

Colorado Department of Transportation
DOT Department of Transportation
2000 South Holly Street
Denver, CO 80222
Phone: 303-972-9112 FAX: 303-972-9114
Region 6 RLB

As Constructed

No Revisions:	
Revised:	
Void:	

I-25/SANTA FE INTERCHANGE RAMP 1 FLYOVER CAISSON LAYOUT (1 OF 4)

Designer:	G. Reese	Structure Numbers	F-16-XR
Detailer:	M. Eberly		
Sheet Subset:	Bridge	Subset Sheets:	B of XX

Project No./Code	
IM 0254-394	
16311	
Sheet Number	116

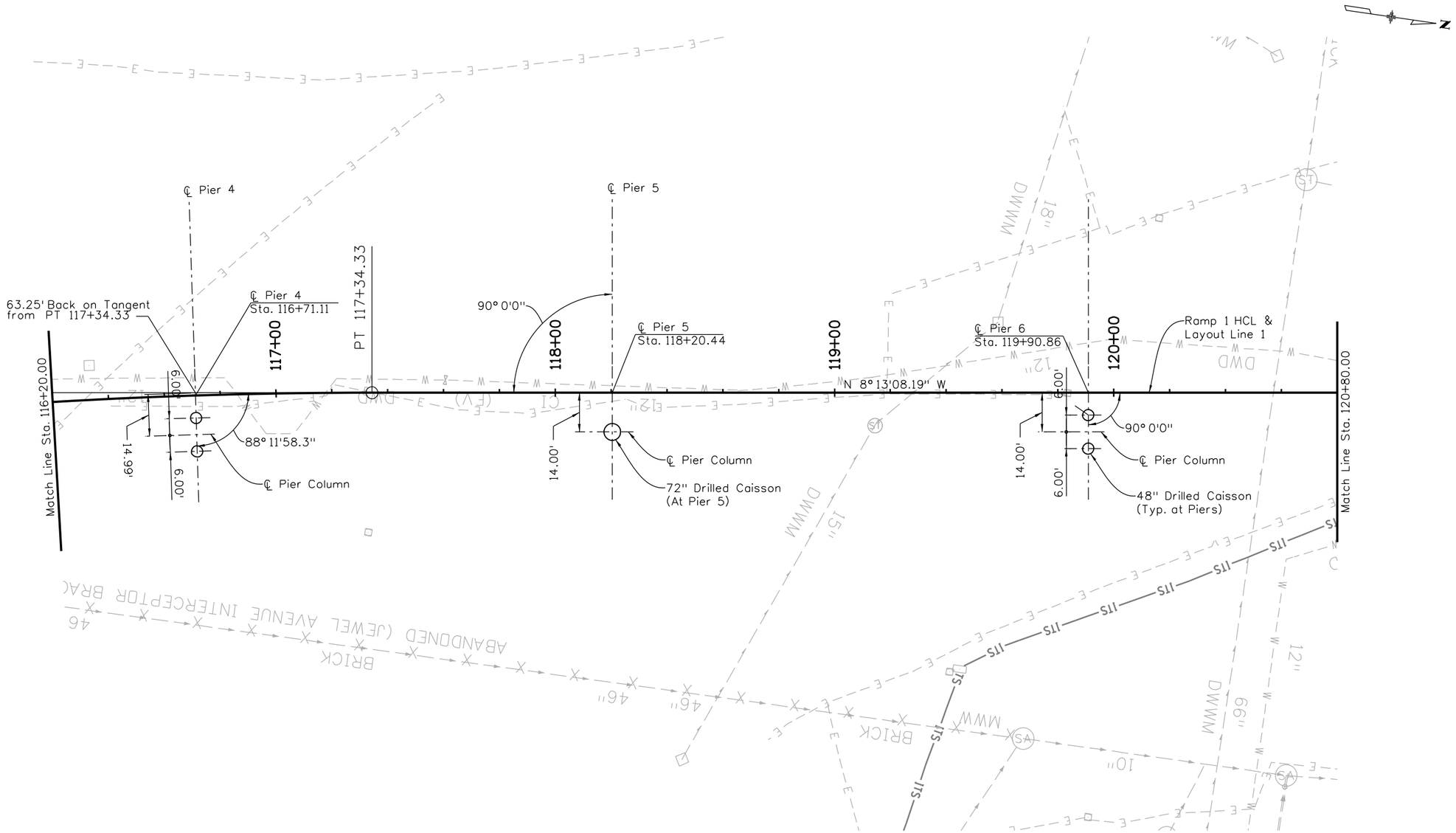

Design			Detail			Quantities		
	INITIAL	DATE		INITIAL	DATE		INITIAL	DATE
Designed By	GR/PRS	08/10	Detailed By	RAD	08/10	Quantities By		
Checked By			Checked By	PRS		Checked By		

Revision Dates (Preliminary Stage Only)

soellner 6:26:36 AM K:\08276\16311\Phase 2\Bridge\Drawings\16311BRDG_PH2_F-16-XR_FndLay02.dgn
9/28/2010 CDOT-DefaultPrinter_XM.pltcfg *

Print Date: 9/28/2010
File Name: 16311BRDG_PH2_F-16-XR_FndLay02.dgn
Horiz. Scale: 1:40 Vert. Scale: As Noted
Unit Information Unit Leader Initials

Summit Engineering Group, Incorporated
Consulting Structural Engineers
10822 Teller Drive Suite 330
Littleton, CO 80127

Sheet Revisions		
Date:	Comments	Init.

Colorado Department of Transportation
DOT DEPARTMENT OF TRANSPORTATION
2000 South Holly Street
Denver, CO 80222
Phone: 303-972-9112 FAX: 303-972-9114
Region 6 RLB

As Constructed
No Revisions:
Revised:
Void:

I-25/SANTA FE INTERCHANGE
RAMP 1 FLYOVER
CAISSON LAYOUT (2 OF 4)

Designer: G. Reese
Detailer: M. Eberly
Sheet Subset: Bridge
Structure Numbers: F-16-XR
Subset Sheets: B of XX

Project No./Code
IM 0254-394
16311
Sheet Number 117

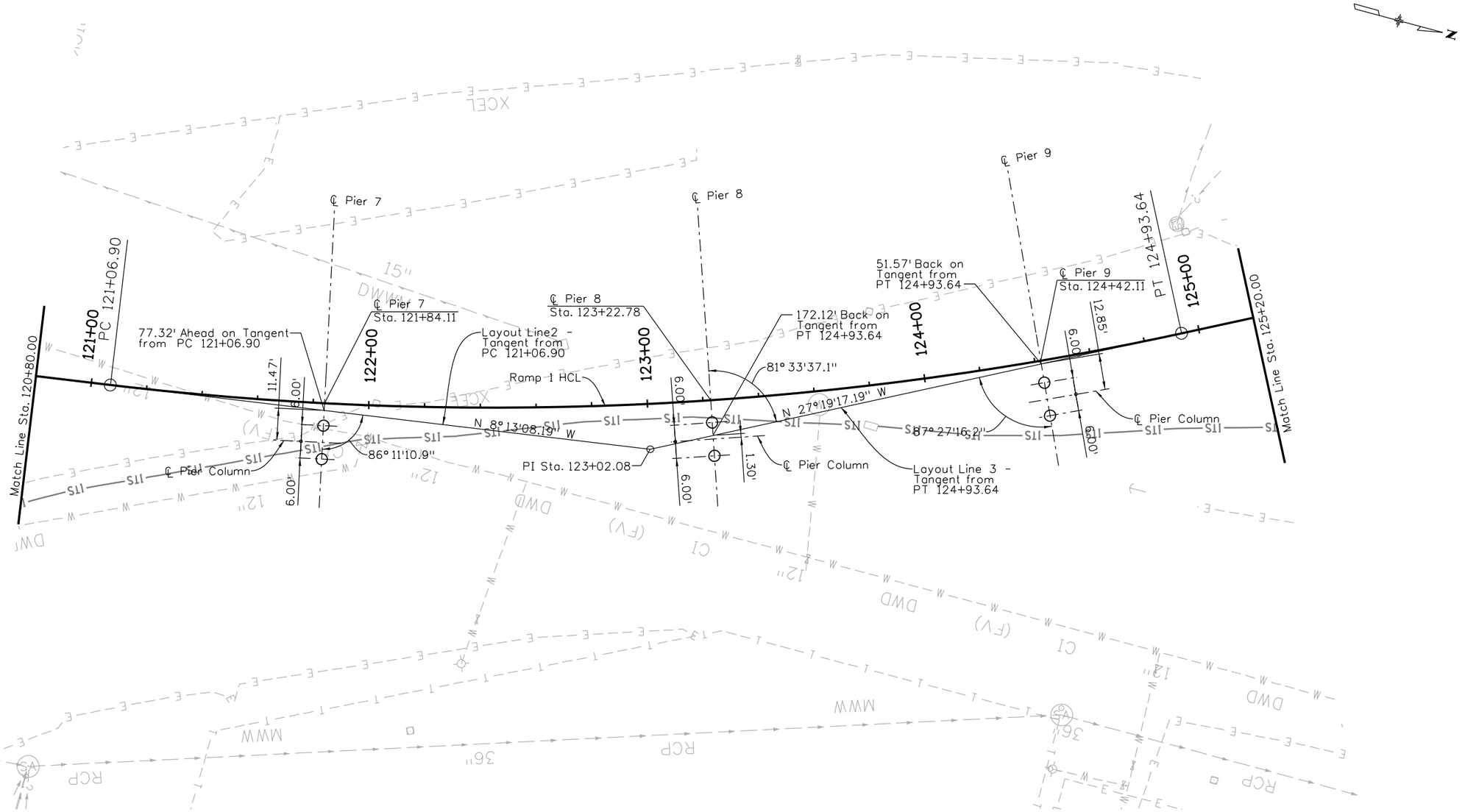

Revision Dates (Preliminary Stage Only)

Quantities	INITIAL	DATE
Designed By	GR/PRS	08/10
Checked By		

Detail	INITIAL	DATE
Detailed By	RAD	08/10
Checked By	PRS	

Design	INITIAL	DATE
Designed By	GR/PRS	08/10
Checked By		

Quantities	INITIAL	DATE
Quantities By		
Checked By		

soeliner 6:27:17 AM K:\08276\16311\Phase 2\Bridge\Drawings\16311BRDG_PH2_F-16-XR_FndLay03.dgn
9/28/2010 CDOT-DefaultPrinter_XM.pltcfg *

Print Date: 9/28/2010
File Name: 16311BRDG_PH2_F-16-XR_FndLay03.dgn
Horiz. Scale: 1:40 Vert. Scale: As Noted
Unit Information Unit Leader Initials

Summit Engineering Group, Incorporated — Consulting Structural Engineers
10822 Teller Drive Suite 330
Littleton, CO 80127

Sheet Revisions		
Date:	Comments	Init.

Colorado Department of Transportation
DEPARTMENT OF TRANSPORTATION
2000 South Holly Street
Denver, CO 80222
Phone: 303-972-9112 FAX: 303-972-9114
Region 6 RLB

As Constructed
No Revisions:
Revised:
Void:

I-25/SANTA FE INTERCHANGE
RAMP 1 FLYOVER
CAISSON LAYOUT (3 OF 4)

Designer: G. Reese
Detailer: M. Eberly
Sheet Subset: Bridge
Structure Numbers: F-16-XR
Subset Sheets: B of XX

Project No./Code
IM 0254-394
16311
Sheet Number 118

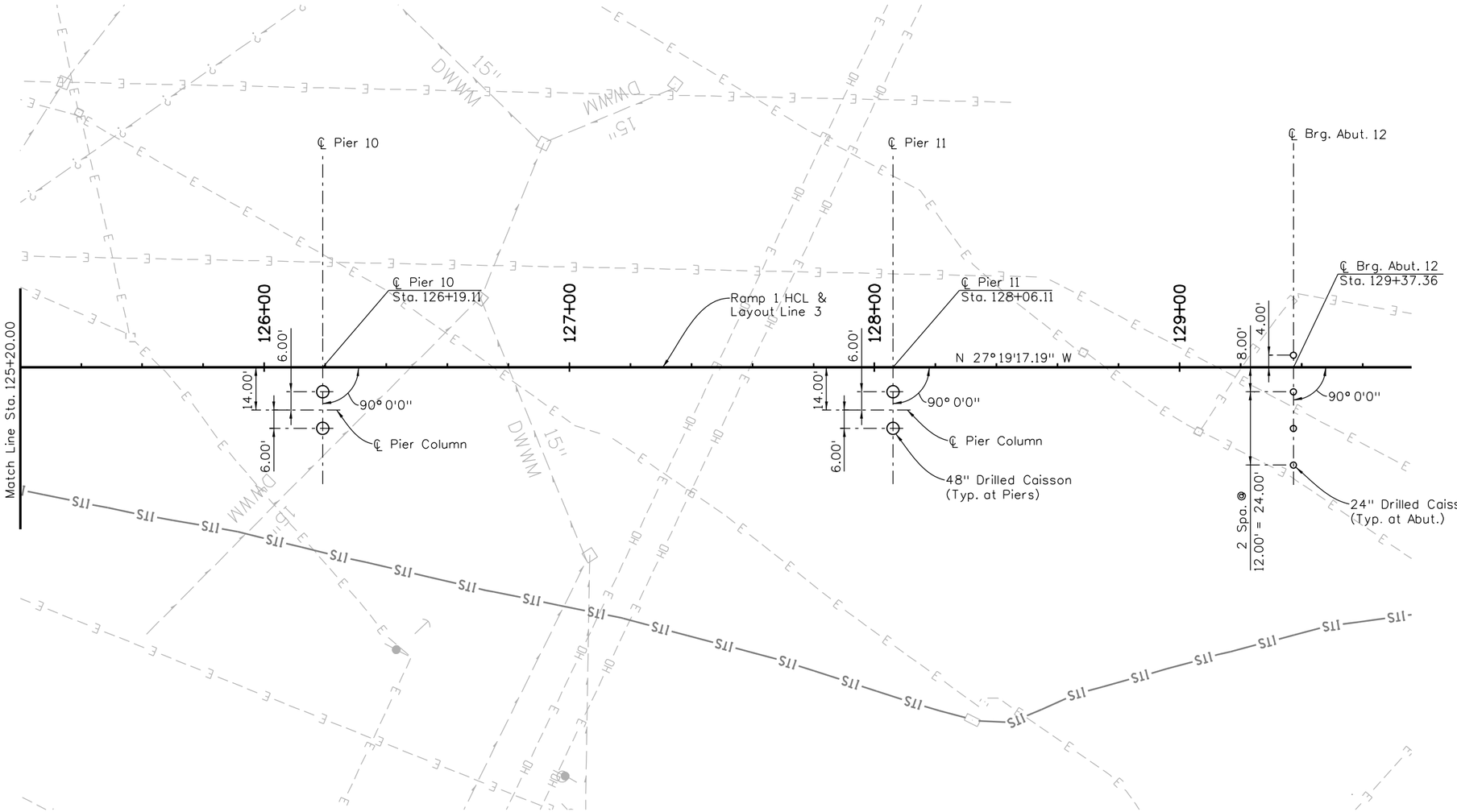

Revision Dates (Preliminary Stage Only)

Quantities	INITIAL	DATE
Quantities By		
Checked By		

Detail	INITIAL	DATE
Detailed By	RAD	08/10
Checked By	PRS	

Design	INITIAL	DATE
Designed By	GR/PRS	08/10
Checked By		

soeliner 6:30:28 AM K:\08276\16311\Phase 2\Bridge\Drawings\16311BRDG_PH2_F-16-XR_FndLay04.dgn
9/28/2010 CDOT-DefaultPrinter_XM.pltcfg *

Print Date: 9/28/2010
File Name: 16311BRDG_PH2_F-16-XR_FndLay04.dgn
Horiz. Scale: 1:40 Vert. Scale: As Noted
Unit Information Unit Leader Initials

Summit Engineering Group, Incorporated
Consulting Structural Engineers
10822 Teller Drive Suite 330
Littleton, CO 80127

Sheet Revisions		
Date:	Comments	Init.

Colorado Department of Transportation
DOT Department of Transportation
2000 South Holly Street
Denver, CO 80222
Phone: 303-972-9112 FAX: 303-972-9114
Region 6 RLB

As Constructed
No Revisions:
Revised:
Void:

I-25/SANTA FE INTERCHANGE
RAMP 1 FLYOVER
CAISSON LAYOUT (4 OF 4)

Designer: G. Reese
Detailer: M. Eberly
Sheet Subset: Bridge
Structure Numbers: F-16-XR
Subset Sheets: B of XX

Project No./Code
IM 0254-394
16311
Sheet Number 119

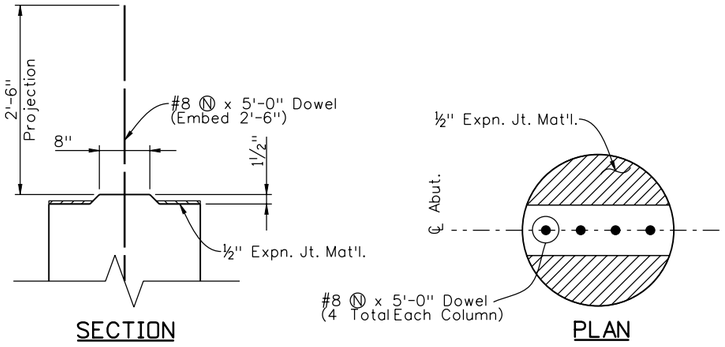

24 INCH COLUMN TOP DETAILS

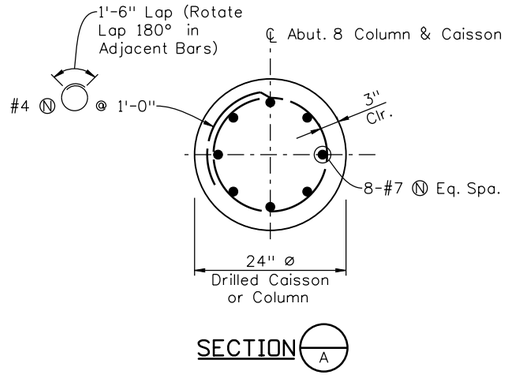

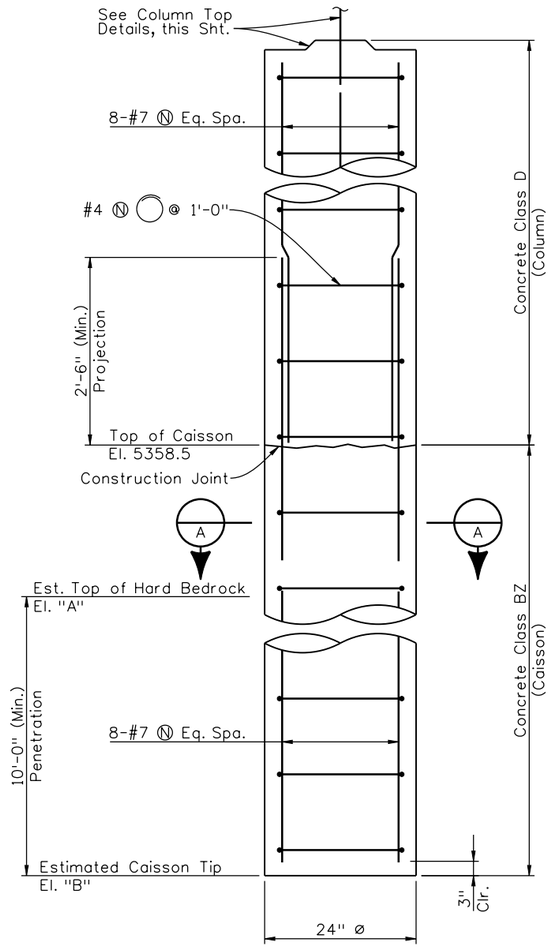

24 INCH CAISSON DETAIL

CAISSON DATA	
	24" ø CAISSONS
RESISTANCE FACTOR ø	0.50 END BEARING 0.55 SIDE SHEAR
ULTIMATE ALLOWABLE END BEARING CAPACITY	125.0 ksf x ø x Ag = 196 kips
ULTIMATE ALLOWABLE SIDE SHEAR RESISTANCE	6.0 ksf x ø x PERIMETER= 20.7 k/ft
MAXIMUM CAISSON FACTORED AXIAL DESIGN LOAD	x kips

CAISSON NOTES:

1. Caissons shall extend at least to the estimated tip elevation. Caissons shall be further advanced into the hard bedrock if necessary to obtain the specified minimum embedment below the estimated top of hard bedrock as determined in the field by the Engineer.
2. Top of hard bedrock elevation shall be verified at time of construction by the Engineer.
3. The use of temporary casing & dewatering during drilling caissons may be required. The cost of temporary casing & dewatering shall not be paid for separately but shall be included in the work.

(Preliminary Stage Only)

Revision Dates	
TIE	MM/YY
XXX	MM/YY
XXX	MM/YY

	Design			Detail			Quantities		
	INITIAL	DATE		INITIAL	DATE		INITIAL	DATE
Designed By	XXX	MM/YY	Detailed By	KJS	07/09	Quantities By	XXX	MM/YY
Checked By	XXX	MM/YY	Checked By	PRS	08/09	Checked By	XXX	MM/YY

soellner 1:46:52 PM K:\08276\16311\Phase 2\Bridge\Drawings\16311BRDG_PH2_F-16-XR_FndDetails01.dgn
9/27/2010 CDOT-PDFDraftQuality_XM.pltcfg *

Print Date: 9/27/2010	Sheet Revisions		
File Name: 16311BRDG_PH2_F-16-XR_FndDetails01.dgn	Date:	Comments	Init.
Horiz. Scale: 1:1 Vert. Scale: As Noted			
Unit Information Unit Leader Initials			
Summit Engineering Group, Incorporated — Consulting Structural Engineers — 10822 Teller Drive Suite 330 Littleton, CO 80127			

Colorado Department of Transportation
DOT — Department of Transportation
2000 South Holly Street
Denver, CO 80222
Phone: 303-972-9112 FAX: 303-972-9114
Region 6 RLB

As Constructed	
No Revisions:	
Revised:	
Void:	

I-25/SANTA FE INTERCHANGE
RAMP 1 FLYOVER
CAISSON DETAILS (1 OF 2)

Designer:	x	Structure Numbers	F-16-XR
Detailer:	K. Soellner		
Sheet Subset:	Bridge	Subset Sheets:	x of x

Project No./Code	
IM 0254-394	
16311	
Sheet Number	120

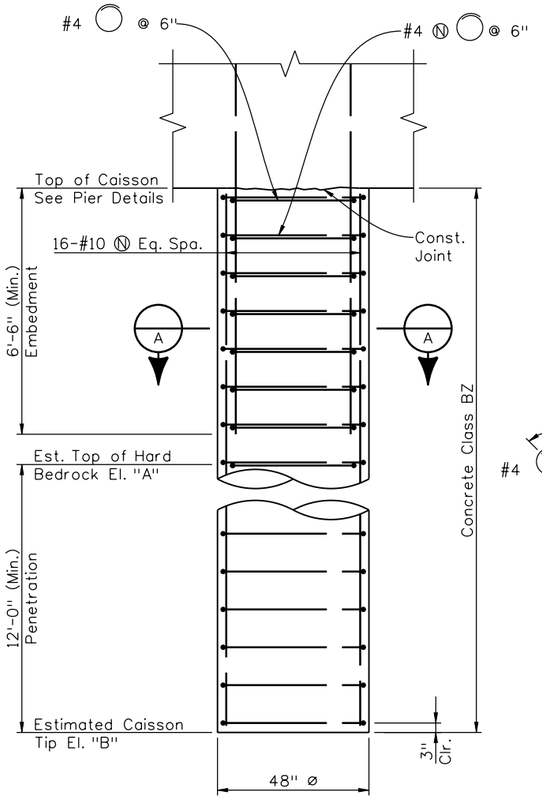

48 INCH CAISSON DETAIL

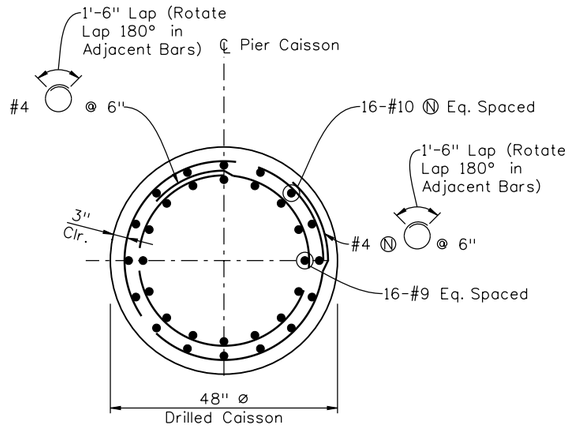

SECTION A

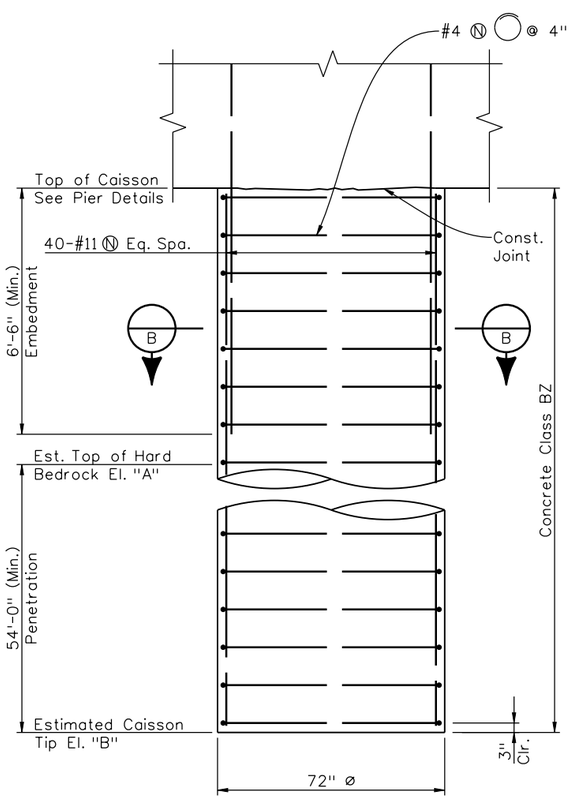

72 INCH CAISSON DETAIL

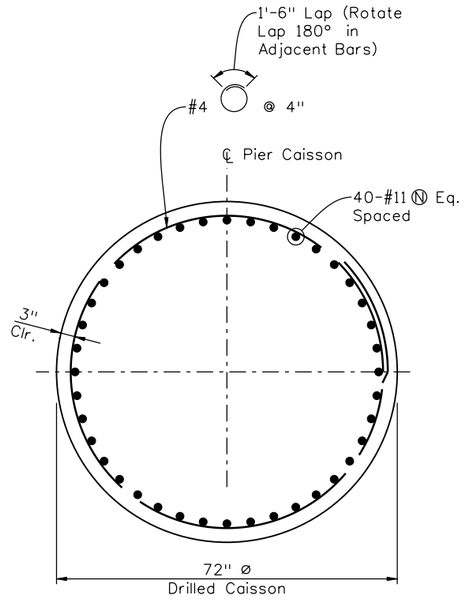

SECTION B

CAISSON DATA

	48" ø CAISSONS	72" ø CAISSONS
RESISTANCE FACTOR ø	0.50 END BEARING 0.55 SIDE SHEAR	0.50 END BEARING 0.55 SIDE SHEAR
ULTIMATE ALLOWABLE END BEARING CAPACITY	125.0 ksf x ø x Ag = 785 kips	125.0 ksf x ø x Ag = 1,767 kips
ULTIMATE ALLOWABLE SIDE SHEAR RESISTANCE	6.0 ksf x ø x PERIMETER= 41.5 k/ft	6.0 ksf x ø x PERIMETER= 62.2 k/ft
MAXIMUM CAISSON FACTORED AXIAL DESIGN LOAD	2,776 kips	4,504 kips

ELEVATION TABLE

	Elev. A	Elev. B
Abutment 1	x	x
Pier 2	5199.0	x
Pier 3	5199.0	x
Pier 4	5197.0	x
Pier 5	5197.0	5143.0
Pier 6	5197.0	5149.0
Pier 7	5199.0	5151.0
Pier 8	5200.0	x
Pier 9	5202.0	x
Pier 10	5206.0	x
Pier 11	5210.0	x
Abutment 12	x	x

CAISSON NOTES:

1. Caissons shall extend at least to the estimated tip elevation. Caissons shall be further advanced into the hard bedrock if necessary to obtain the specified minimum embedment below the estimated top of hard bedrock as determined in the field by the Engineer.
2. Top of hard bedrock elevation shall be verified at time of construction by the Engineer.
3. The use of temporary casing & dewatering during drilling caissons may be required. The cost of temporary casing & dewatering shall not be paid for separately but shall be included in the work.

Design	INITIAL	DATE	Detail	INITIAL	DATE	Quantities	INITIAL	DATE
Designed By	XXX	MM/YY	Detailed By	KJS	07/09	Quantities By	XXX	MM/YY
Checked By	XXX	MM/YY	Checked By	PRS	08/09	Checked By	XXX	MM/YY

Revision Dates (Preliminary Stage Only)
MM/YY

Print Date: 9/27/2010
File Name: 16311BRDG_PH2_F-16-XR_FndDetails02.dgn
Horiz. Scale: 1:1 Vert. Scale: As Noted
Unit Information Unit Leader Initials

Summit Engineering Group, Incorporated
Consulting Structural Engineers
10822 Teller Drive Suite 330
Littleton, CO 80127

Sheet Revisions		
Date:	Comments	Init.

Colorado Department of Transportation
DEPARTMENT OF TRANSPORTATION
2000 South Holly Street
Denver, CO 80222
Phone: 303-972-9112 FAX: 303-972-9114
Region 6 RLB

As Constructed
No Revisions:
Revised:
Void:

I-25/SANTA FE INTERCHANGE
RAMP 1 FLYOVER
CAISSON DETAILS (2 OF 2)

Designer: x
Detailer: K. Soellner
Sheet Subset: Bridge
Structure Numbers: F-16-XR
Subset Sheets: x of x

Project No./Code
IM 0254-394
16311
Sheet Number 121

soellner 1:46:55 PM K:\08276\16311\Phase 2\Bridge\Drawings\16311BRDG_PH2_F-16-XR_FndDetails02.dgn
9/27/2010 CDOT-PDFDraftQuality_XM.pltcfg *

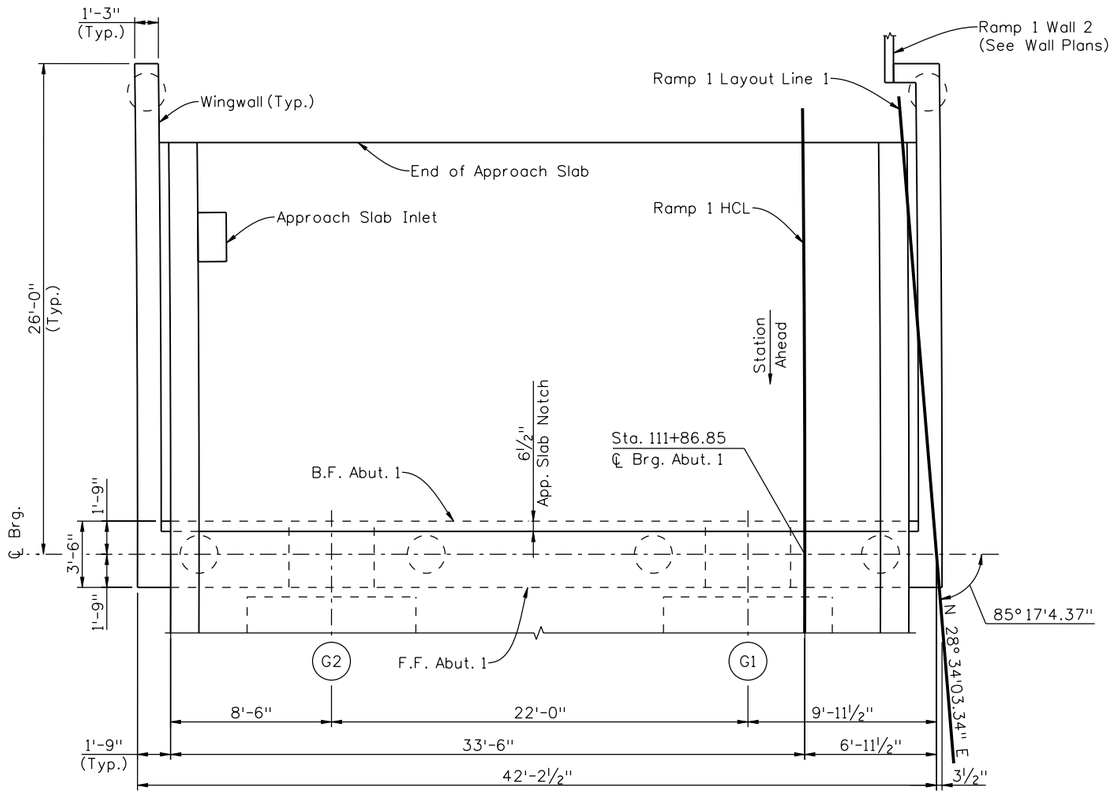

PLAN

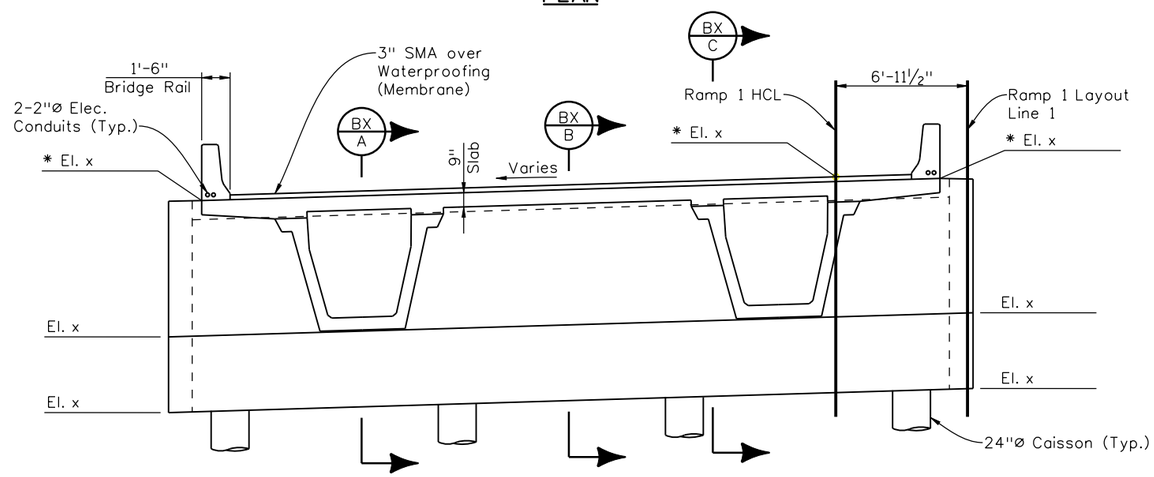

ELEVATION
(Looking South)

* Elevations given at ℄ Brg.

Design			Detail			Quantities		
	INITIAL	DATE		INITIAL	DATE		INITIAL	DATE
Designed By			Detailed By	KJS	08/10	Quantities By		
Checked By			Checked By			Checked By		

Revision Dates (Preliminary Stage Only)
MM/YY

soellner 1:46:59 PM K:\08276\16311\Phase 2\Bridge\Drawings\16311BRDG_PH2_F-16-XR_Abut1.dgn
9/27/2010 CDOT-PDFDraftQuality_XM.pltcfg *

Print Date: 9/27/2010
File Name: 16311BRDG_PH2_F-16-XR_Abut1.dgn
Horiz. Scale: 1:1 Vert. Scale: As Noted
Unit Information Unit Leader Initials

Summit Engineering Group, Incorporated
Consulting Structural Engineers
10822 Toller Drive Suite 330
Littleton, CO 80127

Sheet Revisions		
Date:	Comments	Init.

Colorado Department of Transportation
DOT Department of Transportation
2000 South Holly Street
Denver, CO 80222
Phone: 303-972-9112 FAX: 303-972-9114
Region 6 RLB

As Constructed
No Revisions:
Revised:
Void:

I-25/SANTA FE INTERCHANGE
RAMP 1 FLYOVER
ABUTMENT 1 PLAN & ELEVATION

Designer:	x	Structure Numbers	F-16-XR
Detailer:	K. Soellner		
Sheet Subset:	Bridge	Subset Sheets:	XXX of XX

Project No./Code
IM 0254-394
16311
Sheet Number 122

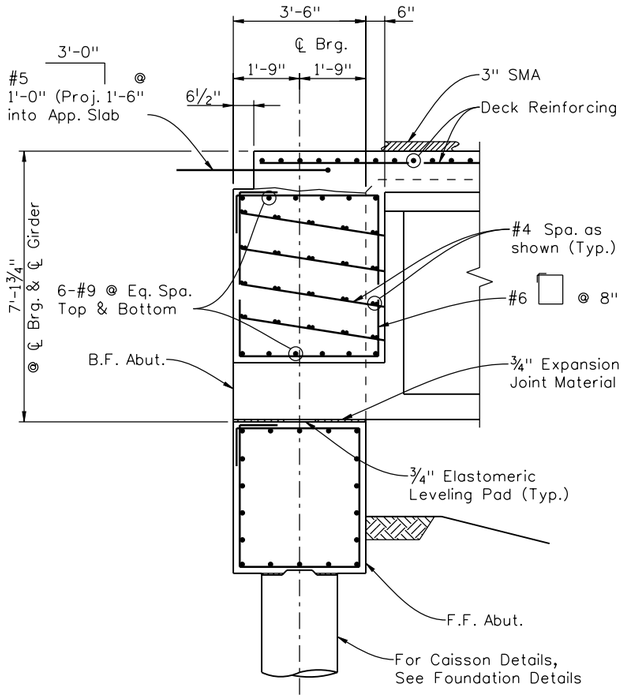

SECTION A

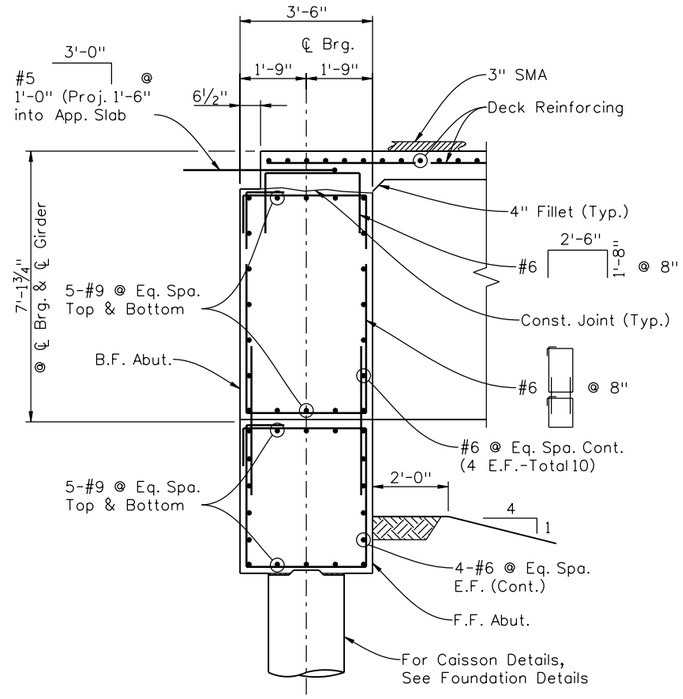

SECTION B

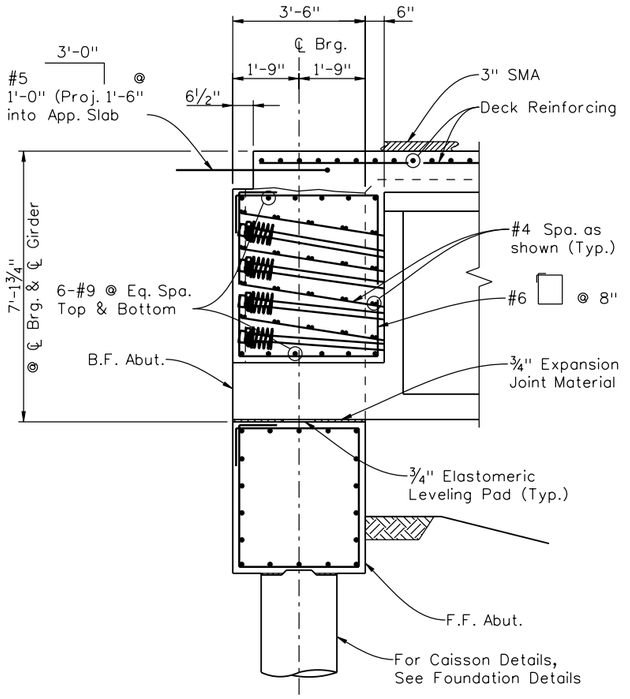

SECTION C

NOTES:

1. Elastomeric Bearing Pad and Expansion Joint Material shall not be paid for separately, but shall be included in Item 618 Prestressed Concrete U Girder (Pre-tensioned and Post-tensioned).
2. All Abutment and Wingwall Concrete shall be Class D (Bridge).

Revision Dates (Preliminary Stage Only)

Rev.	MM/YY

Design	INITIAL	DATE
Designed By		
Checked By		

Detail	INITIAL	DATE
Detailed By	KJS	08/10
Checked By		

Quantities	INITIAL	DATE
Quantities By		
Checked By		

soellner 1:47:02 PM K:\08276\16311\Phase 2\Bridge\Drawings\16311BRDG_PH2_F-16-XR_Abut1Details.dgn
9/27/2010 CDOT-PDFDraftQuality_XM.pltcfg *

Print Date: 9/27/2010
File Name: 16311BRDG_PH2_F-16-XR_Abut1Details.dgn
Horiz. Scale: 1:1 Vert. Scale: As Noted
Unit Information Unit Leader Initials

Summit Engineering Group, Incorporated
CONSULTING STRUCTURAL ENGINEERS
10822 Teller Drive Suite 330
Littleton, CO 80127

Sheet Revisions

Date:	Comments	Init.

Colorado Department of Transportation
DEPARTMENT OF TRANSPORTATION
2000 South Holly Street
Denver, CO 80222
Phone: 303-972-9112 FAX: 303-972-9114
Region 6 RLB

As Constructed
No Revisions:
Revised:
Void:

I-25/SANTA FE INTERCHANGE
RAMP 1 FLYOVER
ABUTMENT 1 DETAILS

Designer: x
Detailer: K. Soellner
Sheet Subset: Bridge
Structure Numbers: F-16-XR
Subset Sheets: XXX of XX

Project No./Code
IM 0254-394
16311
Sheet Number 123

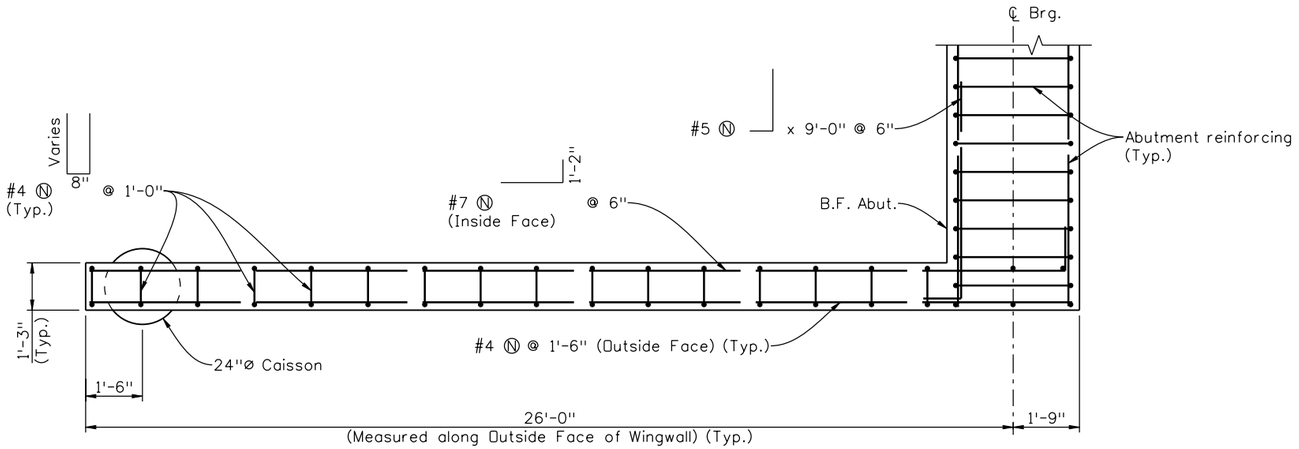

TYPICAL WINGWALL PLAN

(Shown for SE Wingwall, SW is similar)
(See Abut. Plan & Elevation for additional information)

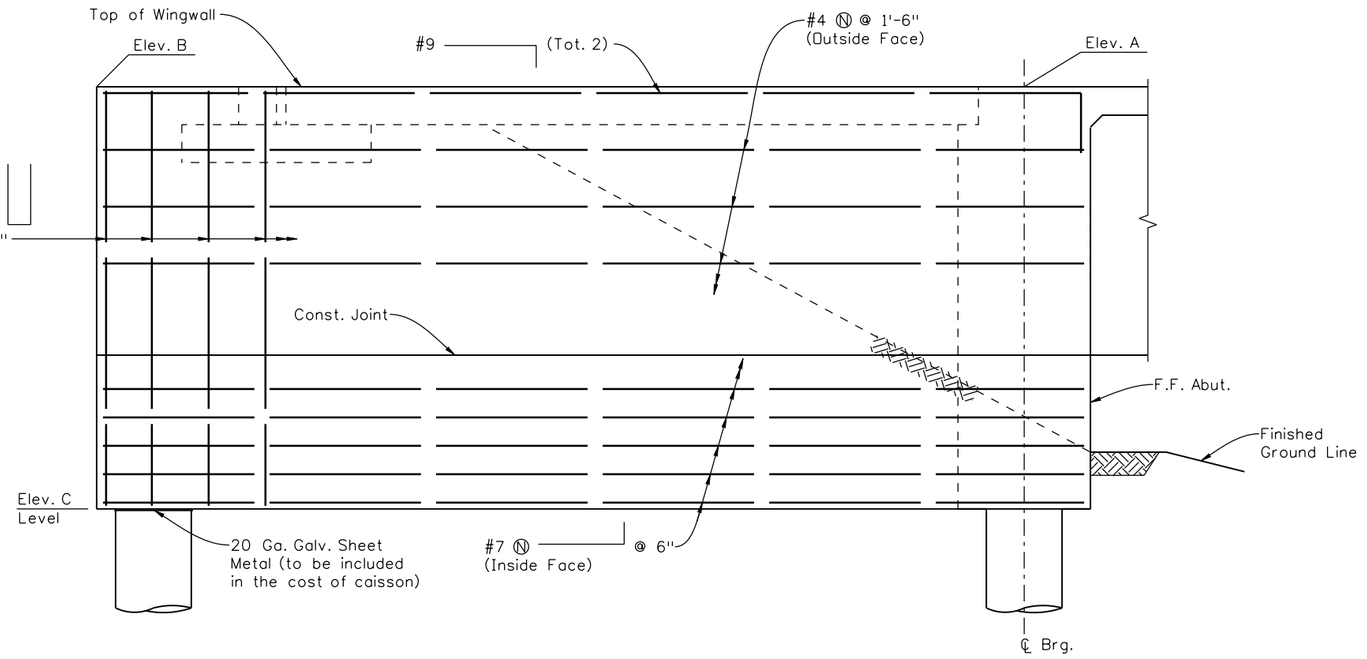

TYPICAL WINGWALL ELEVATION

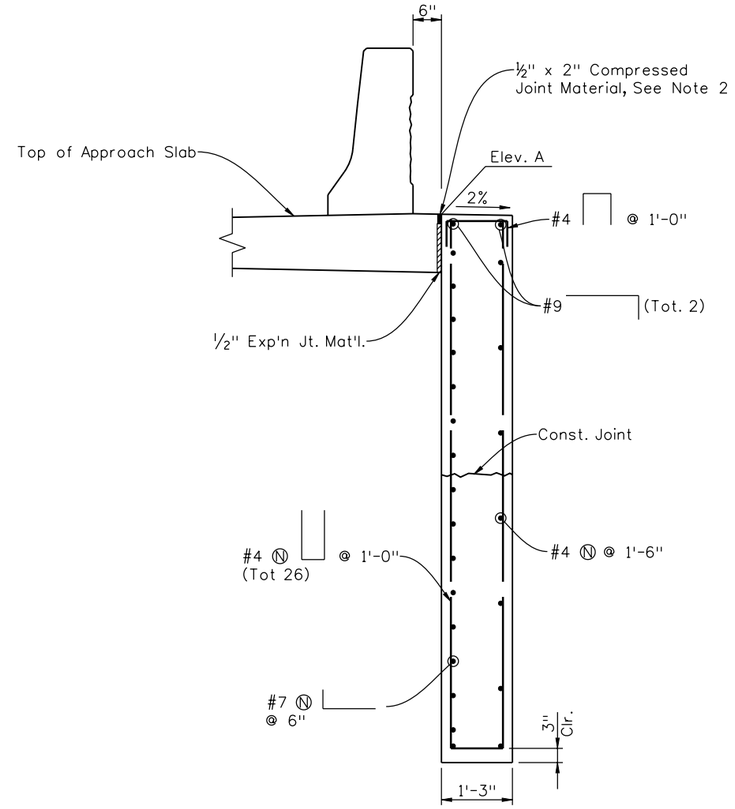

TYPICAL SECTION

NOTE:

1. Compressed Joint Material shall be pre-compressed, chemically resistant, open cell polyurethane foam sealant, impregnated with a water-repellent material, with adhesive backing on both sides. The Joint Material shall be epoxied in place, and all splices sealed, as recommended by the supplier of the Joint Material. The cost shall be included in the cost of Item 601, Class D Concrete.

   Acceptable Compressed Joint Material Alternatives:
   - Will-Seal
   - Seal-Mate #517
   - Poly-Tite "N"

ELEVATION TABLE

	Location	East Wing	West Wing
Elevation A	Abut. 1	x	x
Elevation B	Abut. 1	x	x
Elevation C	Abut. 1	x	x

Revision Dates (Preliminary Stage Only): MM/YY

Design	INITIAL	DATE
Designed By		
Checked By		

Detail	INITIAL	DATE
Detailed By	KJS	09/10
Checked By		

Quantities	INITIAL	DATE
Quantities By		
Checked By		

Print Date: 9/27/2010
File Name: 16311BRDG_PH2_F-16-XR_AbutWing.dgn
Horiz. Scale: 1:1 Vert. Scale: As Noted
Unit Information Unit Leader Initials

Summit Engineering Group, Incorporated — Consulting Structural Engineers
10822 Teller Drive Suite 330
Littleton, CO 80127

Sheet Revisions		
Date:	Comments	Init.

Colorado Department of Transportation
DOT — Department of Transportation
2000 South Holly Street
Denver, CO 80222
Phone: 303-972-9112 FAX: 303-972-9114
Region 6 RLB

As Constructed
No Revisions:
Revised:
Void:

I-25/SANTA FE INTERCHANGE
RAMP 1 FLYOVER
WINGWALL DETAILS

Designer:	x	Structure Numbers	F-16-XR
Detailer:	K. Soellner		
Sheet Subset:	Bridge	Subset Sheets:	Bxx of x

Project No./Code
IM 0254-394
16311
Sheet Number 124

soellner 1:47:06 PM K:\08276\16311\Phase 2\Bridge\Drawings\16311BRDG_PH2_F-16-XR_AbutWing.dgn
9/27/2010 CDOT-PDFDraftQuality_XM.pltcfg *

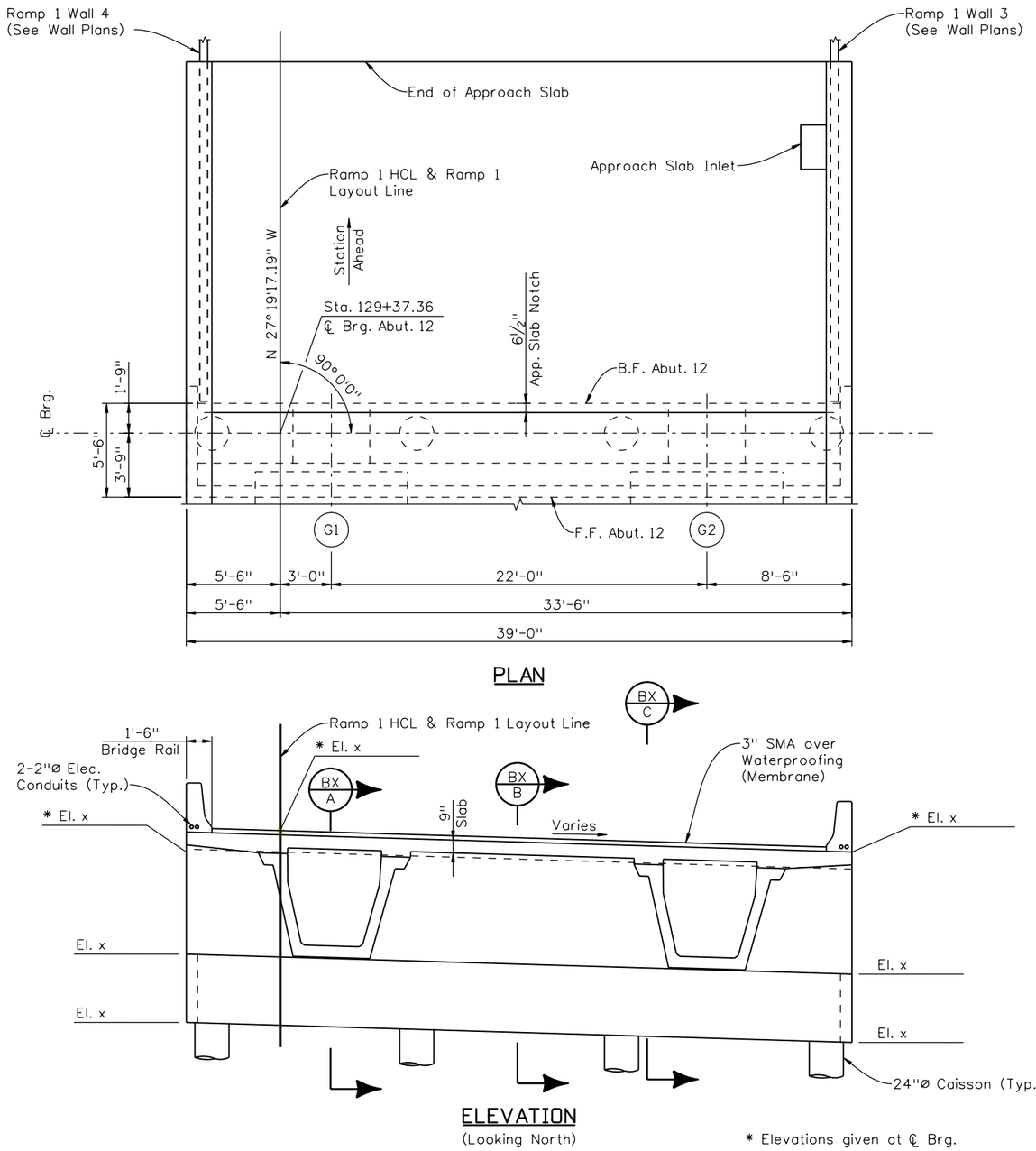

Print Date: 9/27/2010	Sheet Revisions			Colorado Department of Transportation	As Constructed	I-25/SANTA FE INTERCHANGE RAMP 1 FLYOVER ABUTMENT 12 PLAN & ELEVATION		Project No./Code
File Name: 16311BRDG_PH2_F-16-XR_Abut12.dgn	Date:	Comments	Init.	2000 South Holly Street Denver, CO 80222 Phone: 303-972-9112 FAX: 303-972-9114	No Revisions:	Designer: x	Structure Numbers: F-16-XR	IM 0254-394
Horiz. Scale: 1:1 Vert. Scale: As Noted				Region 6 RLB	Revised:	Detailer: K. Soellner		16311
Unit Information Unit Leader Initials					Void:	Sheet Subset: Bridge	Subset Sheets: XXX of XX	Sheet Number 125
Summit Engineering Group, Incorporated CONSULTING STRUCTURAL ENGINEERS 10822 Teller Drive Suite 330 Littleton, CO 80127								

Revision Dates: MM/YY (Preliminary Stage Only)

Design	INITIAL	DATE	Detail	INITIAL	DATE	Quantities	INITIAL	DATE
Designed By			Detailed By	KJS	08/10	Quantities By		
Checked By			Checked By			Checked By		

soellner 1:47:09 PM K:\08276\16311\Phase 2\Bridge\Drawings\16311BRDG_PH2_F-16-XR_Abut12.dgn
9/27/2010 CDOT-PDFDraftQuality_XM.pltcfg *

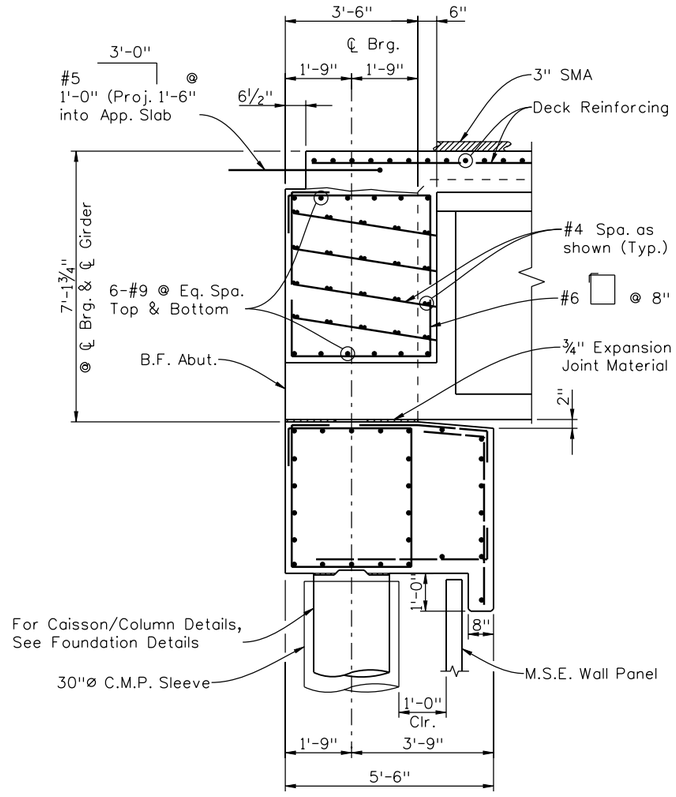

SECTION A

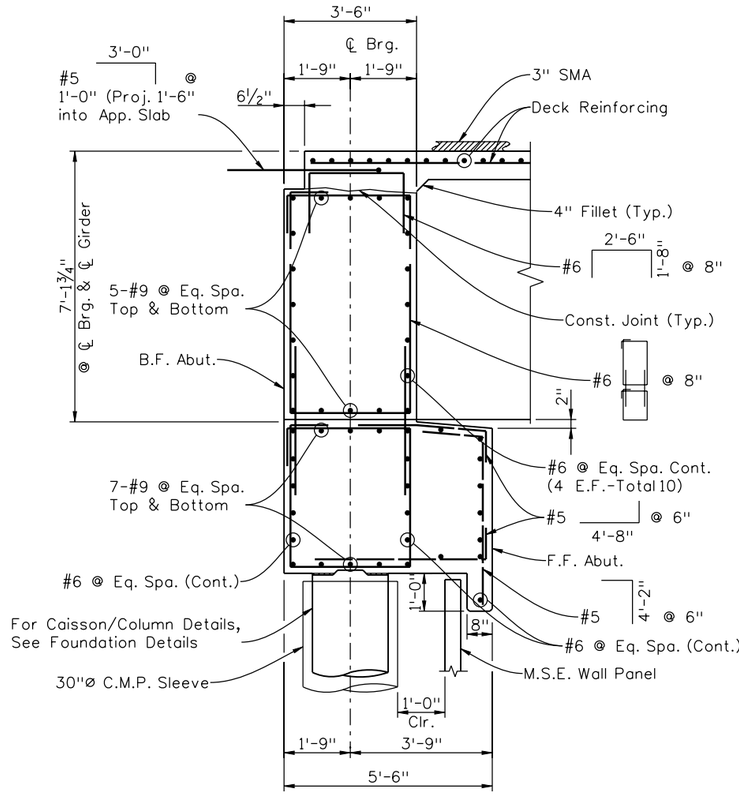

SECTION B

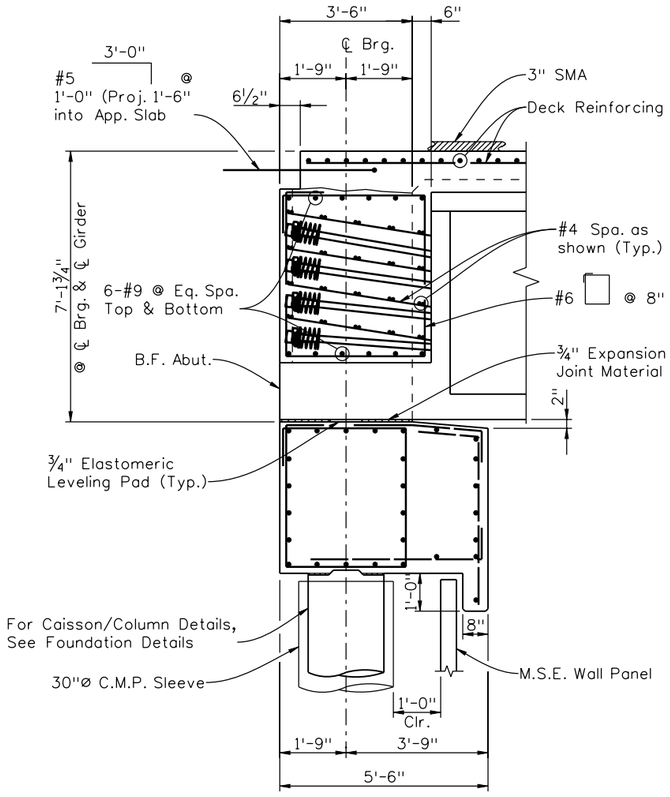

SECTION C

NOTES:

1. Elastomeric Bearing Pad and Expansion Joint Material shall not be paid for separately, but shall be included in Item 618 Prestressed Concrete U Girder (Pre-tensioned and Post-tensioned).
2. All Abutment and Wingwall Concrete shall be Class D (Bridge).

Revision Dates (Preliminary Stage Only): MM/YY

Design	INITIAL	DATE	Detail	INITIAL	DATE	Quantities	INITIAL	DATE
Designed By			Detailed By	KJS	08/10	Quantities By		
Checked By			Checked By			Checked By		

soellner 1:47:12 PM K:\08276\16311\Phase 2\Bridge\Drawings\16311BRDG_PH2_F-16-XR_Abut12Details.dgn
9/27/2010 CDOT-PDFDraftQuality_XM.pltcfg *

Print Date: 9/27/2010
File Name: 16311BRDG_PH2_F-16-XR_Abut12Details.dgn
Horiz. Scale: 1:1 Vert. Scale: As Noted
Unit Information Unit Leader Initials

Summit Engineering Group, Incorporated — Consulting Structural Engineers
10822 Toller Drive Suite 330
Littleton, CO 80127

Sheet Revisions		
Date:	Comments	Init.

Colorado Department of Transportation
DOT — Department of Transportation
2000 South Holly Street
Denver, CO 80222
Phone: 303-972-9112 FAX: 303-972-9114
Region 6 RLB

As Constructed
No Revisions:
Revised:
Void:

I-25/SANTA FE INTERCHANGE
RAMP 1 FLYOVER
ABUTMENT 12 DETAILS

Designer: x
Detailer: K. Soellner
Sheet Subset: Bridge
Structure Numbers: F-16-XR
Subset Sheets: XXX of XX

Project No./Code
IM 0254-394
16311
Sheet Number 126

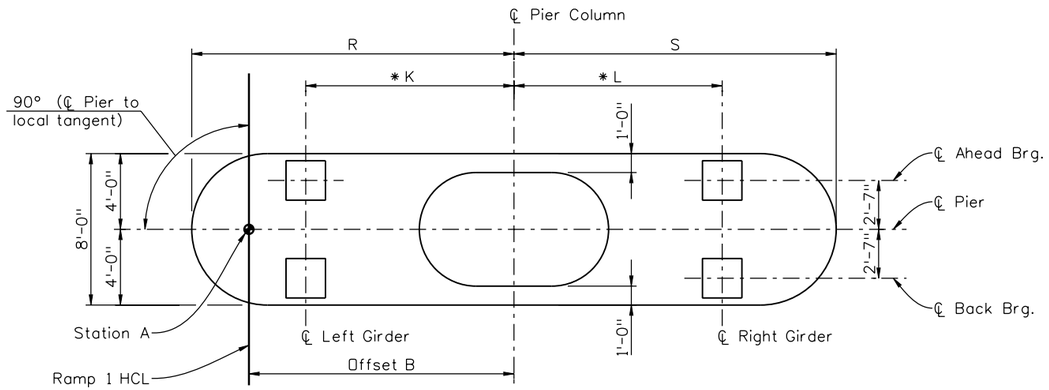

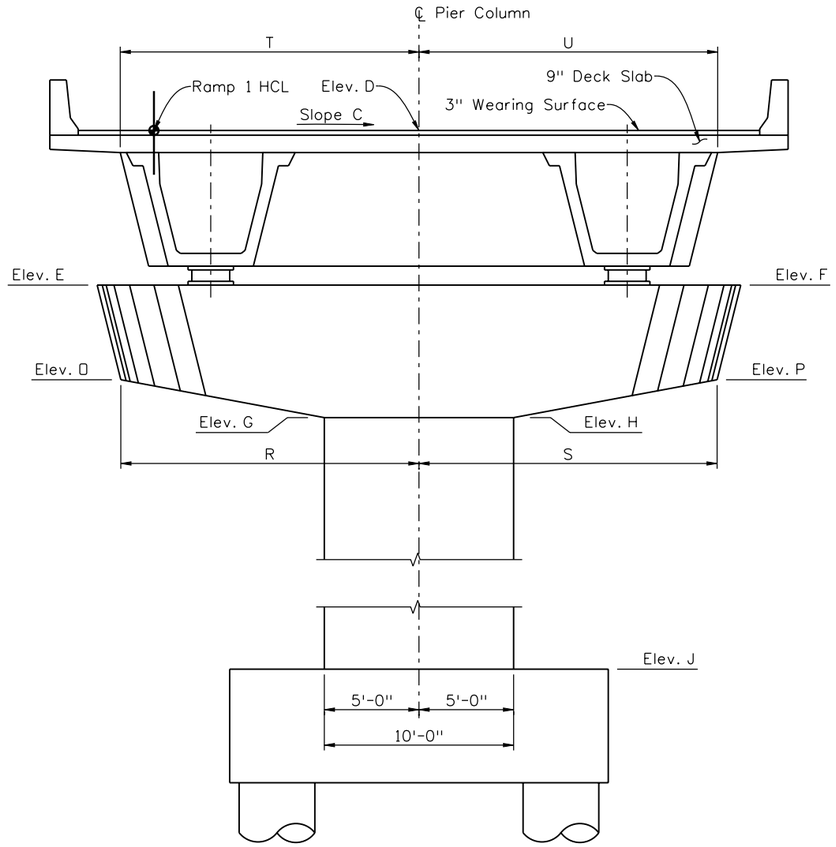

EXPANSION PIER
(PIERS 4 & 8)

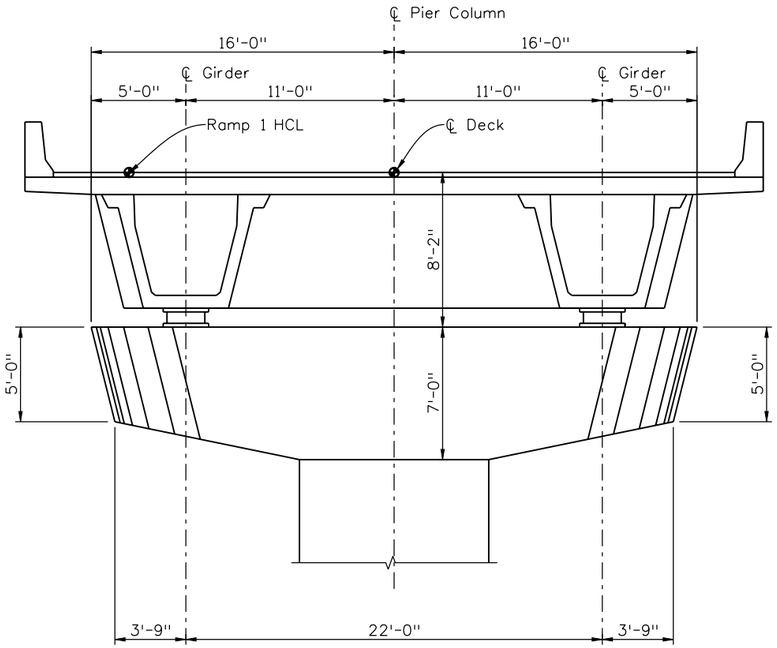

LOCATION	STA. A	OFFSET B	SLOPE C	ELEV. D	ELEV. E	ELEV. F	ELEV. G	ELEV. H	ELEV. J	K	L	ELEV. O	ELEV. P	R	S	T	U
PIER 4	116+71.11	TBD	-2.50%	TBD													
PIER 8	123+22.78	TBD	3.40%	TBD													

NOTES:

* 1. Dimensions K & L are measured horizontally @ bottom of girder.

2. All Girders are assumed to be 22'-0" ℄ to ℄ along the slope.

3. Elevations are @ ℄ Pier.

Revision Dates MM/YY (Preliminary Stage Only)

Design	INITIAL	DATE	Detail	INITIAL	DATE	Quantities	INITIAL	DATE
Designed By			Detailed By	KJS	08/10	Quantities By		
Checked By			Checked By			Checked By		

soellner 1:47:16 PM K:\08276\16311\Phase 2\Bridge\Drawings\16311BRDG_PH2_F-16-XR_PierExp01.dgn
9/27/2010 CDOT-PDFDraftQuality_XM.pltcfg *

Print Date: 9/27/2010
File Name: 16311BRDG_PH2_F-16-XR_PierExp01.dgn
Horiz. Scale: 1:1 Vert. Scale: As Noted
Unit Information Unit Leader Initials

Summit Engineering Group, Incorporated — Consulting Structural Engineers
10822 Toller Drive Suite 330
Littleton, CO 80127

Sheet Revisions

Date:	Comments	Init.

Colorado Department of Transportation
DOT — Department of Transportation
2000 South Holly Street
Denver, CO 80222
Phone: 303-972-9112 FAX: 303-972-9114
Region 6 RLB

As Constructed
No Revisions:
Revised:
Void:

I-25/SANTA FE INTERCHANGE
RAMP 1 FLYOVER
EXPANSION PIER DETAILS (1 OF 6)

Designer: x
Detailer: K. Soellner
Sheet Subset: Bridge
Structure Numbers: F-16-XR
Subset Sheets: XXX of XX

Project No./Code
IM 0254-394
16311
Sheet Number 127

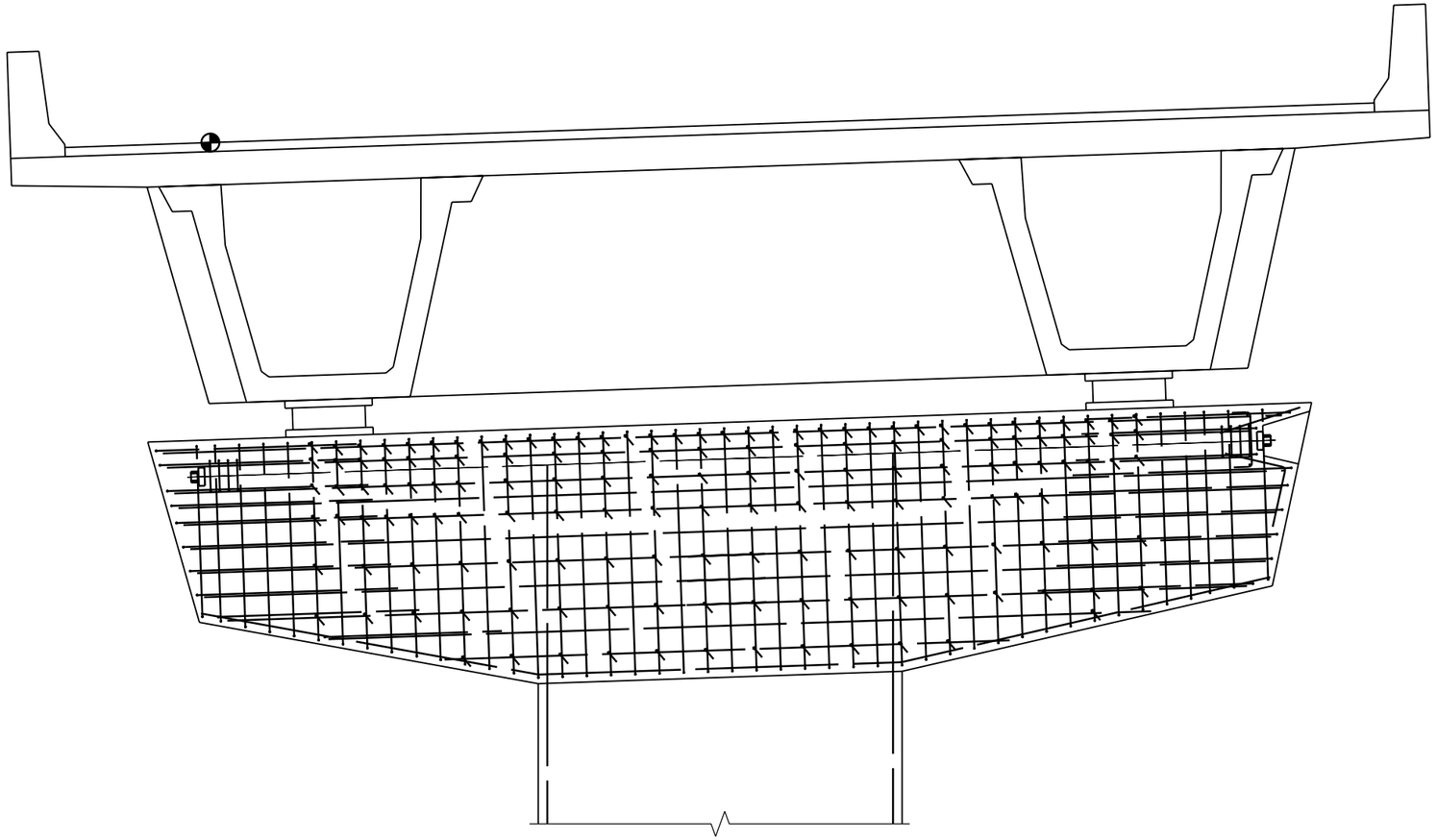

ELEVATION - EXPANSION PIER CAP

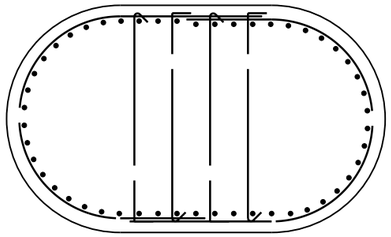

SECTION E

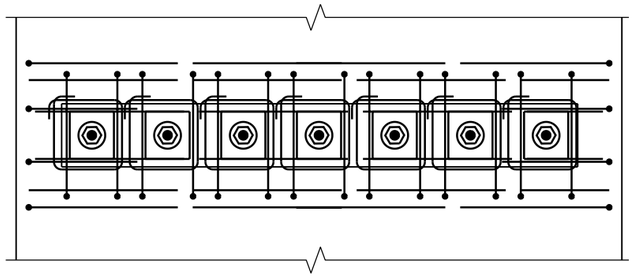

SECTION D

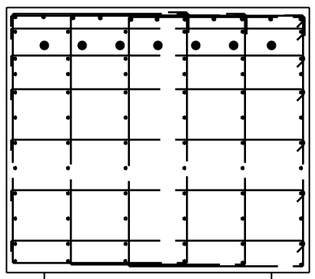

SECTION A

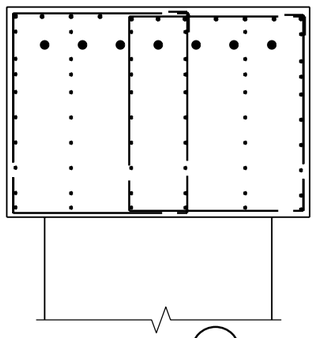

SECTION B

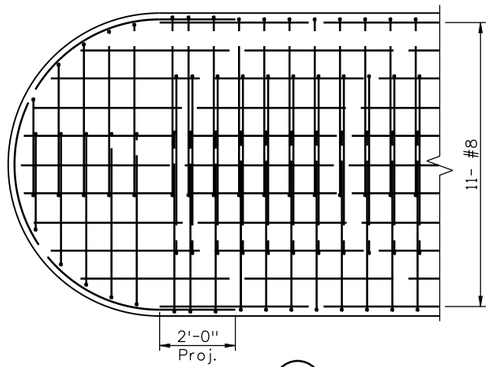

SECTION C

NOTES:

1. Concrete shall be Class D, F'c = 4500 psi at 28 days.
2. Concrete shall obtain a minimum strength of 3500 psi prior to stressing.
3. Minimum guaranteed ultimate stress of PT bars is 150 ksi.
4. PT bars, ducts and all hardware shall be placed and secured in the forms prior to casting pier caps.
5. PT bars shall be stressed from one end to a jacking force (Pjack) of 178 kips each (75% ULT).
6. Interior bars shall be stressed first.
7. Bars shall be grouted within 7 days of stressing.

Design	INITIAL	DATE
Designed By		
Checked By		

Detail	INITIAL	DATE
Detailed By	KJS	08/10
Checked By		

Quantities	INITIAL	DATE
Quantities By		
Checked By		

Revision Dates (Preliminary Stage Only)
MM/YY

soellner 1:47:19 PM K:\08276\16311\Phase 2\Bridge\Drawings\16311BRDG_PH2_F-16-XR_PierExp02.dgn
9/27/2010 CDOT-PDFDraftQuality_XM.pltcfg *

Print Date: 9/27/2010
File Name: 16311BRDG_PH2_F-16-XR_PierExp02.dgn
Horiz. Scale: 1:1 Vert. Scale: As Noted
Unit Information Unit Leader Initials

Summit Engineering Group, Incorporated
Consulting Structural Engineers
10822 Toller Drive Suite 330
Littleton, CO 80127

Sheet Revisions		
Date:	Comments	Init.

Colorado Department of Transportation
DOT Department of Transportation
2000 South Holly Street
Denver, CO 80222
Phone: 303-972-9112 FAX: 303-972-9114
Region 6 RLB

As Constructed
No Revisions:
Revised:
Void:

I-25/SANTA FE INTERCHANGE
RAMP 1 FLYOVER
EXPANSION PIER DETAILS (2 OF 6)

Designer:	x	Structure Numbers	F-16-XR
Detailer:	K. Soellner		
Sheet Subset:	Bridge	Subset Sheets:	XXX of XX

Project No./Code	
IM 0254-394	
16311	
Sheet Number	128

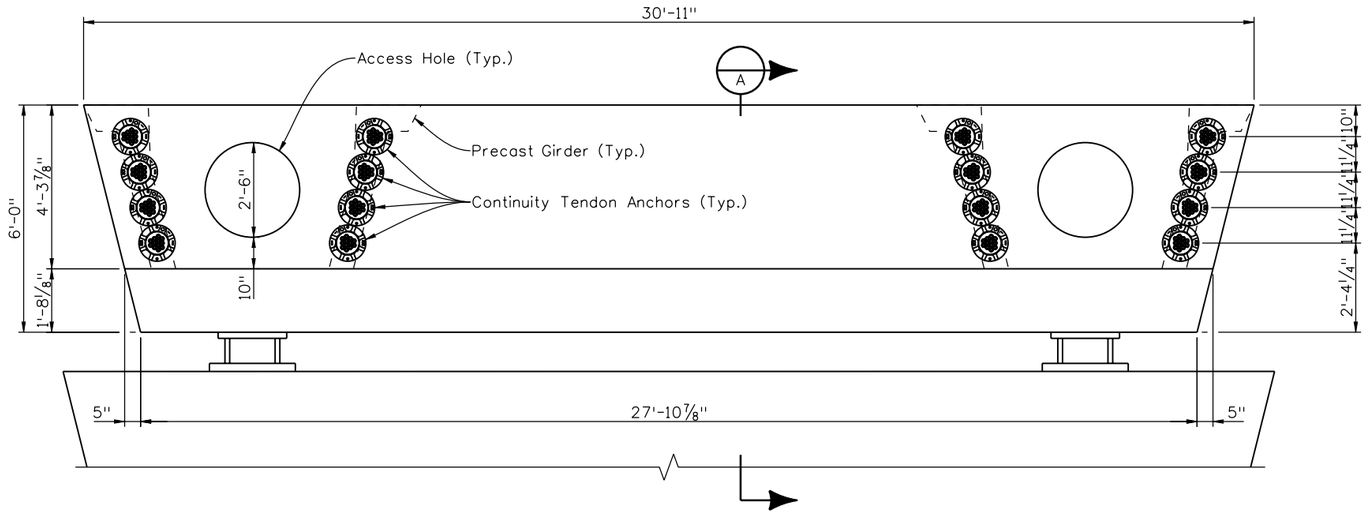

ELEVATION @ EXPANSION PIERS 4 & 8 DIAPHRAGM
1ST STAGE

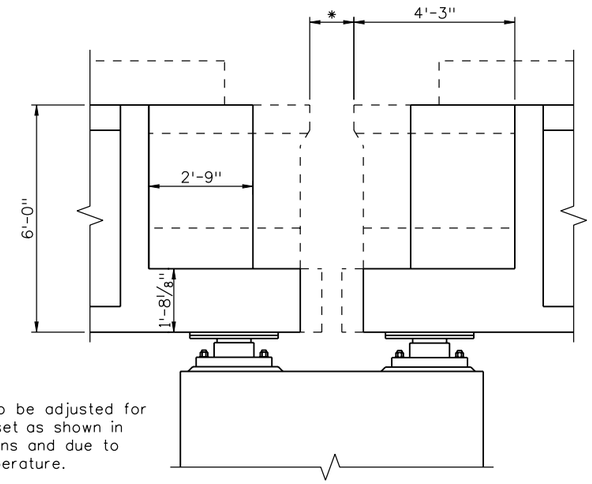

* Dimension to be adjusted for bearing offset as shown in contract plans and due to to set temperature.

SECTION A

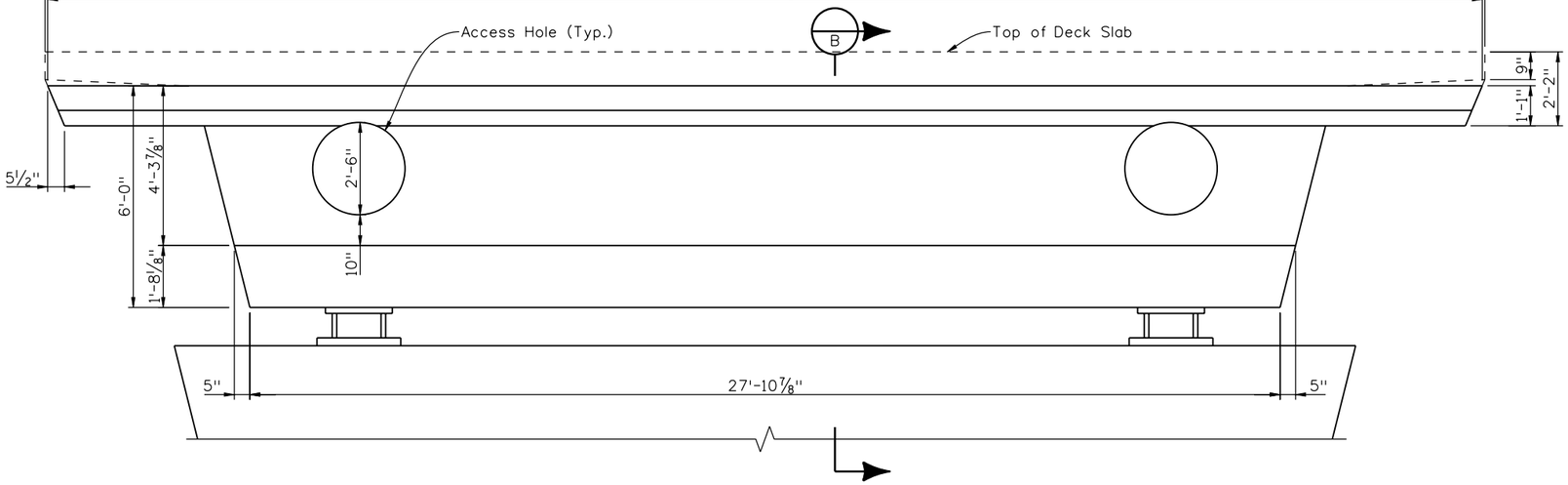

ELEVATION @ EXPANSION PIERS 4 & 8 DIAPHRAGM
2ND STAGE

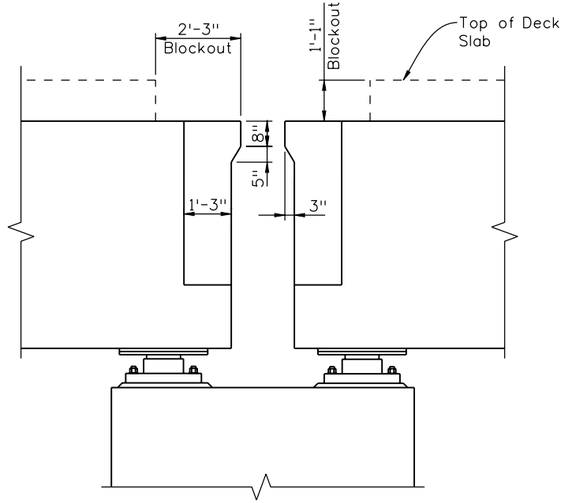

SECTION B

NOTES:

1. PT Anchor locations are shown on the girder drawings.
2. Diaphragm concrete shall be Class D, 4500 psi.

Design			Detail			Quantities		
	INITIAL	DATE		INITIAL	DATE		INITIAL	DATE
Designed By			Detailed By	KJS	08/10	Quantities By		
Checked By			Checked By			Checked By		

Revision Dates (Preliminary Stage Only)
MM/YY

Print Date: 9/27/2010	Sheet Revisions		
File Name: 16311BRDG_PH2_F-16-XR_PierExp03.dgn	Date:	Comments	Init.
Horiz. Scale: 1:1 Vert. Scale: As Noted			
Unit Information Unit Leader Initials			
Summit Engineering Group, Incorporated — Consulting Structural Engineers — 10822 Toller Drive Suite 330 Littleton, CO 80127			

Colorado Department of Transportation
DOT — Department of Transportation
2000 South Holly Street
Denver, CO 80222
Phone: 303-972-9112 FAX: 303-972-9114
Region 6 RLB

As Constructed
No Revisions:
Revised:
Void:

I-25/SANTA FE INTERCHANGE
RAMP 1 FLYOVER
EXPANSION PIER DETAILS (3 OF 6)

Designer:	x	Structure Numbers	F-16-XR
Detailer:	K. Soellner		
Sheet Subset:	Bridge	Subset Sheets:	XXX of XX

Project No./Code
IM 0254-394
16311
Sheet Number 129

soellner 1:47:23 PM K:\08276\16311\Phase 2\Bridge\Drawings\16311BRDG_PH2_F-16-XR_PierExp03.dgn
9/27/2010 CDOT-PDFDraftQuality_XM.pltcfg *

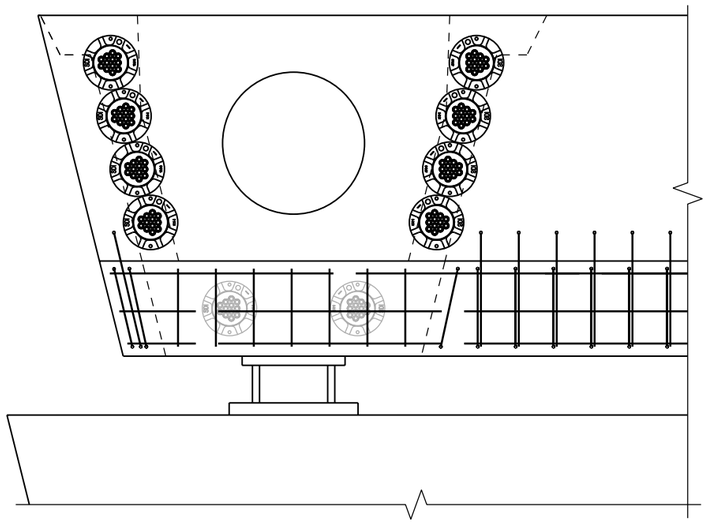

ELEVATION @ BOTTOM OF DIAPHRAGM

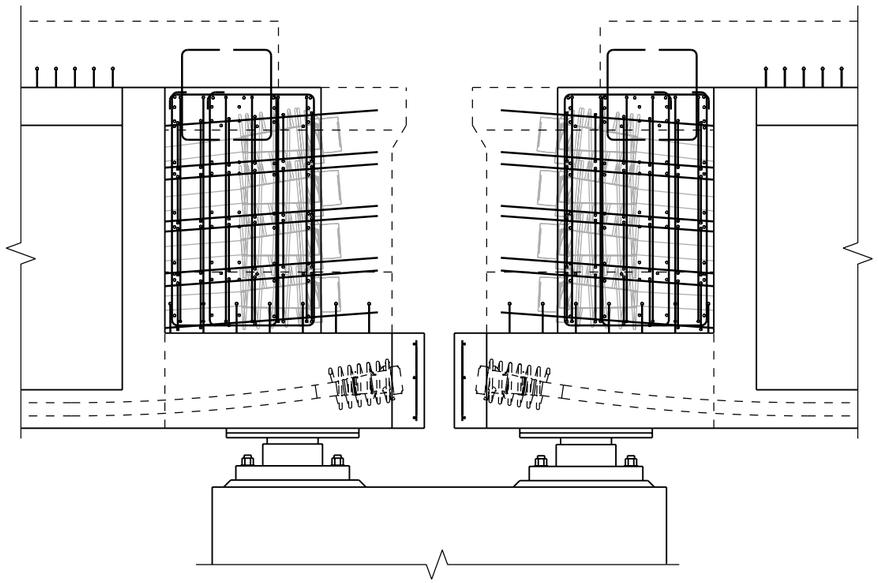

SECTION @ TENDON ANCHORS

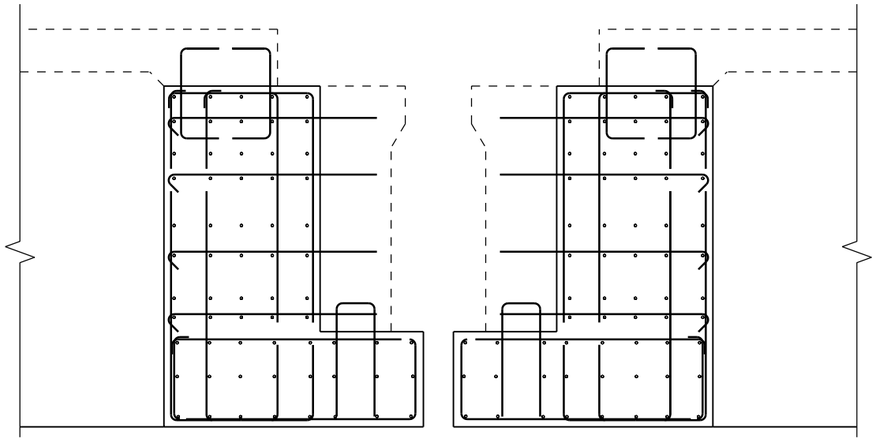

SECTION @ CENTER OF DIAPHRAGM

NOTES:

1. PT Anchor locations are shown on the girder drawings.
2. Diaphragm concrete shall be Class D, 4500 psi.
3. All reinforcing shall be Grade 60.

Design			Detail			Quantities		
	INITIAL	DATE		INITIAL	DATE		INITIAL	DATE
Designed By			Detailed By	KJS	08/10	Quantities By		
Checked By			Checked By			Checked By		

Revision Dates (Preliminary Stage Only)
MM/YY

Print Date: 9/27/2010	Sheet Revisions		
File Name: 16311BRDG_PH2_F-16-XR_PierExp04.dgn	Date:	Comments	Init.
Horiz. Scale: 1:1 Vert. Scale: As Noted			
Unit Information Unit Leader Initials			
Summit Engineering Group, Incorporated — Consulting Structural Engineers — 10822 Teller Drive Suite 330 Littleton, CO 80127			

Colorado Department of Transportation
DOT — Department of Transportation
2000 South Holly Street
Denver, CO 80222
Phone: 303-972-9112 FAX: 303-972-9114
Region 6 RLB

As Constructed	
No Revisions:	
Revised:	
Void:	

I-25/SANTA FE INTERCHANGE
RAMP 1 FLYOVER
EXPANSION PIER DETAILS (4 OF 6)

Designer:	x	Structure Numbers	F-16-XR
Detailer:	K. Soellner		
Sheet Subset:	Bridge	Subset Sheets:	XXX of XX

Project No./Code
IM 0254-394
16311
Sheet Number 130

soellner 1:47:27 PM K:\08276\16311\Phase 2\Bridge\Drawings\16311BRDG_PH2_F-16-XR_PierExp04.dgn
9/27/2010 CDOT-PDFDraftQuality_XM.pltcfg *

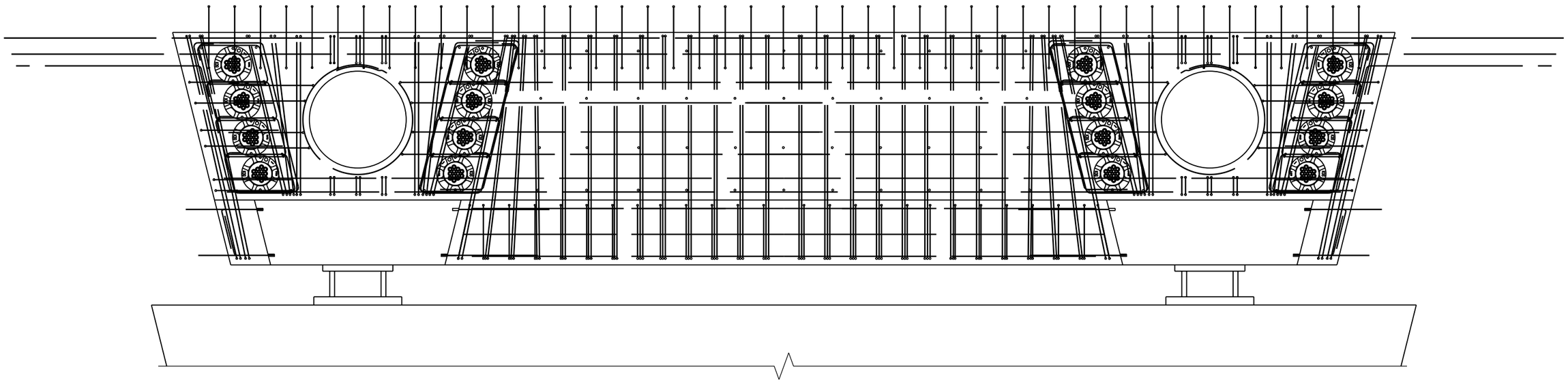

ELEVATION @ EXPANSION PIERS 5 & 8
1ST STAGE DIAPHRAGM POUR

NOTES:

1. PT Anchor locations are shown on the girder drawings.
2. Diaphragm concrete shall be Class D, 4500 psi.
3. All reinforcing shall be Grade 60.

Revision Dates (Preliminary Stage Only)

Rev.	MM/YY

Design	INITIAL	DATE
Designed By		
Checked By		

Detail	INITIAL	DATE
Detailed By	KJS	08/10
Checked By		

Quantities	INITIAL	DATE
Quantities By		
Checked By		

soellner 1:47:30 PM K:\08276\16311\Phase 2\Bridge\Drawings\16311BRDG_PH2_F-16-XR_PierExp05.dgn
9/27/2010 CDOT-PDFDraftQuality_XM.pltcfg *

Print Date: 9/27/2010
File Name: 16311BRDG_PH2_F-16-XR_PierExp05.dgn
Horiz. Scale: 1:1 Vert. Scale: As Noted
Unit Information Unit Leader Initials

Summit Engineering Group, Incorporated
CONSULTING STRUCTURAL ENGINEERS
10822 Teller Drive Suite 330
Littleton, CO 80127

Sheet Revisions		
Date:	Comments	Init.

Colorado Department of Transportation
DEPARTMENT OF TRANSPORTATION
2000 South Holly Street
Denver, CO 80222
Phone: 303-972-9112 FAX: 303-972-9114
Region 6 RLB

As Constructed
No Revisions:
Revised:
Void:

I-25/SANTA FE INTERCHANGE
RAMP 1 FLYOVER
EXPANSION PIER DETAILS (5 OF 6)

Designer: x
Detailer: K. Soellner
Sheet Subset: Bridge
Structure Numbers: F-16-XR
Subset Sheets: XXX of XX

Project No./Code
IM 0254-394
16311
Sheet Number 131

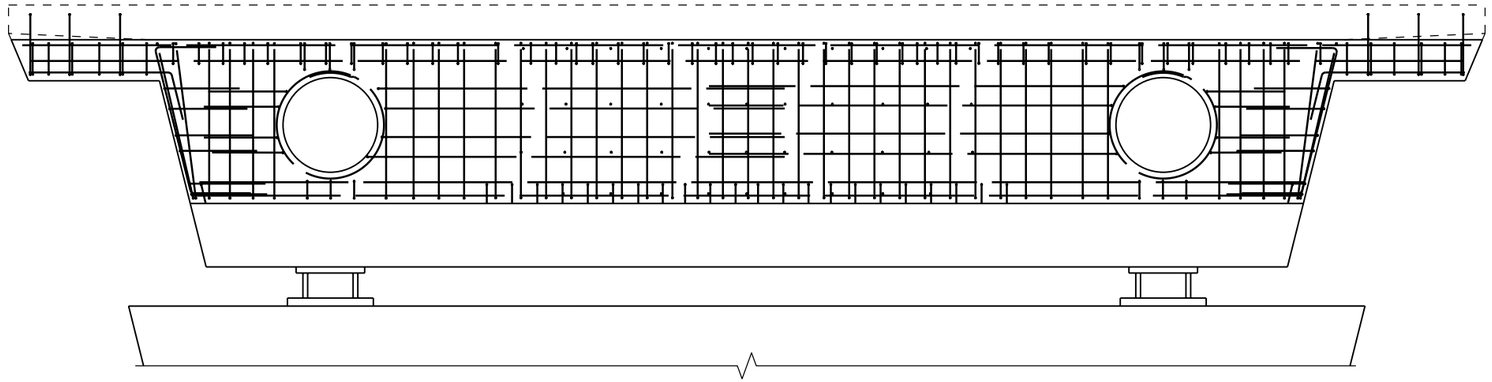

ELEVATION @ EXPANSION PIERS 5 & 8
2ND STAGE DIAPHRAGM POUR

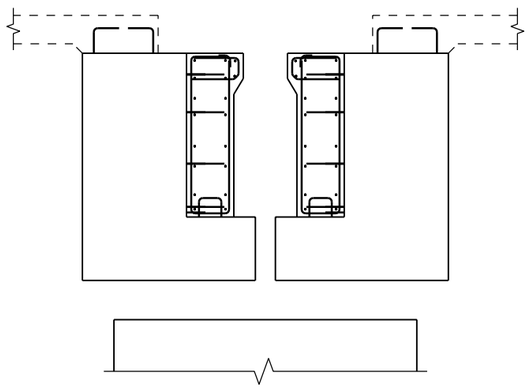

SECTION @ CENTER OF DIAPHRAGM

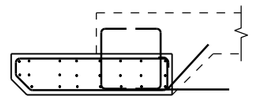

SECTION @ OVERHANG

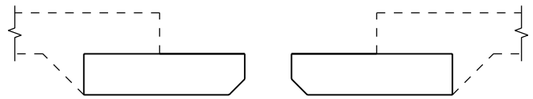

SECTION @ OVERHANG
(Dimensions Only)

NOTES:

1. PT Anchor locations are shown on the girder drawings.
2. Diaphragm concrete shall be Class D, 4500 psi.
3. All reinforcing shall be Grade 60.

Design	INITIAL	DATE
Designed By		
Checked By		

Detail	INITIAL	DATE
Detailed By	KJS	08/10
Checked By		

Quantities	INITIAL	DATE
Quantities By		
Checked By		

Revision Dates (Preliminary Stage Only)
MM/YY

Print Date: 9/27/2010
File Name: 16311BRDG_PH2_F-16-XR_PierExp06.dgn
Horiz. Scale: 1:1 Vert. Scale: As Noted
Unit Information Unit Leader Initials

Summit Engineering Group, Incorporated
CONSULTING STRUCTURAL ENGINEERS
10822 Teller Drive Suite 330
Littleton, CO 80127

Sheet Revisions		
Date:	Comments	Init.

Colorado Department of Transportation
DEPARTMENT OF TRANSPORTATION
2000 South Holly Street
Denver, CO 80222
Phone: 303-972-9112 FAX: 303-972-9114
Region 6 RLB

As Constructed
No Revisions:
Revised:
Void:

I-25/SANTA FE INTERCHANGE
RAMP 1 FLYOVER
EXPANSION PIER DETAILS (6 OF 6)

Designer: x	Structure Numbers	F-16-XR
Detailer: K. Soellner		
Sheet Subset: Bridge	Subset Sheets: XXX of XX	

Project No./Code
IM 0254-394
16311
Sheet Number 132

soellner 1:47:34 PM K:\08276\16311\Phase 2\Bridge\Drawings\16311BRDG_PH2_F-16-XR_PierExp06.dgn
9/27/2010 CDOT-PDFDraftQuality_XM.pltcfg *

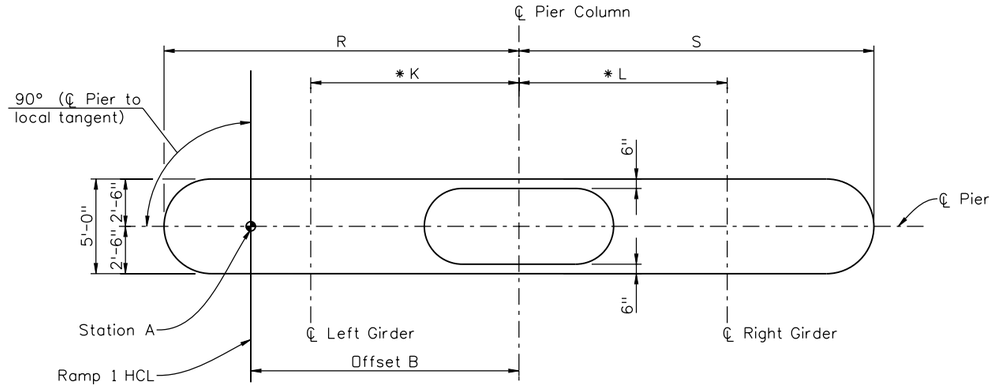

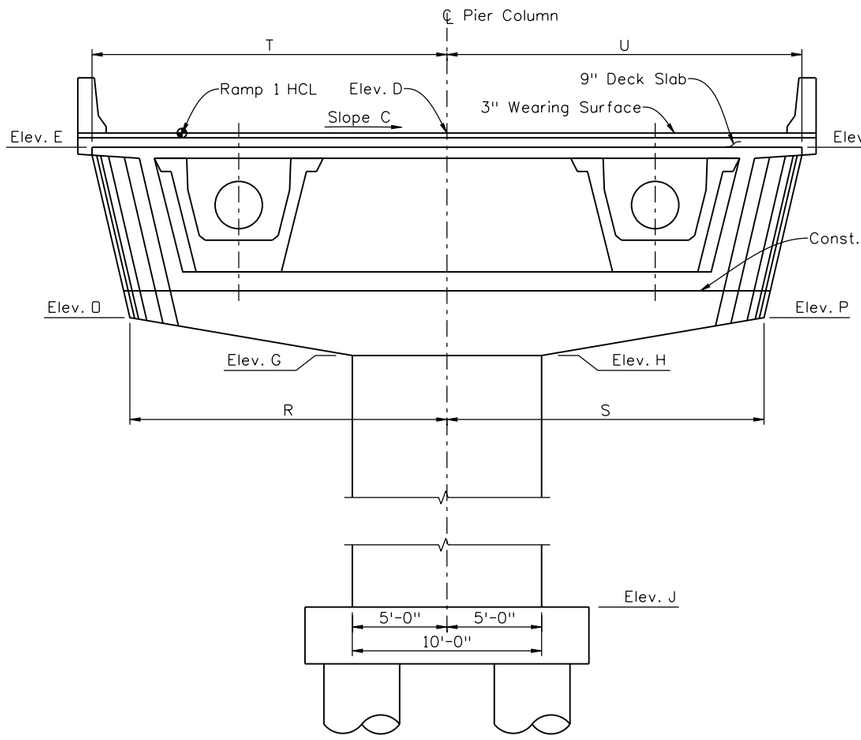

INTERIOR PIER (PIERS 2,3,6,7,9,10 & 11)

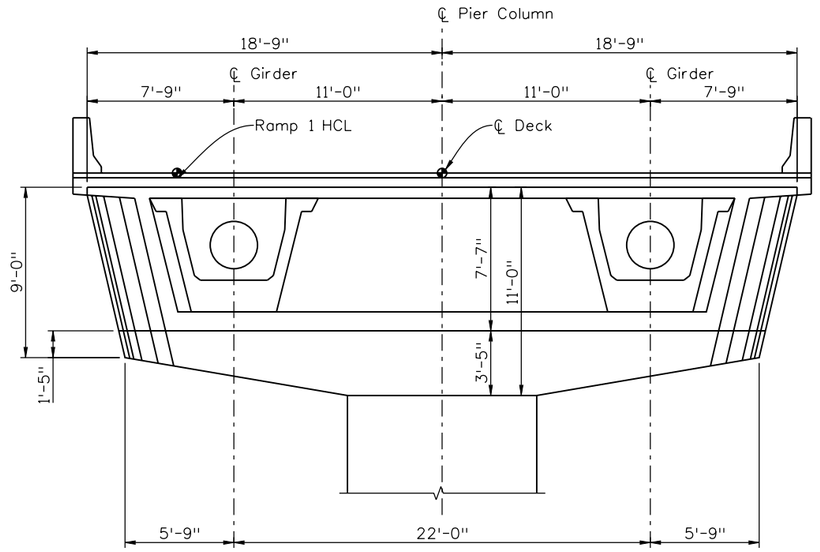

LOCATION	STA. A	OFFSET B	SLOPE C	ELEV. D	ELEV. E	ELEV. F	ELEV. G	ELEV. H	ELEV. J	K	L	ELEV. O	ELEV. P	R	S	T	U
PIER 2	113+32.44	TBD	-3.00%	TBD													
PIER 3	115+23.69	TBD	-3.00%	TBD													
PIER 6	119+90.86	TBD	0.53%	TBD													
PIER 7	121+84.11	TBD	3.40%	TBD													
PIER 9	124+42.11	TBD	3.40%	TBD													
PIER 10	126+19.11	TBD	0.77%	TBD													
PIER 11	128+06.11	TBD	-2.00	TBD													

NOTES:

* 1. Dimensions K & L are measured horizontally @ bottom of girder.

2. All Girders are assumed to be 22'-0" ℄ to ℄ along the slope.

3. Elevations are @ ℄ Pier.

Revision Dates (Preliminary Stage Only): MM/YY

	Design		Detail		Quantities	
	INITIAL	DATE	INITIAL	DATE	INITIAL	DATE
Designed By			KJS	08/10		
Detailed By						
Quantities By						
Checked By						
Checked By						
Checked By						

soellner 1:47:38 PM K:\08276\16311\Phase 2\Bridge\Drawings\16311BRDG_PH2_F-16-XR_PierInterior01.dgn
9/27/2010 CDOT-PDFDraftQuality_XM.pltcfg *

Print Date: 9/27/2010
File Name: 16311BRDG_PH2_F-16-XR_PierInterior01.dgn
Horiz. Scale: 1:1 Vert. Scale: As Noted
Unit Information Unit Leader Initials

Summit Engineering Group, Incorporated — Consulting Structural Engineers
10822 Toller Drive Suite 330
Littleton, CO 80127

Sheet Revisions

Date:	Comments	Init.

Colorado Department of Transportation
2000 South Holly Street
Denver, CO 80222
Phone: 303-972-9112 FAX: 303-972-9114
Region 6 RLB

As Constructed
No Revisions:
Revised:
Void:

I-25/SANTA FE INTERCHANGE
RAMP 1 FLYOVER
INTERIOR PIER DETAILS (1 OF 3)

Designer: x
Detailer: K. Soellner
Sheet Subset: Bridge
Structure Numbers: F-16-XR
Subset Sheets: XXX of XX

Project No./Code
IM 0254-394
16311
Sheet Number 133

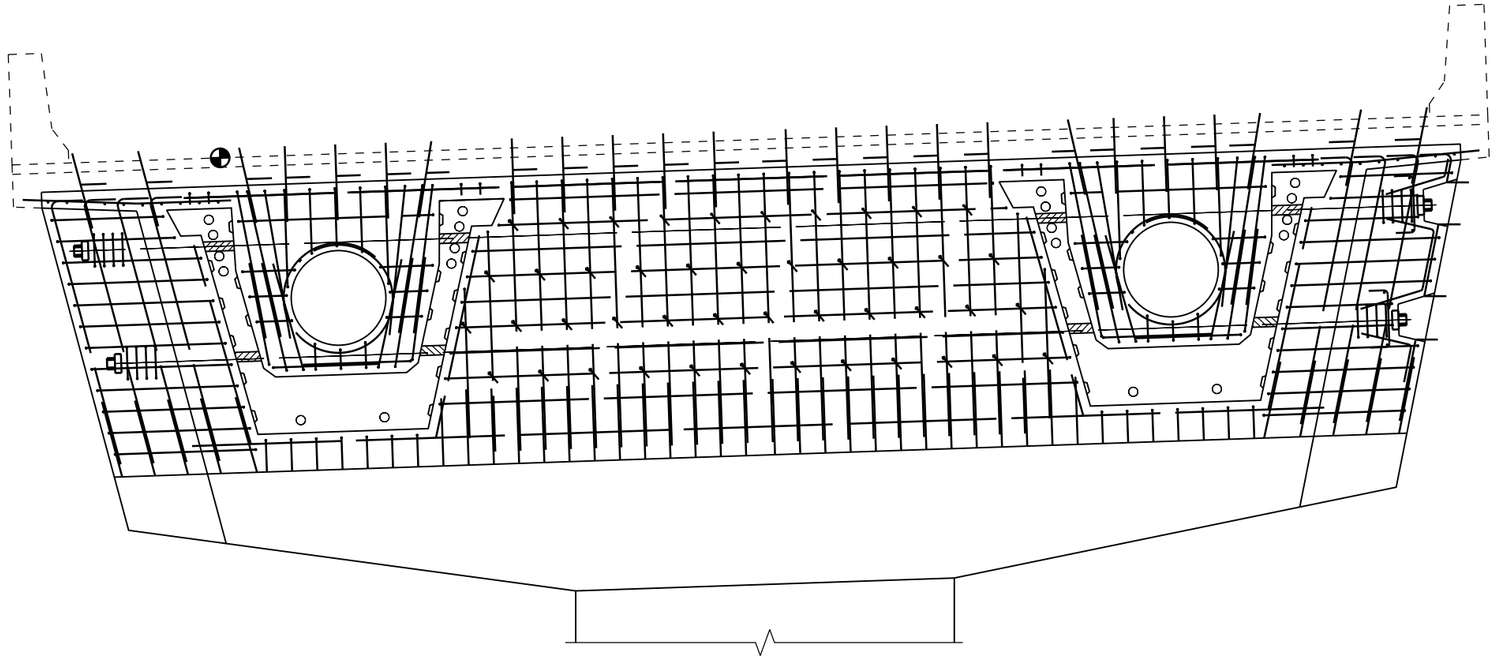

ELEVATION - INTERIOR PIER DIAPHRAGM

(Piers 2, 3, 5, 6, 7, 9, 10 & 11)
(Typical Deck, Bottom Slab and Haunch Reinforcement not shown)

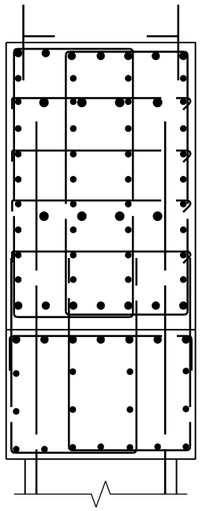

SECTION BXX / XX

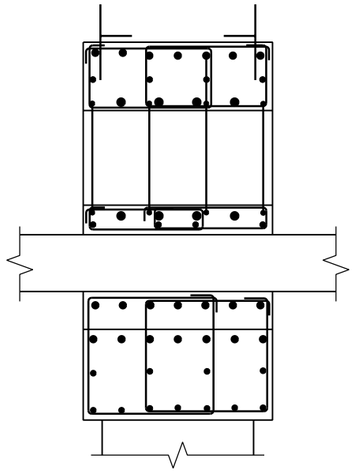

SECTION BXX / XX

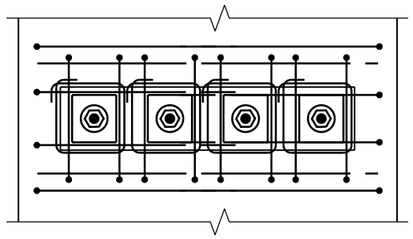

SECTION BXX / XX

NOTES:

1. Concrete shall be Class D, F'c = 4500 psi at 28 days.
2. Concrete shall obtain a minimum strength of 3500 psi prior to stressing.
3. Minimum guaranteed ultimate stress of PT bars is 150 ksi.
4. PT bars, ducts and all hardware shall be placed and secured in the forms prior to casting pier caps.
5. PT bars shall be stressed from one end to a jacking force (Pjack) of 178 kips each (75% ULT).
6. Interior bars shall be stressed first.
7. Bars shall be grouted within 7 days of stressing.

Revision Dates (Preliminary Stage Only)

MM/YY								

Design			Detail				Quantities			
	INITIAL	DATE		INITIAL	DATE		INITIAL	DATE
Designed By			Detailed By	KJS	08/10	Quantities By		
Checked By			Checked By			Checked By		

soellner 1:47:41 PM K:\08276\16311\Phase 2\Bridge\Drawings\16311BRDG_PH2_F-16-XR_PierInterior02.dgn
9/27/2010 CDOT-PDFDraftQuality_XM.pltcfg *

Print Date:	9/27/2010
File Name:	16311BRDG_PH2_F-16-XR_PierInterior02.dgn
Horiz. Scale:	1:1
Vert. Scale:	As Noted
Unit Information	Unit Leader Initials

Summit Engineering Group, Incorporated — Consulting Structural Engineers
10822 Teller Drive Suite 330
Littleton, CO 80127

Sheet Revisions		
Date:	Comments	Init.

Colorado Department of Transportation
DOT — Department of Transportation
2000 South Holly Street
Denver, CO 80222
Phone: 303-972-9112 FAX: 303-972-9114
Region 6 RLB

As Constructed	
No Revisions:	
Revised:	
Void:	

I-25/SANTA FE INTERCHANGE
RAMP 1 FLYOVER
INTERIOR PIER DETAILS (2 OF 3)

Designer:	x	Structure Numbers	F-16-XR
Detailer:	K. Soellner		
Sheet Subset:	Bridge	Subset Sheets:	XXX of XX

Project No./Code	
IM 0254-394	
16311	
Sheet Number	134

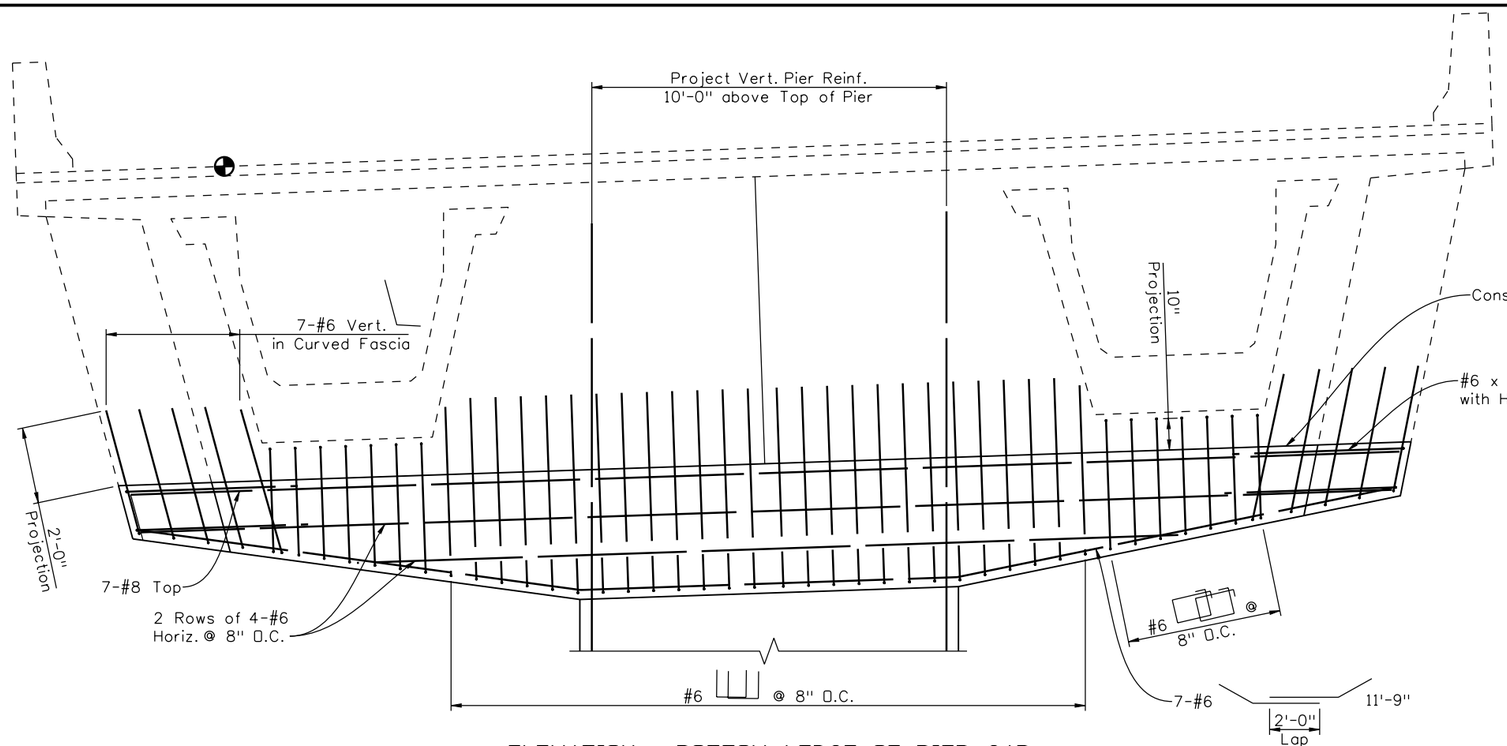

ELEVATION - BOTTOM LEDGE OF PIER CAP

(Piers 2, 3, 6, 7, 9, 10, & 11)

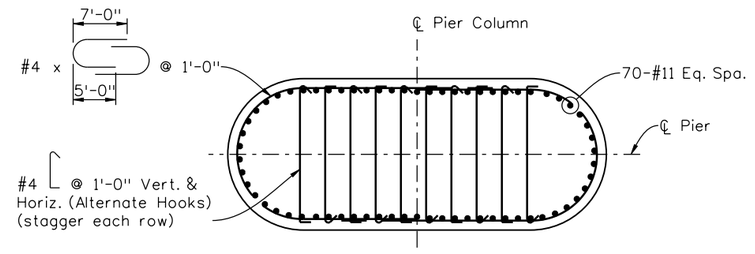

PLAN VIEW
PIER COLUMN REINFORCEMENT

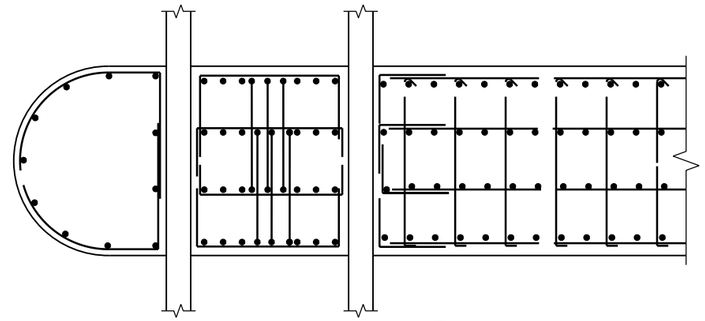

SECTION BXX / XX

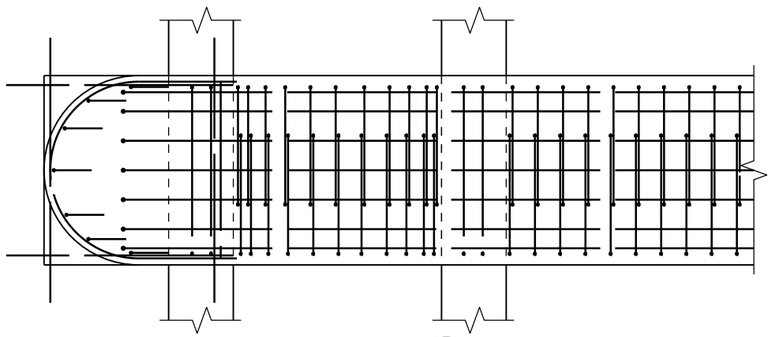

SECTION BXX / XX

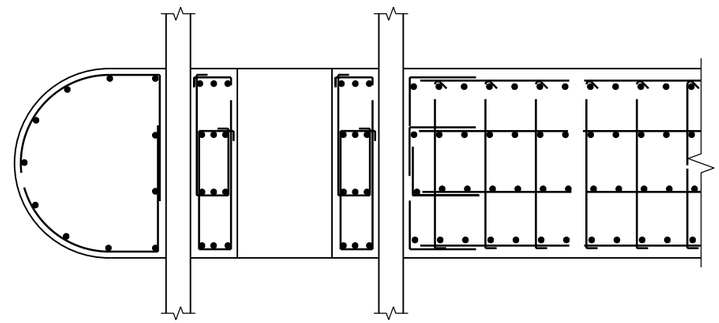

SECTION BXX / XX

Design	INITIAL	DATE
Designed By		
Checked By		

Detail	INITIAL	DATE
Detailed By	KJS	08/10
Checked By		

Quantities	INITIAL	DATE
Quantities By		
Checked By		

Revision Dates (Preliminary Stage Only)
MM/YY

Print Date: 9/27/2010
File Name: 16311BRDG_PH2_F-16-XR_PierInterior03.dgn
Horiz. Scale: 1:1 Vert. Scale: As Noted
Unit Information Unit Leader Initials

Summit Engineering Group, Incorporated
Consulting Structural Engineers
10822 Teller Drive Suite 330
Littleton, CO 80127

Sheet Revisions		
Date:	Comments	Init.

Colorado Department of Transportation
DOT Department of Transportation
2000 South Holly Street
Denver, CO 80222
Phone: 303-972-9112 FAX: 303-972-9114
Region 6 RLB

As Constructed
No Revisions:
Revised:
Void:

I-25/SANTA FE INTERCHANGE
RAMP 1 FLYOVER
INTERIOR PIER DETAILS (3 OF 3)

Designer: x
Detailer: K. Soellner
Sheet Subset: Bridge
Structure Numbers: F-16-XR
Subset Sheets: XXX of XX

Project No./Code
IM 0254-394
16311
Sheet Number 135

soellner 1:47:45 PM K:\08276\16311\Phase 2\Bridge\Drawings\16311BRDG_PH2_F-16-XR_PierInterior03.dgn
9/27/2010 CDOT-PDFDraftQuality_XM.pltcfg *

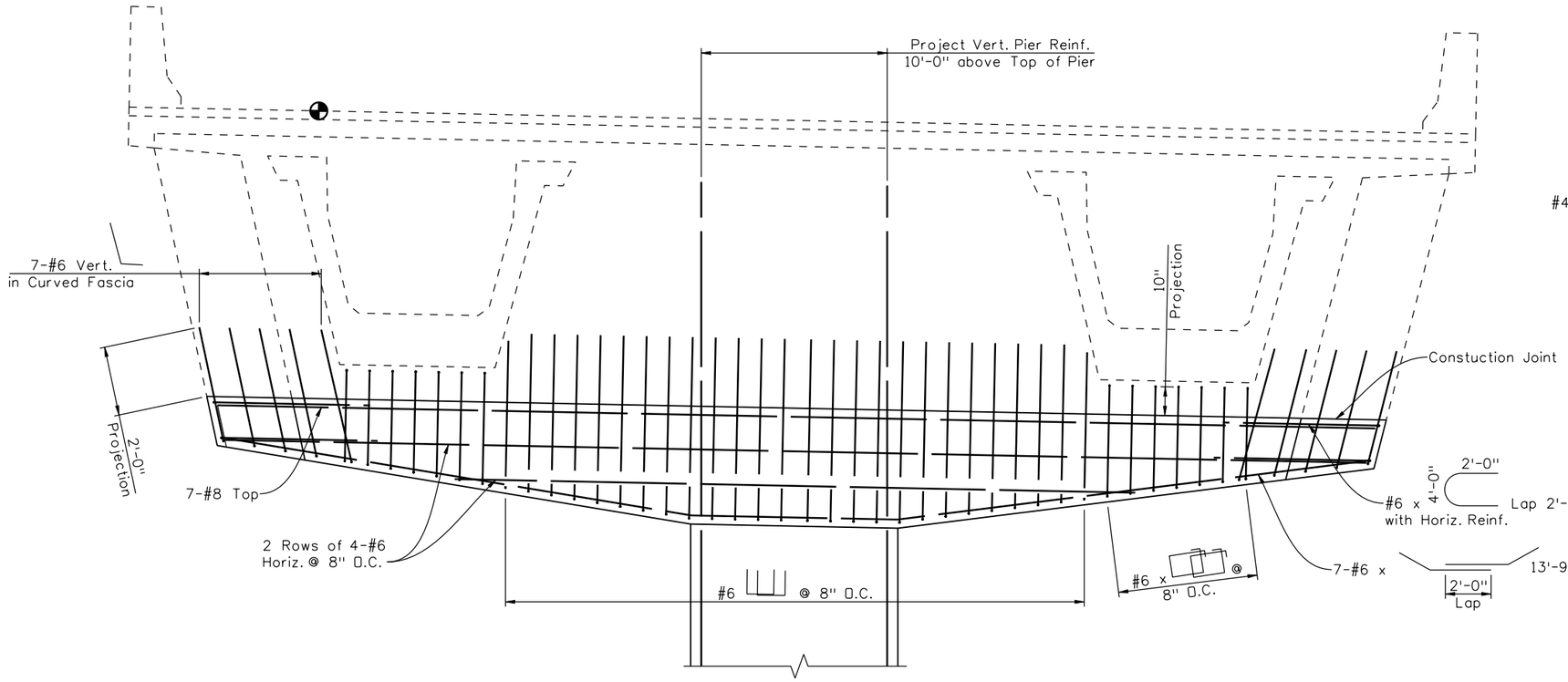

ELEVATION - BOTTOM LEDGE OF PIER CAP
(Pier 5)

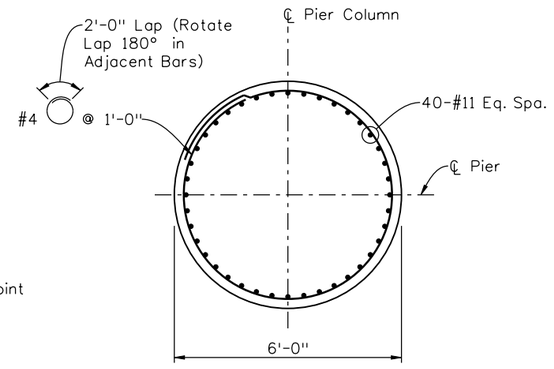

PLAN VIEW
PIER COLUMN REINFORCEMENT

NOTE:

1. See Interior Pier Details for diaphragm information not shown.

Design	INITIAL	DATE
Designed By		
Checked By		

Detail	INITIAL	DATE
Detailed By	KJS	08/10
Checked By		

Quantities	INITIAL	DATE
Quantities By		
Checked By		

Revision Dates (Preliminary Stage Only)
MM/YY

Print Date: 9/27/2010
File Name: 16311BRDG_PH2_F-16-XR_Pier5.dgn
Horiz. Scale: 1:1 Vert. Scale: As Noted
Unit Information Unit Leader Initials

Summit Engineering Group, Incorporated
CONSULTING STRUCTURAL ENGINEERS
10822 Teller Drive Suite 330
Littleton, CO 80127

Sheet Revisions		
Date:	Comments	Init.

Colorado Department of Transportation
DOT DEPARTMENT OF TRANSPORTATION
2000 South Holly Street
Denver, CO 80222
Phone: 303-972-9112 FAX: 303-972-9114
Region 6 RLB

As Constructed
No Revisions:
Revised:
Void:

I-25/SANTA FE INTERCHANGE
RAMP 1 FLYOVER
PIER 5 DETAILS

Designer: x
Detailer: K. Soellner
Sheet Subset: Bridge
Structure Numbers: F-16-XR
Subset Sheets: XXX of XX

Project No./Code
IM 0254-394
16311
Sheet Number 136

soellner 1:47:49 PM K:\08276\16311\Phase 2\Bridge\Drawings\16311BRDG_PH2_F-16-XR_Pier5.dgn
9/27/2010 CDOT-PDFDraftQuality_XM.pltcfg *

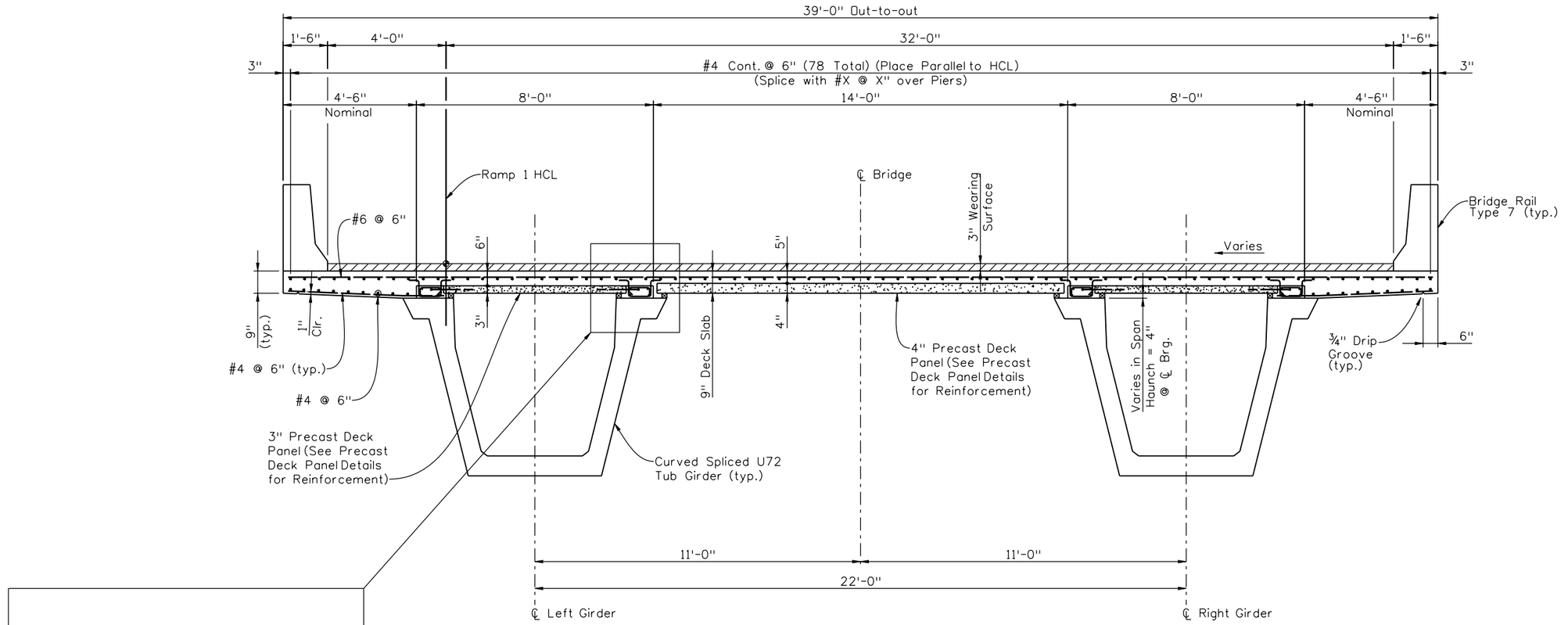

TYPICAL SECTION

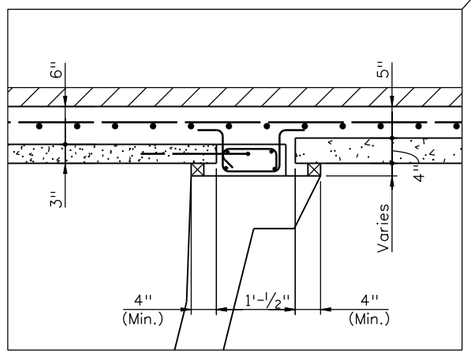

Revision Dates (Preliminary Stage Only)

Quantities	INITIAL	DATE
	Quantities By	
	Checked By	

Detail	INITIAL	DATE
	RAD	08/10
Detailed By	GAR	10/10
Checked By		

Design	INITIAL	DATE
	GAR	08/10
Designed By		
Checked By		

soellner 1:47:52 PM K:\08276\16311\Phase 2\Bridge\Drawings\16311BRDG_PH2_F-16-XR_Sup01.dgn
9/27/2010 CDOT-PDFDraftQuality_XM.pltcfg *

Print Date: 9/27/2010
File Name: 16311BRDG_PH2_F-16-XR_Sup01.dgn
Horiz. Scale: 1:1 Vert. Scale: As Noted
Unit Information Unit Leader Initials

Summit Engineering Group, Incorporated
Consulting Structural Engineers
10822 Teller Drive Suite 330
Littleton, CO 80127

Sheet Revisions

Date:	Comments	Init.

Colorado Department of Transportation
DOT Department of Transportation
2000 South Holly Street
Denver, CO 80222
Phone: 303-972-9112 FAX: 303-972-9114
Region 6 RLB

As Constructed
No Revisions:
Revised:
Void:

I-25/SANTA FE INTERCHANGE
RAMP 1 FLYOVER
SUPERSTRUCTURE DETAILS

Designer:	G. Reese	Structure Numbers	F-16-XR
Detailer:	R. Dillon		
Sheet Subset:	Bridge	Subset Sheets:	Bxx of XX

Project No./Code
IM 0254-394
16311
Sheet Number 137

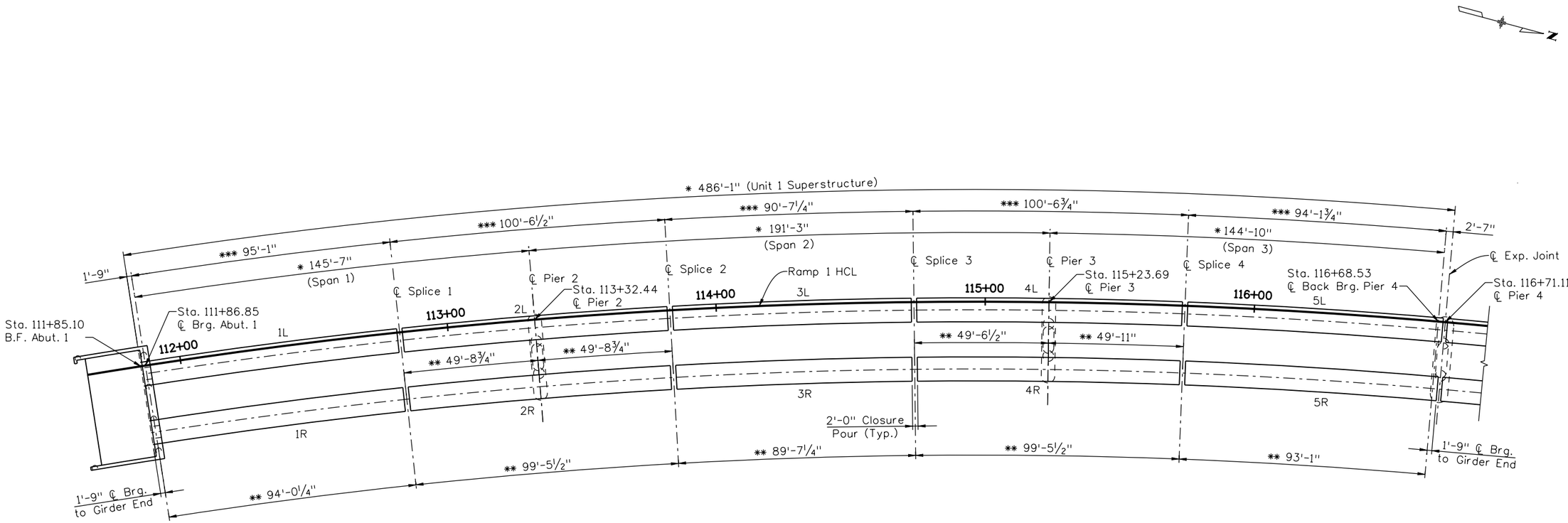

UNIT 1 SEGMENT LAYOUT PLAN

* Dimensions measured along Ramp 1 HCL.
** Dimensions measured along ℄ Right Girder.
*** Dimensions measured along ℄ Left Girder.

Design	INITIAL	DATE
Designed By		
Checked By		

Detail	INITIAL	DATE
Detailed By	KJS	08/10
Checked By		

Quantities	INITIAL	DATE
Quantities By		
Checked By		

Revision Dates (Preliminary Stage Only)

	Date:	Comments	Init.
Sheet Revisions			

Print Date: 9/27/2010
File Name: 16311BRDG_PH2_F-16-XR_SegLayout01.dgn
Horiz. Scale: 1:40 Vert. Scale: As Noted
Unit Information Unit Leader Initials

Summit Engineering Group, Incorporated
Consulting Structural Engineers
10822 Teller Drive Suite 330
Littleton, CO 80127

Colorado Department of Transportation
DOT Department of Transportation
2000 South Holly Street
Denver, CO 80222
Phone: 303-972-9112 FAX: 303-972-9114
Region 6 RLB

As Constructed
No Revisions:
Revised:
Void:

I-25/SANTA FE INTERCHANGE
RAMP 1 FLYOVER
UNIT 1 SEGMENT LAYOUT

Designer: G. Reese
Detailer: K. Soellner
Sheet Subset: Bridge
Structure Numbers: F-16-XR
Subset Sheets: B of XX

Project No./Code
IM 0254-394
16311
Sheet Number 138

soellner 1:47:58 PM K:\08276\16311\Phase 2\Bridge\Drawings\16311BRDG_PH2_F-16-XR_SegLayout01.dgn
9/27/2010 CDOT-PDFDraftQuality_XM.pltcfg *

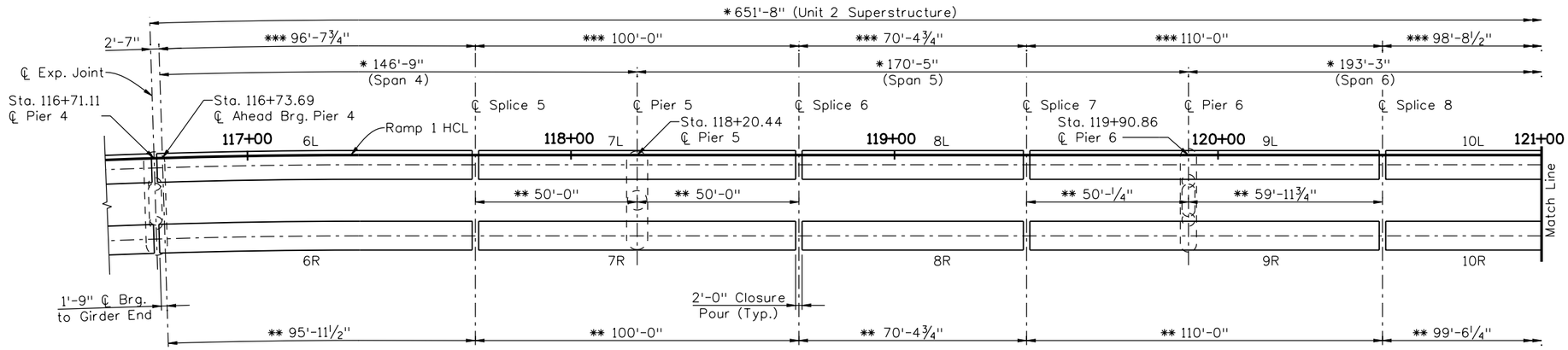

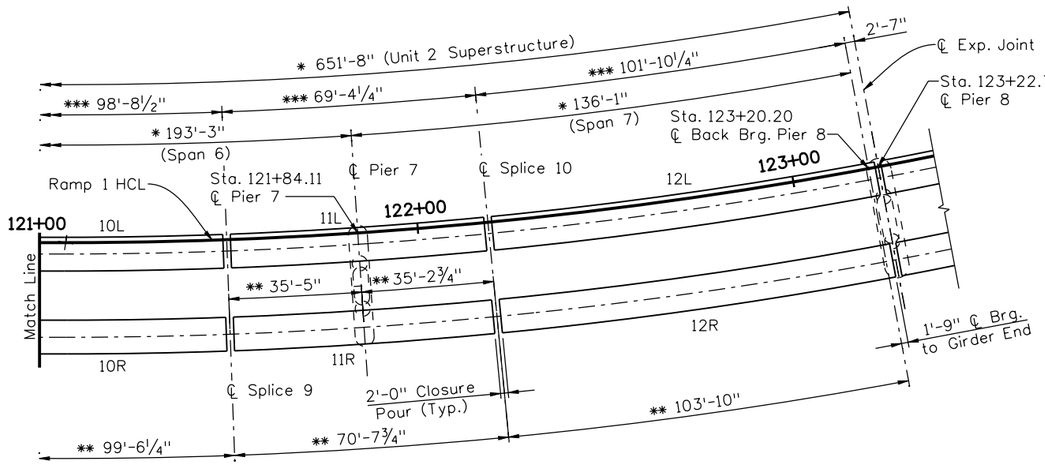

UNIT 2 SEGMENT LAYOUT PLAN

* Dimensions measured along Ramp 1 HCL.
** Dimensions measured along ℄ Right Girder.
*** Dimensions measured along ℄ Left Girder.

Revision Dates (Preliminary Stage Only)

Design	INITIAL	DATE
Designed By		
Checked By		

Detail	INITIAL	DATE
Detailed By	KJS	08/10
Checked By		

Quantities	INITIAL	DATE
Quantities By		
Checked By		

soellner 1:48:01 PM K:\08276\16311\Phase 2\Bridge\Drawings\16311BRDG_PH2_F-16-XR_SegLayout02.dgn
9/27/2010 CDOT-PDFDraftQuality_XM.pltcfg *

Print Date: 9/27/2010
File Name: 16311BRDG_PH2_F-16-XR_SegLayout02.dgn
Horiz. Scale: 1:40 Vert. Scale: As Noted
Unit Information Unit Leader Initials

Summit Engineering Group, Incorporated
Consulting Structural Engineers
10822 Teller Drive Suite 330
Littleton, CO 80127

Sheet Revisions

Date:	Comments	Init.

Colorado Department of Transportation
DOT Department of Transportation
2000 South Holly Street
Denver, CO 80222
Phone: 303-972-9112 FAX: 303-972-9114
Region 6 RLB

As Constructed
No Revisions:
Revised:
Void:

I-25/SANTA FE INTERCHANGE
RAMP 1 FLYOVER
UNIT 2 SEGMENT LAYOUT

Designer: G. Reese
Detailer: K. Soellner
Sheet Subset: Bridge
Structure Numbers: F-16-XR
Subset Sheets: B of XX

Project No./Code
IM 0254-394
16311
Sheet Number 139

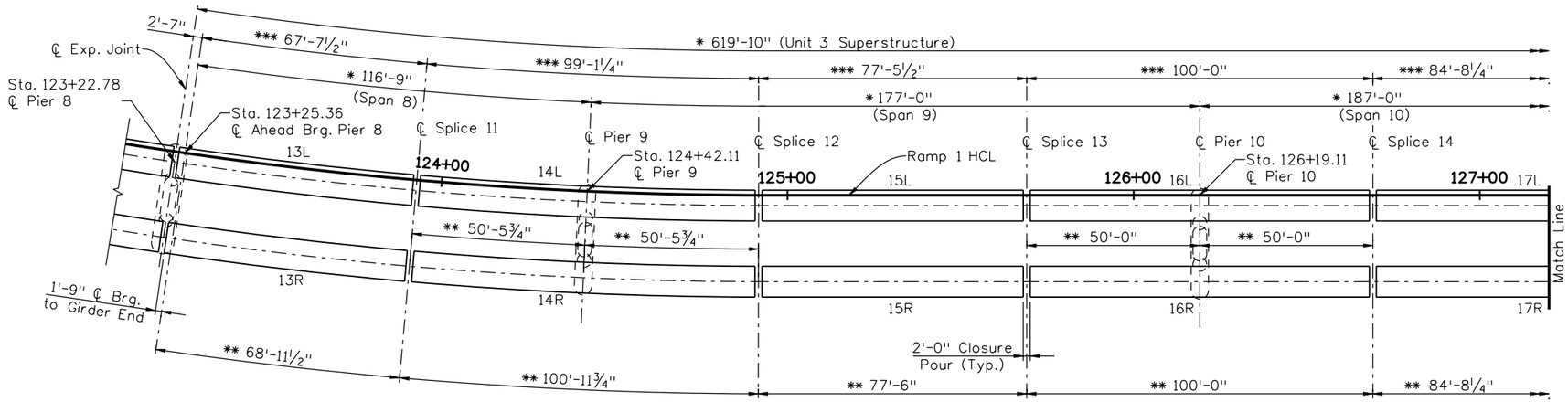

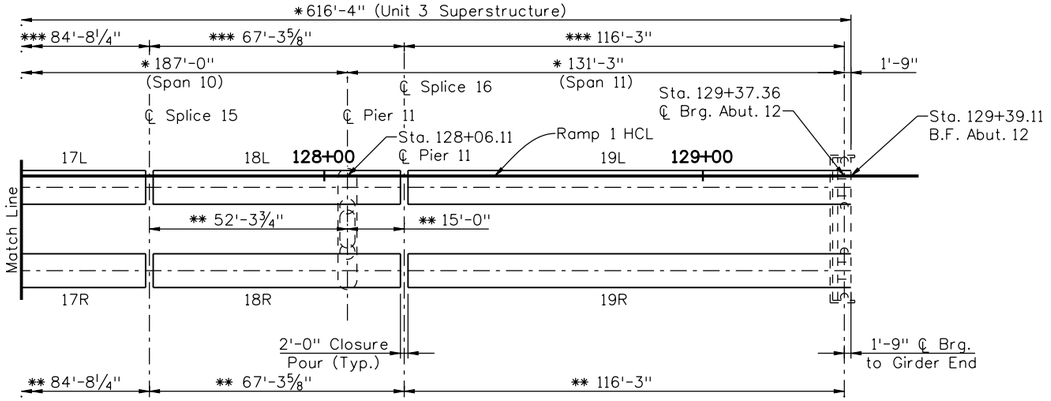

UNIT 3 SEGMENT LAYOUT PLAN

* Dimensions measured along Ramp 1 HCL.
** Dimensions measured along ℄ Right Girder.
*** Dimensions measured along ℄ Left Girder.

Revision Dates (Preliminary Stage Only)

Design	INITIAL	DATE
Designed By		
Checked By		

Detail	INITIAL	DATE
Detailed By	KJS	08/10
Checked By		

Quantities	INITIAL	DATE
Quantities By		
Checked By		

soellner 1:48:04 PM K:\08276\16311\Phase 2\Bridge\Drawings\16311BRDG_PH2_F-16-XR_SegLayout03.dgn
9/27/2010 CDOT-PDFDraftQuality_XM.pltcfg *

Print Date: 9/27/2010
File Name: 16311BRDG_PH2_F-16-XR_SegLayout03.dgn
Horiz. Scale: 1:40 Vert. Scale: As Noted
Unit Information Unit Leader Initials

Summit Engineering Group, Incorporated
Consulting Structural Engineers
10822 Teller Drive Suite 330
Littleton, CO 80127

Sheet Revisions		
Date:	Comments	Init.

Colorado Department of Transportation
DOT Department of Transportation
2000 South Holly Street
Denver, CO 80222
Phone: 303-972-9112 FAX: 303-972-9114
Region 6 RLB

As Constructed
No Revisions:
Revised:
Void:

I-25/SANTA FE INTERCHANGE
RAMP 1 FLYOVER
UNIT 3 SEGMENT LAYOUT

Designer: G. Reese
Detailer: K. Soellner
Sheet Subset: Bridge
Structure Numbers: F-16-XR
Subset Sheets: B of XX

Project No./Code
IM 0254-394
16311
Sheet Number 140

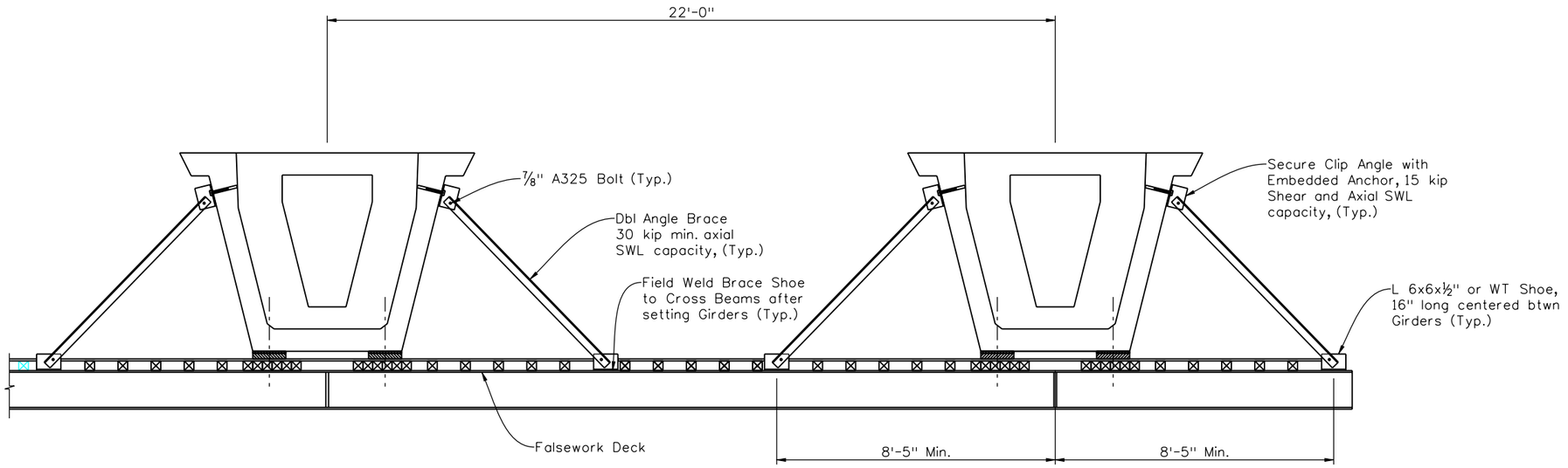

ERECTION BRACING AT ENDS OF PRECAST GIRDERS

NOTES:

1. This drawing is intended to represent suggested methods for bracing the precast girders during erection to resist rolling and provide and limit torsional stresses.
2. Girders will be supported and torsionally braced on falsework at each end at each splice during erection. RE: Falsework design drawings by others.
3. All girders will be braced at each end prior to releasing any significant load from erection equipment to prevent rolling.
4. Erection bracing shall be designed for a minimum service axial load of 30 kips. Braces and all associated connections shall be designed by Falsework Engineer.
5. Supporting falsework shall be designed to provide adequate stiffness under brace loads to prevent significant deflections when releasing girders.

Revision Dates (Preliminary Stage Only)

Design			Detail			Quantities		
	INITIAL	DATE		INITIAL	DATE		INITIAL	DATE
Designed By	GAR	08/10	Detailed By	RAD	08/10	Quantities By		
Checked By			Checked By	GAR	10/10	Checked By		

soellner 1:48:07 PM K:\08276\16311\Phase 2\Bridge\Drawings\16311BRDG_PH2_F-16-XR_GirderErect.dgn
9/27/2010 CDOT-PDFDraftQuality_XM.pltcfg *

Print Date: 9/27/2010
File Name: 16311BRDG_PH2_F-16-XR_GirderErect.dgn
Horiz. Scale: 1:1 Vert. Scale: As Noted
Unit Information Unit Leader Initials

Summit Engineering Group, Incorporated Consulting Structural Engineers
10822 Teller Drive Suite 330
Littleton, CO 80127

Sheet Revisions		
Date:	Comments	Init.

Colorado Department of Transportation
DEPARTMENT OF TRANSPORTATION
2000 South Holly Street
Denver, CO 80222
Phone: 303-972-9112 FAX: 303-972-9114
Region 6 RLB

As Constructed
No Revisions:
Revised:
Void:

I-25/SANTA FE INTERCHANGE
RAMP 1 FLYOVER
GIRDER ERECTION BRACING DETAILS

Designer: x
Detailer: K. Soellner
Sheet Subset: Bridge
Structure Numbers: F-16-XR
Subset Sheets: Bxx of XX

Project No./Code
IM 0254-394
16311
Sheet Number 141

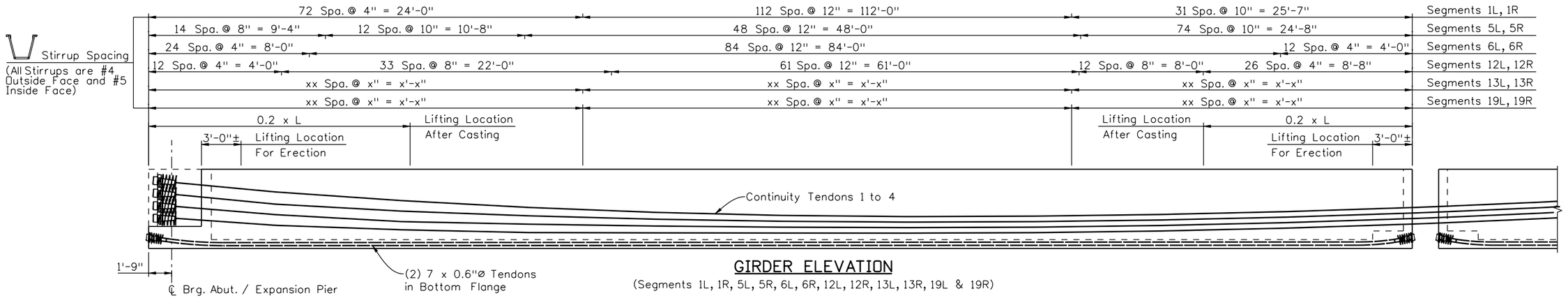

GIRDER ELEVATION

(Segments 1L, 1R, 5L, 5R, 6L, 6R, 12L, 12R, 13L, 13R, 19L & 19R)

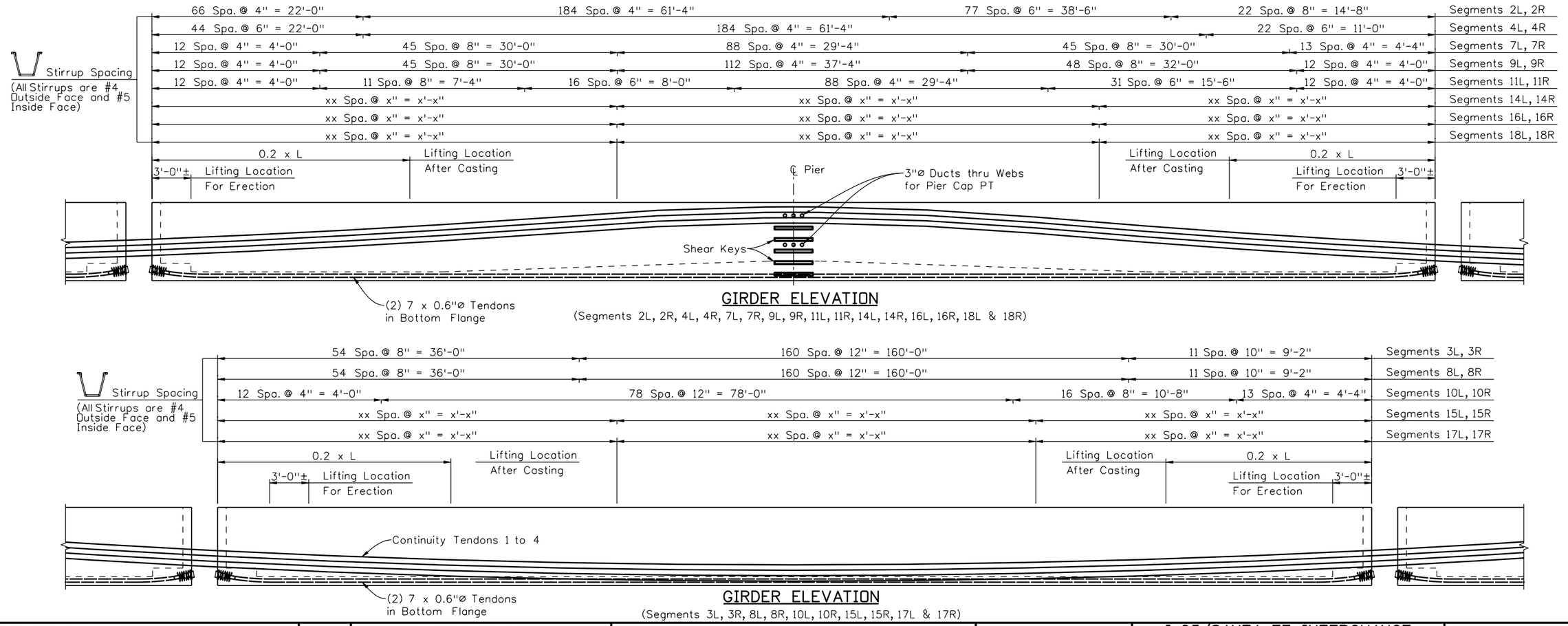

GIRDER ELEVATION

(Segments 2L, 2R, 4L, 4R, 7L, 7R, 9L, 9R, 11L, 11R, 14L, 14R, 16L, 16R, 18L & 18R)

GIRDER ELEVATION

(Segments 3L, 3R, 8L, 8R, 10L, 10R, 15L, 15R, 17L & 17R)

Revision Dates (Preliminary Stage Only)

Quantities	INITIAL	DATE
	Quantities By	Checked By

Detail	INITIAL	DATE
	RAD	08/10
	Detailed By	Checked By

Design	INITIAL	DATE
	GAR	08/10
Designed By		
Checked By		

soellner 1:48:11 PM K:\08276\16311\Phase 2\Bridge\Drawings\16311BRDG_PH2_F-16-XR_GirderDet01.dgn
9/27/2010 CDOT-PDFDraftQuality_XM.pltcfg *

Print Date: 9/27/2010
File Name: 16311BRDG_PH2_F-16-XR_GirderDet01.dgn
Horiz. Scale: 1:1 Vert. Scale: As Noted
Unit Information Unit Leader Initials

Summit Engineering Group, Incorporated
CONSULTING STRUCTURAL ENGINEERS
10822 Toller Drive Suite 330
Littleton, CO 80127

Sheet Revisions

Date:	Comments	Init.

Colorado Department of Transportation
DEPARTMENT OF TRANSPORTATION
2000 South Holly Street
Denver, CO 80222
Phone: 303-972-9112 FAX: 303-972-9114
Region 6 RLB

As Constructed
No Revisions:
Revised:
Void:

I-25/SANTA FE INTERCHANGE
RAMP 1 FLYOVER
GIRDER DETAILS (1 OF 4)

Designer: x
Detailer: K. Soellner
Sheet Subset: Bridge
Structure Numbers: F-16-XR
Subset Sheets: Bxx of XX

Project No./Code
IM 0254-394
16311
Sheet Number 142

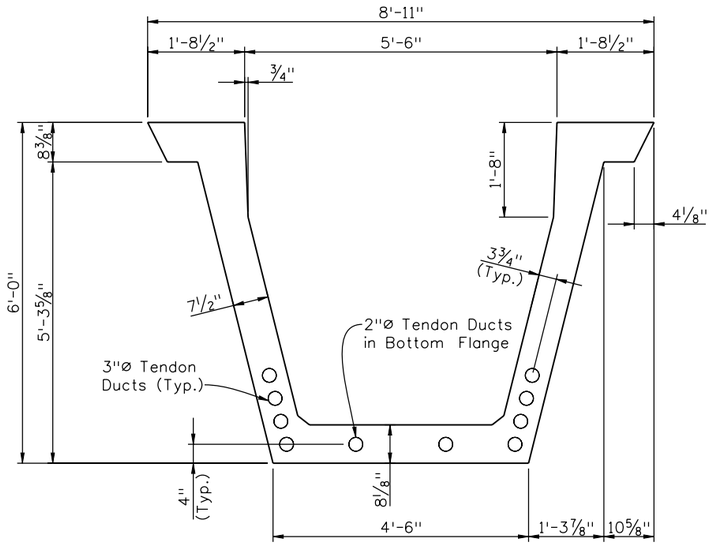

TYPICAL GIRDER DIMENSIONS

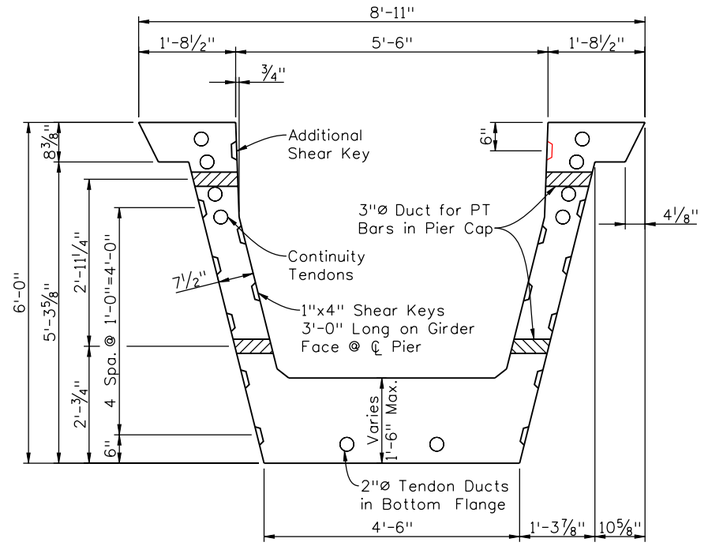

TYPICAL PIER GIRDER DIMENSIONS

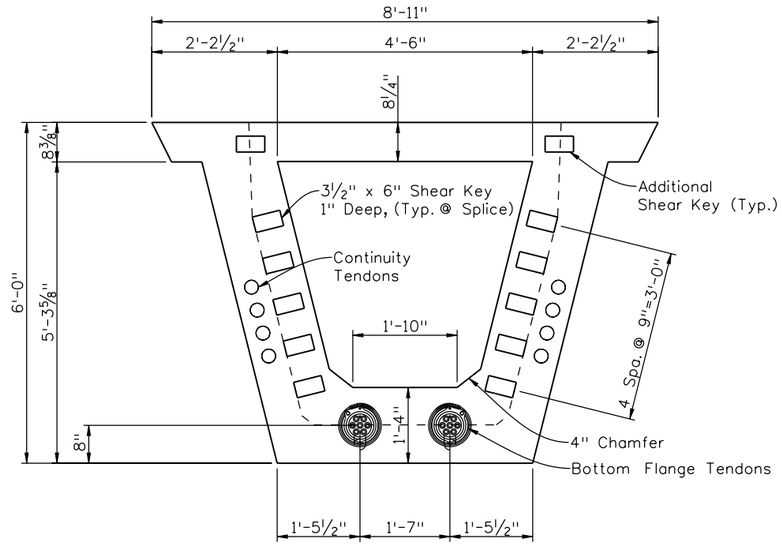

GIRDER END DIMENSIONS

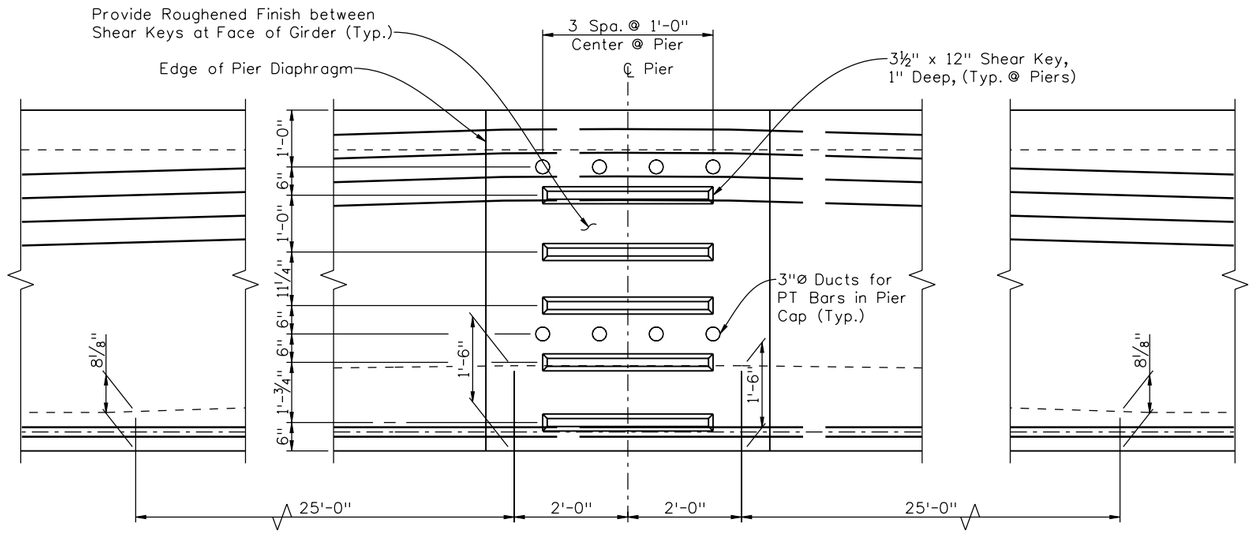

ELEVATION @ ℄ PIER

Revision Dates (Preliminary Stage Only)

Design			Detail			Quantities		
	INITIAL	DATE		INITIAL	DATE		INITIAL	DATE
Designed By	GAR	08/10	Detailed By	RAD	08/10	Quantities By		
Checked By			Checked By	GAR	10/10	Checked By		

soellner 1:48:15 PM K:\08276\16311\Phase 2\Bridge\Drawings\16311BRDG_PH2_F-16-XR_GirderDet02.dgn
9/27/2010 CDOT-PDFDraftQuality_XM.pltcfg *

Print Date: 9/27/2010
File Name: 16311BRDG_PH2_F-16-XR_GirderDet02.dgn
Horiz. Scale: 1:1 Vert. Scale: As Noted
Unit Information Unit Leader Initials

Summit Engineering Group, Incorporated
CONSULTING STRUCTURAL ENGINEERS
10822 Toller Drive Suite 330
Littleton, CO 80127

Sheet Revisions		
Date:	Comments	Init.

Colorado Department of Transportation
DEPARTMENT OF TRANSPORTATION
2000 South Holly Street
Denver, CO 80222
Phone: 303-972-9112 FAX: 303-972-9114
Region 6 RLB

As Constructed
No Revisions:
Revised:
Void:

I-25/SANTA FE INTERCHANGE
RAMP 1 FLYOVER
GIRDER DETAILS (2 OF 4)

Designer: x
Detailer: K. Soellner
Sheet Subset: Bridge
Structure Numbers: F-16-XR
Subset Sheets: Bxx of XX

Project No./Code
IM 0254-394
16311
Sheet Number 143

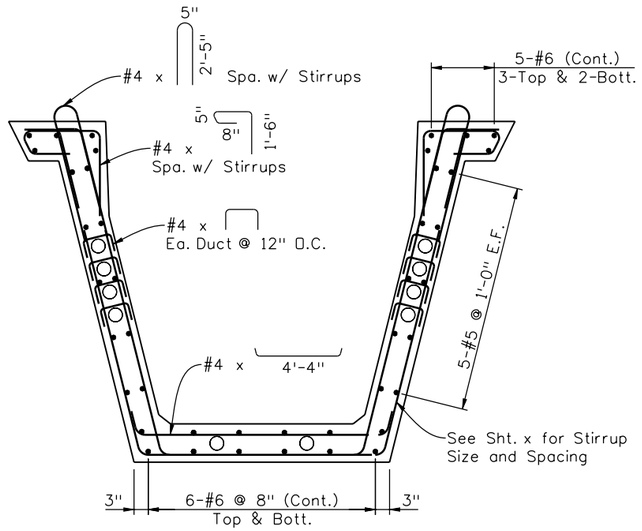

TYPICAL GIRDER REINFORCEMENT

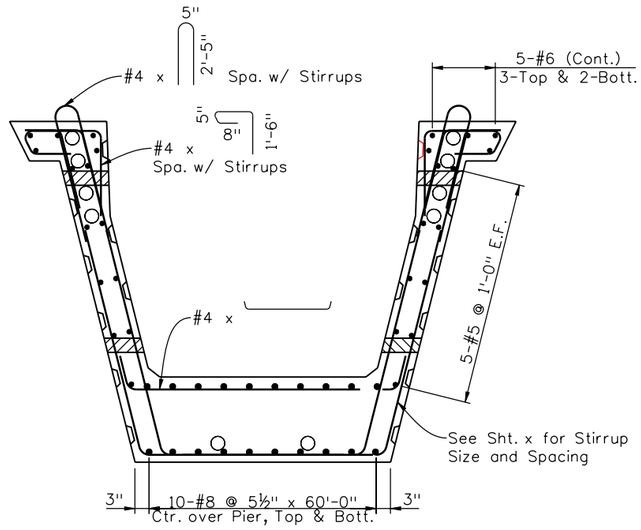

TYPICAL PIER GIRDER REINFORCEMENT

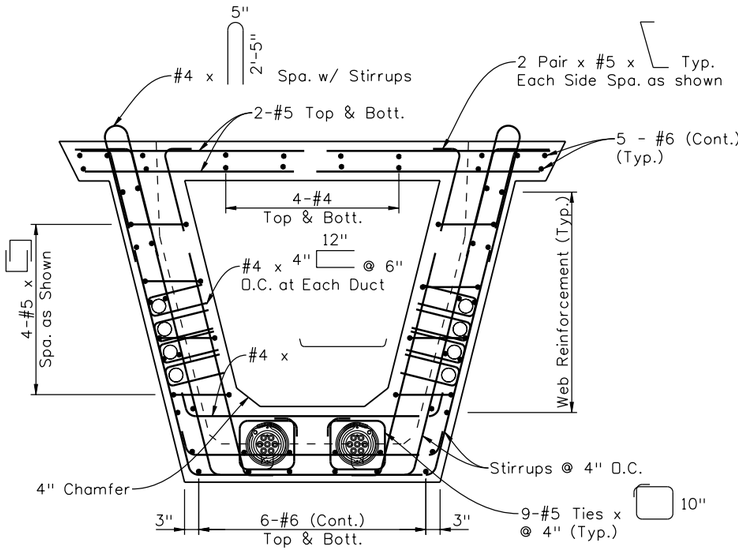

SECTION (A)

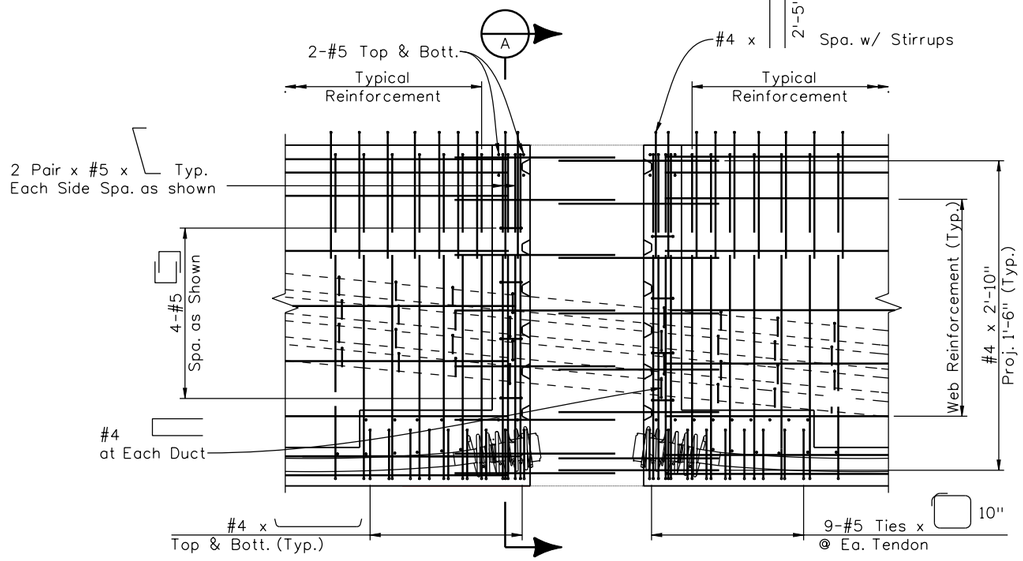

END OF PRECAST GIRDERS @ TYPICAL SPLICE

Revision Dates (Preliminary Stage Only)

Design				Detail				Quantities			
	INITIAL	DATE		INITIAL	DATE		INITIAL	DATE
Designed By	GAR	08/10	Detailed By	RAD	08/10	Quantities By		
Checked By			Checked By	GAR	10/10	Checked By		

soellner 1:48:19 PM K:\08276\16311\Phase 2\Bridge\Drawings\16311BRDG_PH2_F-16-XR_GirderDet03.dgn
9/27/2010 CDOT-PDFDraftQuality_XM.pltcfg *

Print Date: 9/27/2010
File Name: 16311BRDG_PH2_F-16-XR_GirderDet03.dgn
Horiz. Scale: 1:1 Vert. Scale: As Noted
Unit Information Unit Leader Initials

Summit Engineering Group, Incorporated
Consulting Structural Engineers
10822 Teller Drive Suite 330
Littleton, CO 80127

Sheet Revisions

Date:	Comments	Init.

Colorado Department of Transportation
DOT Department of Transportation
2000 South Holly Street
Denver, CO 80222
Phone: 303-972-9112 FAX: 303-972-9114
Region 6 RLB

As Constructed
No Revisions:
Revised:
Void:

I-25/SANTA FE INTERCHANGE
RAMP 1 FLYOVER
GIRDER DETAILS (3 OF 4)

Designer:	x	Structure Numbers	F-16-XR
Detailer:	K. Soellner		
Sheet Subset:	Bridge	Subset Sheets:	Bxx of XX

Project No./Code
IM 0254-394
16311
Sheet Number 144

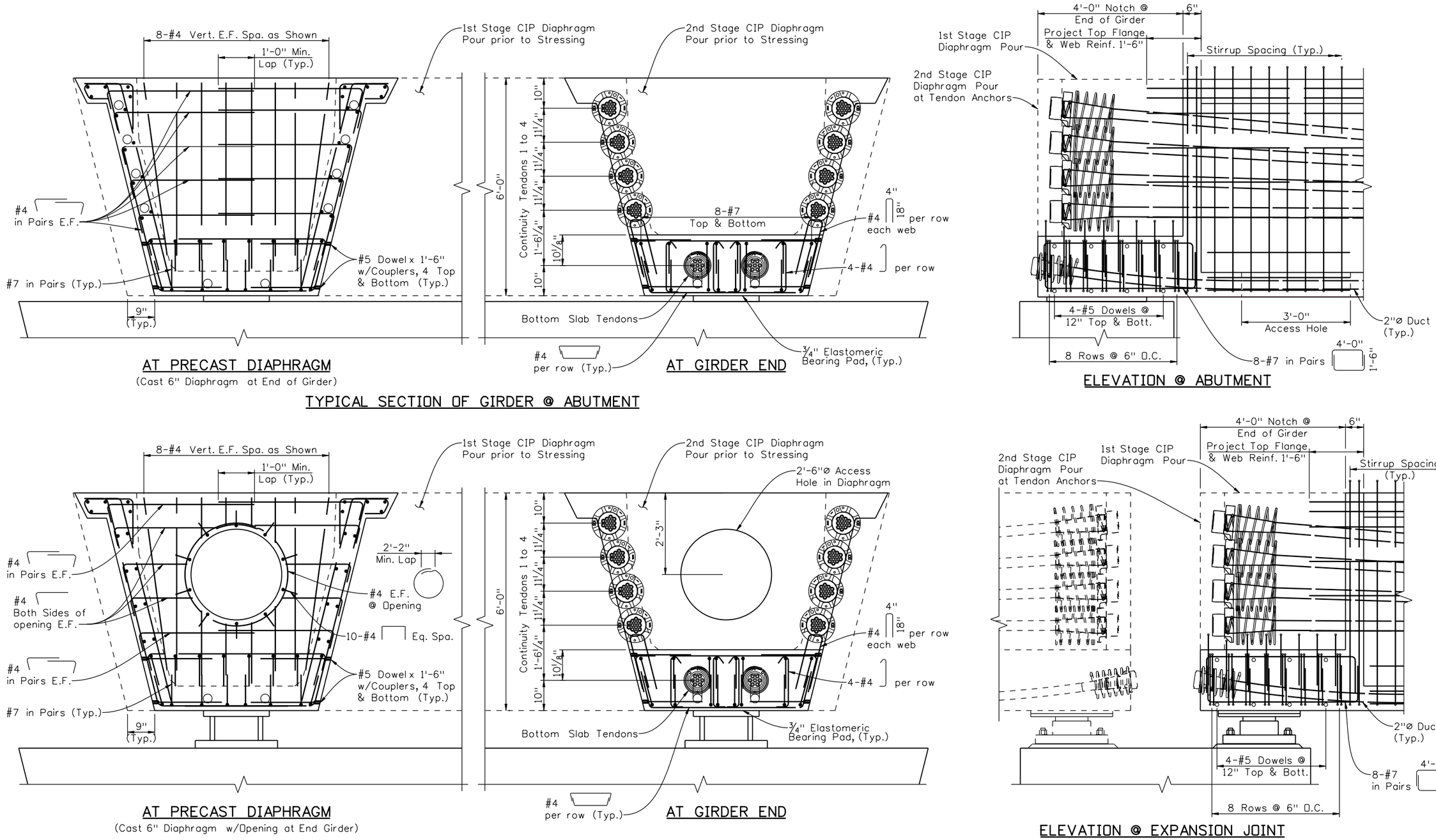

Revision Dates									
Design	INITIAL	DATE	Detail	INITIAL	DATE	Quantities	INITIAL	DATE
Designed By	GAR	08/10	Detailed By	RAD	08/10	Quantities By		
Checked By			Checked By	GAR	10/10	Checked By		

soellner 1:48:24 PM K:\08276\16311\Phase 2\Bridge\Drawings\16311BRDG_PH2_F-16-XR_GirderDet04.dgn
9/27/2010 CDOT-PDFDraftQuality_XM.pltcfg *

Print Date: 9/27/2010
File Name: 16311BRDG_PH2_F-16-XR_GirderDet04.dgn
Horiz. Scale: 1:1 Vert. Scale: As Noted
Unit Information Unit Leader Initials

Summit Engineering Group, Incorporated Consulting Structural Engineers
10822 Toller Drive Suite 330
Littleton, CO 80127

Sheet Revisions		
Date:	Comments	Init.

Colorado Department of Transportation
DOT Department of Transportation
2000 South Holly Street
Denver, CO 80222
Phone: 303-972-9112 FAX: 303-972-9114
Region 6 RLB

As Constructed
No Revisions:
Revised:
Void:

I-25/SANTA FE INTERCHANGE
RAMP 1 FLYOVER
GIRDER DETAILS (4 OF 4)

Designer:	x	Structure Numbers	F-16-XR
Detailer:	K. Soellner		
Sheet Subset:	Bridge	Subset Sheets:	Bxx of XX

Project No./Code
IM 0254-394
16311
Sheet Number 145

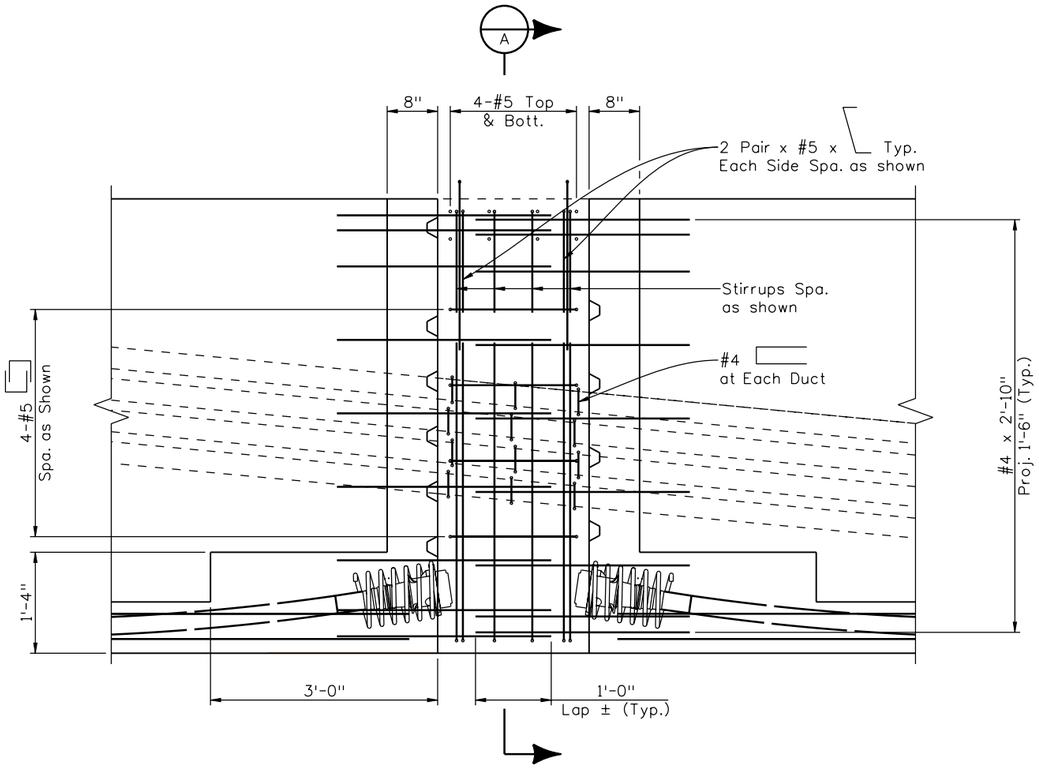

END OF PRECAST GIRDERS @ TYPICAL SPLICE

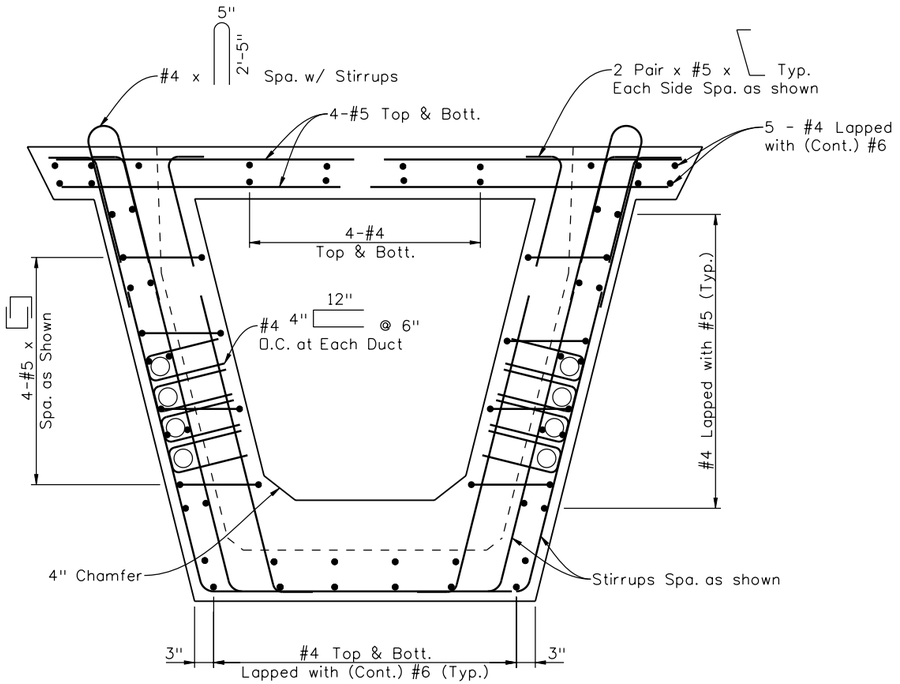

SECTION A

Design			Detail			Quantities		
	INITIAL	DATE		INITIAL	DATE		INITIAL	DATE
Designed By	GAR	08/10	Detailed By	RAD	08/10	Quantities By		
Checked By			Checked By	GAR	10/10	Checked By		

Revision Dates (Preliminary Stage Only)

soellner 1:48:29 PM K:\08276\16311\Phase 2\Bridge\Drawings\16311BRDG_PH2_F-16-XR_SpliceDet01.dgn
9/27/2010 CDOT-PDFDraftQuality_XM.pltcfg *

Print Date: 9/27/2010
File Name: 16311BRDG_PH2_F-16-XR_SpliceDet01.dgn
Horiz. Scale: 1:1 Vert. Scale: As Noted
Unit Information Unit Leader Initials

Summit Engineering Group, Incorporated
Consulting Structural Engineers
10822 Toller Drive Suite 330
Littleton, CO 80127

Sheet Revisions		
Date:	Comments	Init.

Colorado Department of Transportation
DOT Department of Transportation
2000 South Holly Street
Denver, CO 80222
Phone: 303-972-9112 FAX: 303-972-9114
Region 6 RLB

As Constructed
No Revisions:
Revised:
Void:

I-25/SANTA FE INTERCHANGE
RAMP 1 FLYOVER
TYPICAL SPLICE DETAILS

Designer:	x	Structure Numbers	F-16-XR
Detailer:	K. Soellner		
Sheet Subset:	Bridge	Subset Sheets:	Bxx of XX

Project No./Code
IM 0254-394
16311
Sheet Number 146

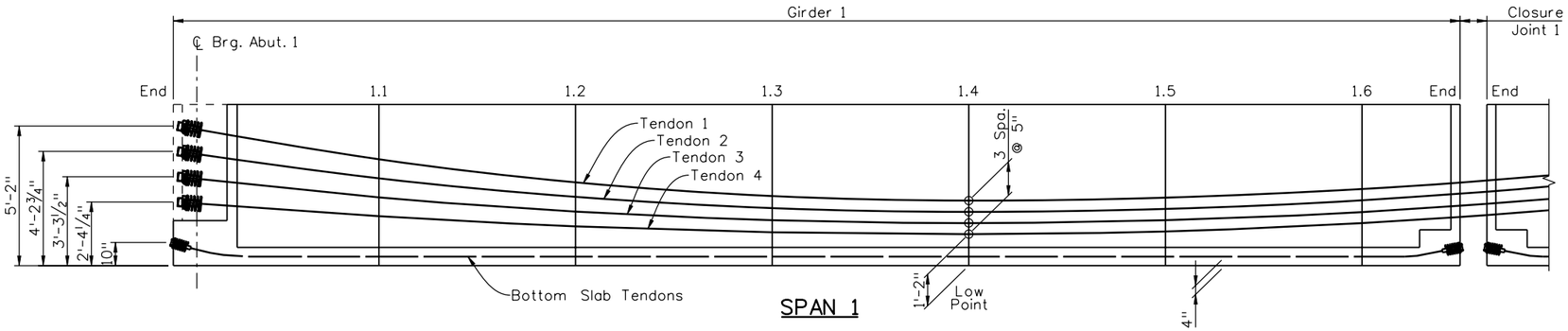

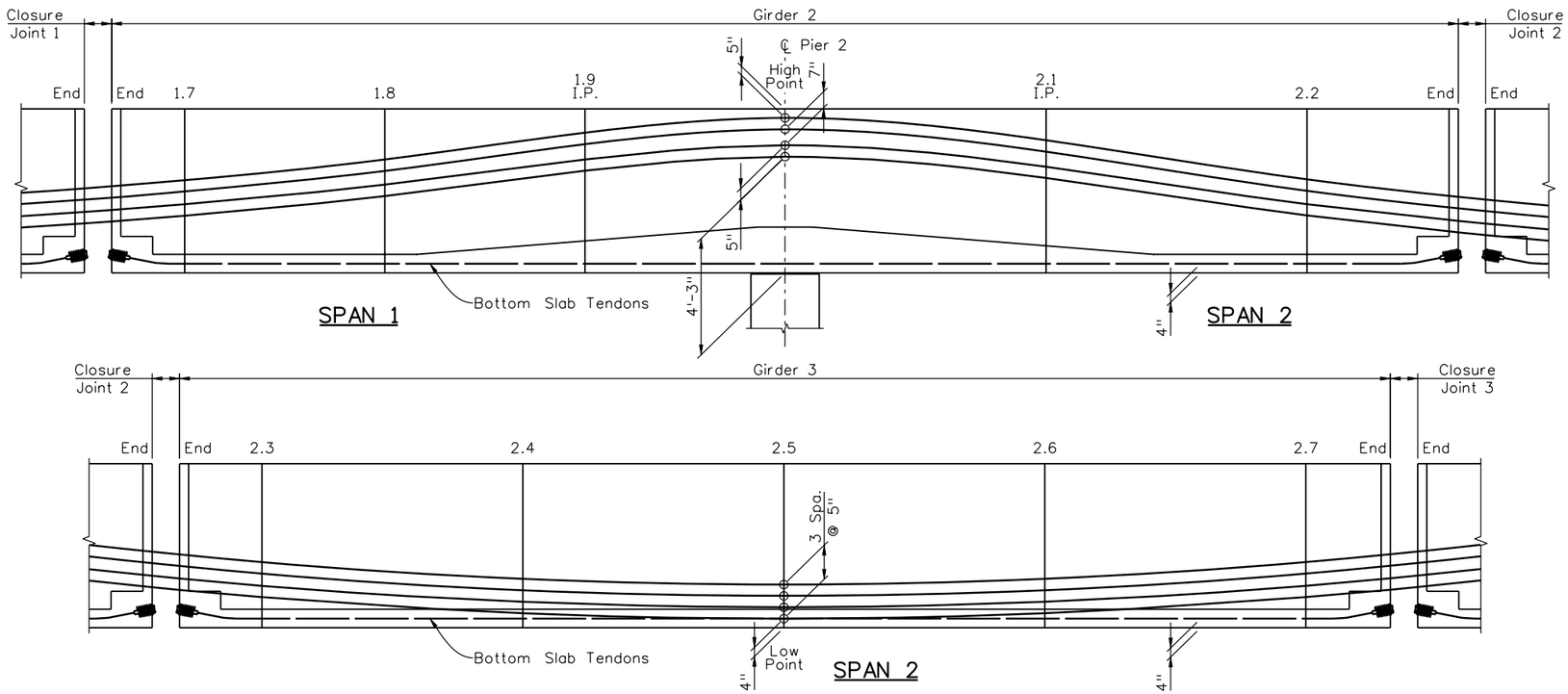

TENDON INFORMATION

GIRDER 1									GIRDER 2								GIRDER 3						
TENDON	END	1.1L	1.2L	1.3L	1.4L	1.5L	1.6L	END	END	1.7L	1.8L	1.9L	PIER 2	2.1L	2.2L	END	END	2.3L	2.4L	2.5L	2.6L	2.7L	END
1	62.00	47.56	37.25	31.06	29.00	30.30	34.20	37.11	38.03	40.70	49.80	61.50	68.00	58.20	41.05	33.35	32.14	28.80	21.45	19.00	21.45	28.80	32.23
2	50.75	39.05	30.69	25.67	24.00	25.30	29.20	32.11	33.03	35.70	44.80	56.50	63.00	53.20	36.05	28.35	27.14	23.80	16.45	14.00	16.45	23.80	27.23
3	39.50	30.53	24.13	20.28	19.00	20.23	23.93	26.70	27.56	30.10	38.73	49.83	56.00	46.60	30.15	22.77	21.60	18.40	11.35	9.00	11.35	18.40	21.69
4	28.25	22.02	17.56	14.89	14.00	15.23	18.93	21.70	22.56	25.10	33.73	44.83	51.00	41.60	25.15	17.77	16.60	13.40	6.36	4.00	6.35	13.40	16.69

* Dimensions, in inches, measured from bottom of girder to centerline of duct.
** Tenth points measured along centerline of girder on outside of curve.

Revision Dates (Preliminary Stage Only)

Design			Detail			Quantities		
	INITIAL	DATE		INITIAL	DATE		INITIAL	DATE
Designed By	GAR	08/10	Detailed By	RAD	08/10	Quantities By		
Checked By			Checked By	GAR	10/10	Checked By		

soellner 1:48:32 PM K:\08276\16311\Phase 2\Bridge\Drawings\16311BRDG_PH2_F-16-XR_PTLay01a.dgn
9/27/2010 CDOT-PDFDraftQuality_XM.pltcfg *

Print Date: 9/27/2010
File Name: 16311BRDG_PH2_F-16-XR_PTLay01a.dgn
Horiz. Scale: 1:1 Vert. Scale: As Noted
Unit Information Unit Leader Initials

Summit Engineering Group, Incorporated
CONSULTING STRUCTURAL ENGINEERS
10822 Toller Drive Suite 330
Littleton, CO 80127

Sheet Revisions

Date:	Comments	Init.

Colorado Department of Transportation
DEPARTMENT OF TRANSPORTATION
2000 South Holly Street
Denver, CO 80222
Phone: 303-972-9112 FAX: 303-972-9114
Region 6 RLB

As Constructed
No Revisions:
Revised:
Void:

I-25/SANTA FE INTERCHANGE
RAMP 1 FLYOVER
UNIT 1 PT LAYOUT (1 OF 2)

Designer: x
Detailer: K. Soellner
Sheet Subset: Bridge
Structure Numbers: F-16-XR
Subset Sheets: Bxx of XX

Project No./Code
IM 0254-394
16311
Sheet Number 147

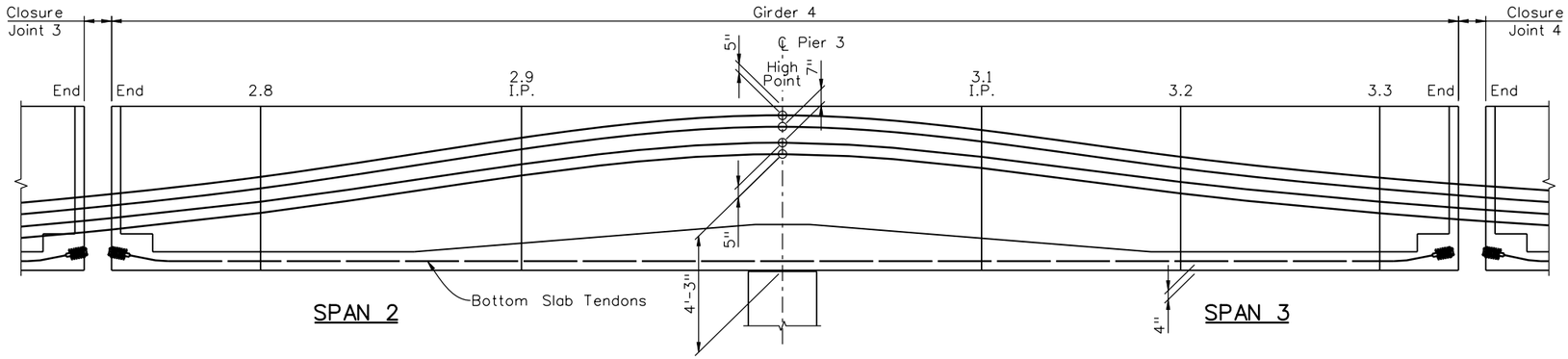

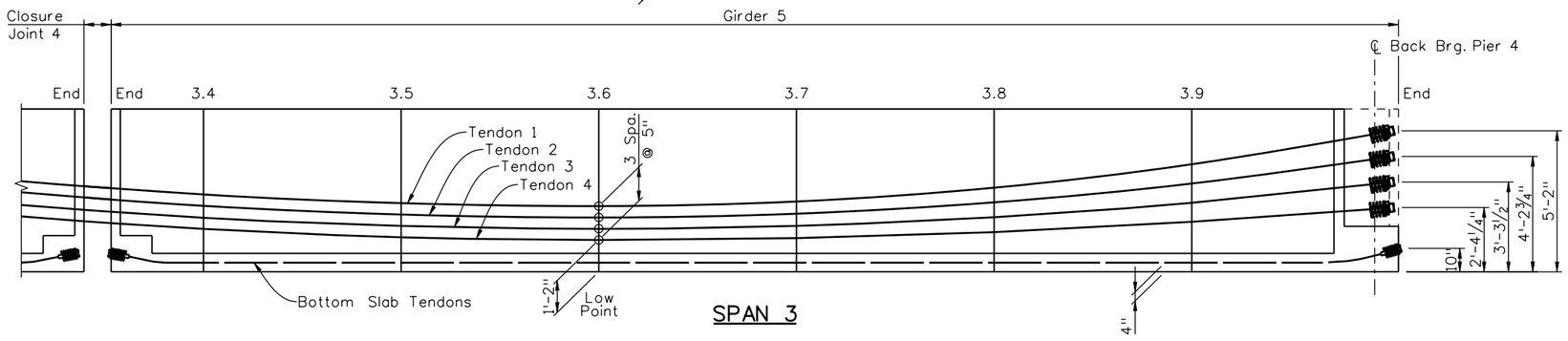

TENDON INFORMATION

	GIRDER 4								GIRDER 5							
TENDON	END	2.8L	2.9L	PIER 3	3.1L	3.2L	3.3L	END	END	3.4L	3.5L	3.6L	3.7L	3.8L	3.9L	END
1	33.45	41.05	58.20	68.00	61.50	49.80	40.70	37.82	36.92	34.20	30.30	29.00	31.06	37.25	47.56	62.00
2	28.45	36.05	53.20	63.00	56.50	44.80	35.70	32.82	31.92	29.20	25.30	24.00	25.67	30.69	39.05	50.75
3	22.86	30.15	46.60	56.00	49.83	38.73	30.10	27.37	26.51	23.93	20.23	19.00	20.28	24.13	30.53	39.50
4	17.86	25.15	41.60	51.00	44.83	33.73	25.10	22.37	21.51	18.93	15.23	14.00	14.89	17.56	22.02	28.25

* Dimensions, in inches, measured from bottom of girder to centerline of duct.
** Tenth points measured along centerline of girder on outside of curve.

TENDON DATA

TENDON NUMBER	1	2	3	4
# OF 0.6" DIA. STRANDS	24	24	24	24

BOTTOM SLAB TENDON DATA

GIRDER NUMBER	1	2	3	4	5
# OF 0.6" DIA. STRANDS	14	14	14	14	14
TYPE OF TENDON	7x0.6"	7x0.6"	7x0.6"	7x0.6"	7x0.6"

DESIGN:

Design is based on K=0.0002 and Meu=0.25. P(jack) at the jacking ends includes friction, anchor set of 1/4" at the jacking ends, elastic shortening, and provisions for an additional long term loss in stress per AASHTO guidelines.

All tendons shown assume 0.6"ø low relaxation strands.

P(jack) = 44 kips per strand in bottom tendons at jacking ends
= 308 kips per path (duct) for 7 x 0.6"ø tendons at jacking ends
= 527 kips per path (duct) for 12 x 0.6"ø tendons at jacking ends
f's = 270 ksi
f'c = 8000 psi girder concrete at 28 days field compressive strength (class PS)
= 5800 psi cast-in-place girder concrete at 28 days field compressive strength (class S40 or approved alternate)
f'ci = 4500 psi in closure pours prior to stressing tendons 1 thru 4

STRESSING SEQUENCE - SPANS 1 TO 3:

1. Stress and grout bottom slab tendons in girders in the casting yard prior to shipping to the bridge site.
2. Erect girder segments at bridge site.
3. Cast diaphragms, closures and grout precast panels over girders.
4. Stress tendons 1 thru 4 from both ends at Abutment 1 and Pier 4. Stress tendons in both webs simultaneously, or stress in increments of 50% of the final force, alternating each side of the girder.

NOTES:

Reinforcement that interferes with the prestressing tendon alignment shall be adjusted as approved by the engineer.

All dimensions are to the centerline of the duct. Deviations from the duct arrangement shown will not be approved. Small changes in the force per duct and the path of each duct must be approved by the engineer. Alternative strand sizes are acceptable.

Use low-relaxation strands meeting the requirements of ASTM A416 Grade 270. The contractor shall submit elongation calculations based on friction, wobble and anchor set.

The contractor shall survey the bridge prior to casting to verify that the minimum thickness of all elements of the deck slab will be maintained or exceeded.

Revision Dates (Preliminary Stage Only)

Design	INITIAL	DATE
Designed By	GAR	08/10
Checked By		

Detail	INITIAL	DATE
Detailed By	RAD	08/10
Checked By	GAR	10/10

Quantities	INITIAL	DATE
Quantities By		
Checked By		

soellner 1:48:36 PM K:\08276\16311\Phase 2\Bridge\Drawings\16311BRDG_PH2_F-16-XR_PTLay01b.dgn
9/27/2010 CDOT-PDFDraftQuality_XM.pltcfg *

Print Date: 9/27/2010
File Name: 16311BRDG_PH2_F-16-XR_PTLay01b.dgn
Horiz. Scale: 1:1 Vert. Scale: As Noted
Unit Information Unit Leader Initials

Summit Engineering Group, Incorporated
CONSULTING STRUCTURAL ENGINEERS
10822 Teller Drive Suite 330
Littleton, CO 80127

Sheet Revisions

Date:	Comments	Init.

Colorado Department of Transportation
DEPARTMENT OF TRANSPORTATION
2000 South Holly Street
Denver, CO 80222
Phone: 303-972-9112 FAX: 303-972-9114
Region 6 RLB

As Constructed
No Revisions:
Revised:
Void:

I-25/SANTA FE INTERCHANGE
RAMP 1 FLYOVER
UNIT 1 PT LAYOUT (2 OF 2)

Designer:	x	Structure Numbers	F-16-XR
Detailer:	K. Soellner		
Sheet Subset:	Bridge	Subset Sheets:	Bxx of XX

Project No./Code
IM 0254-394
16311
Sheet Number 148

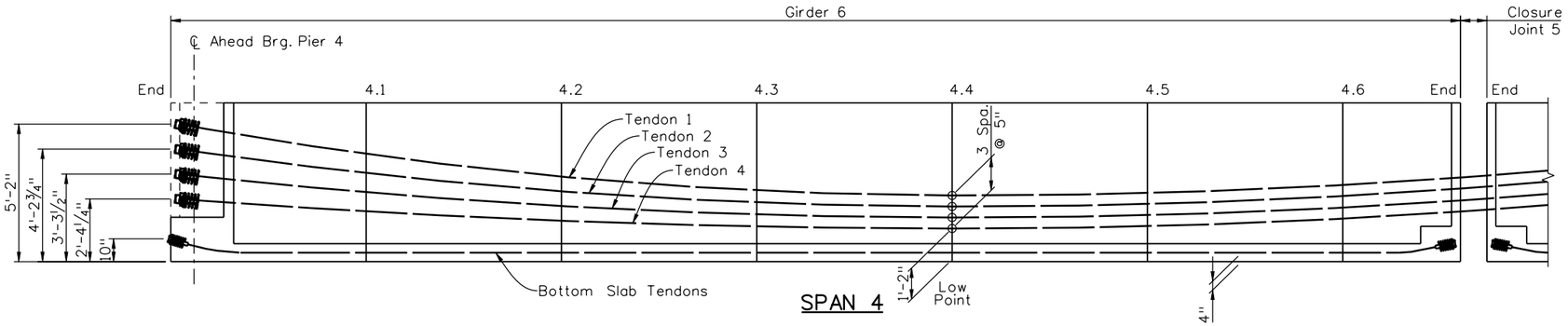

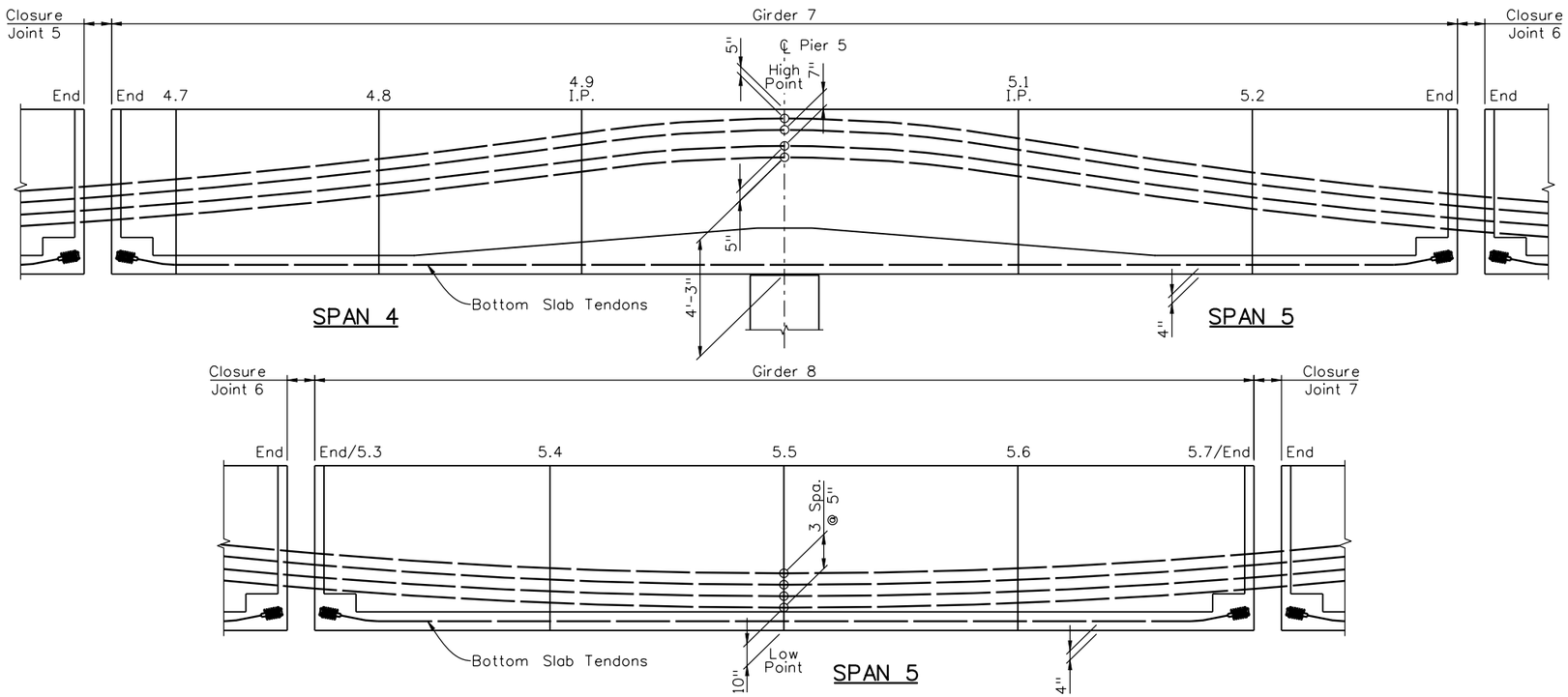

TENDON INFORMATION

	GIRDER 6								GIRDER 7								GIRDER 8				
TENDON	END	4.1L	4.2L	4.3L	4.4L	4.5L	4.6L	END	END	4.7L	4.8L	4.9L	PIER 5	5.1L	5.2L	END	END/5.3L	5.4L	5.5L	5.6L	5.7L/END
1	62.00	48.00	38.00	32.00	30.00	31.27	35.07	39.12	41.40	38.22	50.27	61.67	58.00	59.40	44.35	34.71	33.66	27.15	25.00	27.15	33.65
2	50.75	39.48	31.44	26.61	25.00	26.27	30.07	34.12	36.40	33.22	45.27	56.67	53.00	54.40	39.35	29.71	28.66	22.15	20.00	22.15	28.65
3	39.50	30.97	24.88	21.22	20.00	21.20	24.80	28.64	30.80	27.79	39.20	50.00	56.00	47.80	33.45	24.25	23.26	17.05	15.00	17.05	23.25
4	28.25	22.45	18.31	15.83	15.00	16.20	19.80	23.64	25.80	22.79	34.20	45.00	51.00	42.80	28.45	19.25	18.26	12.05	10.00	12.05	18.25

* Dimensions, in inches, measured from bottom of girder to centerline of duct.
** Tenth points measured along centerline of girder on outside of curve.

Revision Dates (Preliminary Stage Only)

Design	INITIAL	DATE
Designed By	GAR	08/10
Checked By		

Detail	INITIAL	DATE
Detailed By	RAD	08/10
Checked By	GAR	10/10

Quantities	INITIAL	DATE
Quantities By		
Checked By		

soellner 1:48:41 PM K:\08276\16311\Phase 2\Bridge\Drawings\16311BRDG_PH2_F-16-XR_PTLay02a.dgn
9/27/2010 CDOT-PDFDraftQuality_XM.pltcfg *

Print Date: 9/27/2010
File Name: 16311BRDG_PH2_F-16-XR_PTLay02a.dgn
Horiz. Scale: 1:1 Vert. Scale: As Noted
Unit Information Unit Leader Initials

Summit Engineering Group, Incorporated
CONSULTING STRUCTURAL ENGINEERS
10822 Teller Drive Suite 330
Littleton, CO 80127

Sheet Revisions		
Date:	Comments	Init.

Colorado Department of Transportation
DEPARTMENT OF TRANSPORTATION
2000 South Holly Street
Denver, CO 80222
Phone: 303-972-9112 FAX: 303-972-9114
Region 6 RLB

As Constructed
No Revisions:
Revised:
Void:

I-25/SANTA FE INTERCHANGE
RAMP 1 FLYOVER
UNIT 2 PT LAYOUT (1 OF 3)

Designer: x
Detailer: K. Soellner
Sheet Subset: Bridge
Structure Numbers: F-16-XR
Subset Sheets: Bxx of XX

Project No./Code
IM 0254-394
16311
Sheet Number 149

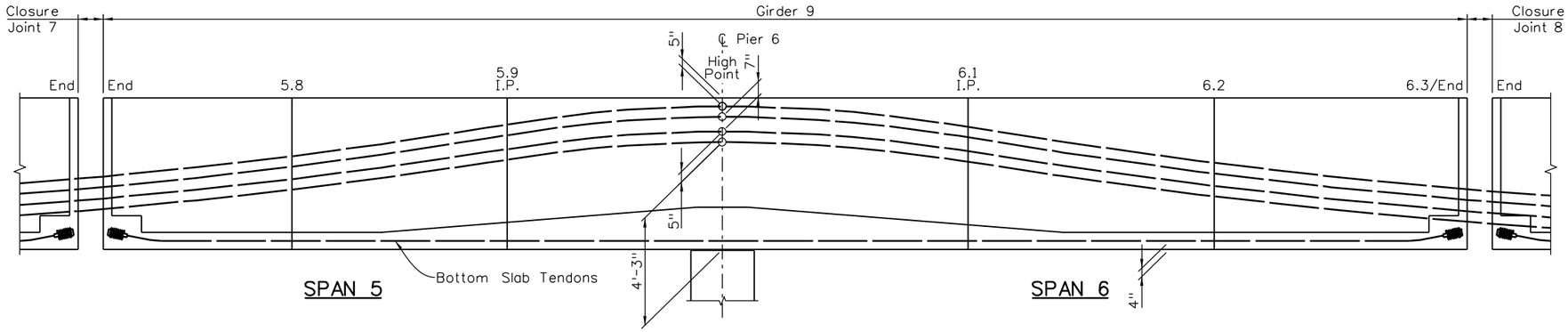

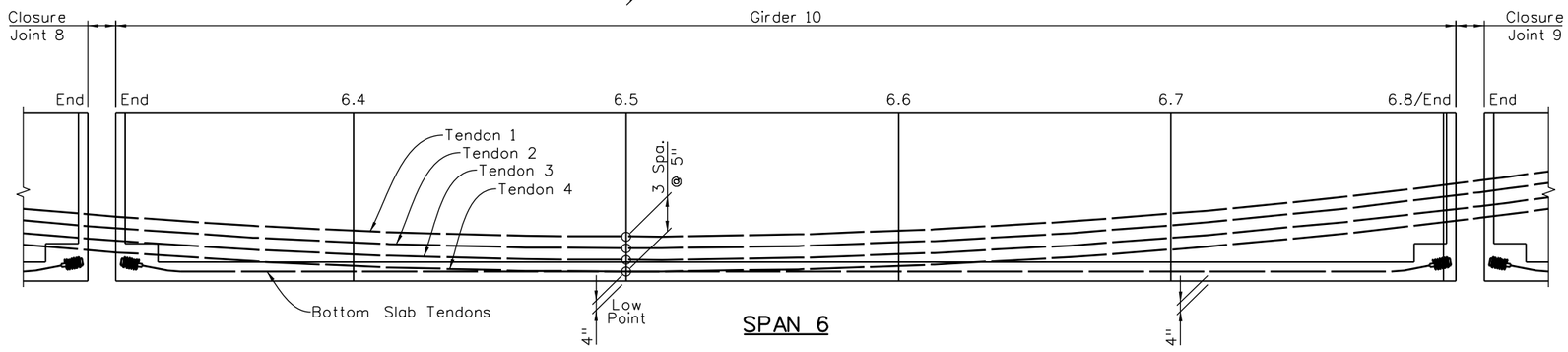

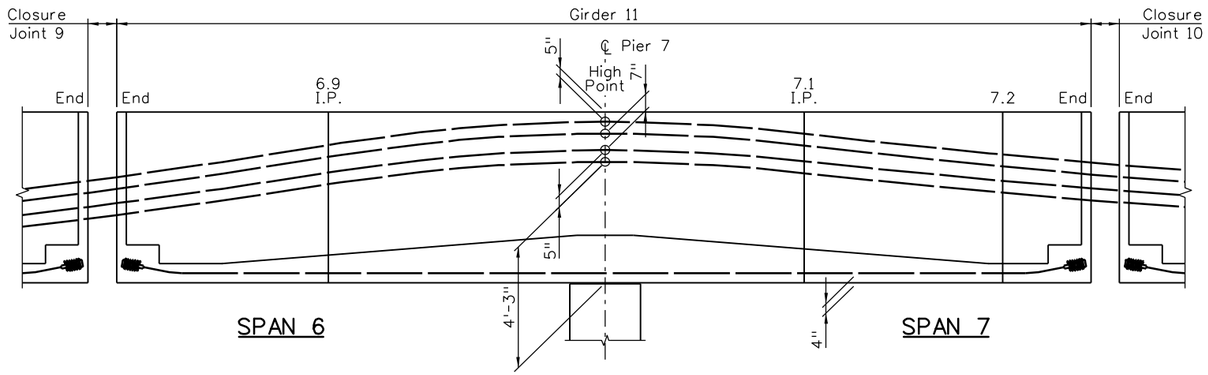

TENDON INFORMATION

GIRDER 9									GIRDER 10							GIRDER 11					
TENDON	END	5.8L	5.9L	PIER 6	6.1L	6.2L	6.3L	END	END	6.4L	6.5L	6.6L	6.7L	6.8L	END	END	6.9L	PIER 7	7.1L	7.2L	END
1	34.69	44.35	59.40	68.00	58.20	41.05	28.80	28.55	27.59	21.45	19.00	21.45	28.80	41.05	43.02	44.62	58.20	68.00	63.00	54.00	50.67
2	29.69	39.35	54.40	63.00	53.20	36.05	23.80	23.55	22.59	16.45	14.00	16.45	23.80	36.05	38.02	39.62	53.20	63.00	58.00	49.00	45.67
3	24.24	33.45	47.80	56.00	46.60	30.15	18.40	18.16	17.24	11.35	9.00	11.35	18.40	30.15	32.04	33.58	46.60	56.00	51.33	42.93	39.83
4	19.24	28.45	42.80	51.00	41.60	25.15	13.40	13.16	12.24	6.35	4.00	6.35	13.40	25.15	27.04	28.58	41.60	51.00	46.33	37.93	34.83

* Dimensions, in inches, measured from bottom of girder to centerline of duct.
** Tenth points measured along centerline of girder on outside of curve.

Revision Dates (Preliminary Stage Only)

Design			Detail			Quantities		
	INITIAL	DATE		INITIAL	DATE		INITIAL	DATE
Designed By	GAR	08/10	Detailed By	RAD	08/10	Quantities By		
Checked By			Checked By	GAR	10/10	Checked By		

Print Date: 9/27/2010
File Name: 16311BRDG_PH2_F-16-XR_PTLay02b.dgn
Horiz. Scale: 1:1 Vert. Scale: As Noted
Unit Information Unit Leader Initials

Summit Engineering Group, Incorporated
Consulting Structural Engineers
10822 Teller Drive Suite 330
Littleton, CO 80127

Sheet Revisions		
Date:	Comments	Init.

Colorado Department of Transportation
DEPARTMENT OF TRANSPORTATION
2000 South Holly Street
Denver, CO 80222
Phone: 303-972-9112 FAX: 303-972-9114
Region 6 RLB

As Constructed
No Revisions:
Revised:
Void:

I-25/SANTA FE INTERCHANGE
RAMP 1 FLYOVER
UNIT 2 PT LAYOUT (2 OF 3)

Designer: x
Detailer: K. Soellner
Sheet Subset: Bridge
Structure Numbers: F-16-XR
Subset Sheets: Bxx of XX

Project No./Code
IM 0254-394
16311
Sheet Number 150

soellner 1:55:03 PM K:\08276\16311\Phase 2\Bridge\Drawings\16311BRDG_PH2_F-16-XR_PTLay02b.dgn
9/27/2010 CDOT-DefaultPrinter_XM.pltcfg *

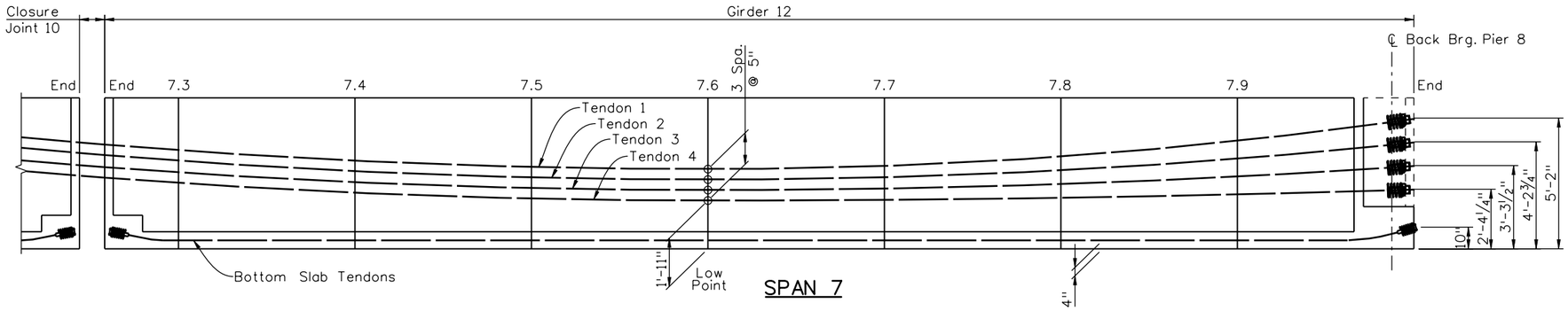

SPAN 7

TENDON INFORMATION

GIRDER 12									
TENDON	END	7.3L	7.4L	7.5L	7.6L	7.7L	7.8L	7.9L	END
1	49.68	47.00	42.00	39.00	38.00	39.50	44.00	51.50	62.00
2	44.68	42.00	37.00	34.00	33.00	34.11	37.44	42.98	50.75
3	38.90	36.40	31.73	28.93	28.00	28.72	30.87	34.47	39.50
4	33.90	31.40	26.73	23.93	23.00	23.33	24.31	25.95	28.25

* Dimensions, in inches, measured from bottom of girder to centerline of duct.
** Tenth points measured along centerline of girder on outside of curve.

TENDON DATA

TENDON NUMBER	1	2	3	4
# OF 0.6" DIA. STRANDS	24	24	24	24

BOTTOM SLAB TENDON DATA

GIRDER NUMBER	1	2	3	4	5
# OF 0.6" DIA. STRANDS	14	14	14	14	14
TYPE OF TENDON	7x0.6"	7x0.6"	7x0.6"	7x0.6"	7x0.6"

DESIGN:

Design is based on K=0.0002 and Meu=0.25. P(jack) at the jacking ends includes friction, anchor set of 1/4" at the jacking ends, elastic shortening, and provisions for an additional long term loss in stress per AASHTO guidelines.

All tendons shown assume 0.6"ø low relaxation strands.

P(jack) = 44 kips per strand in bottom tendons at jacking ends
= 308 kips per path (duct) for 7 x 0.6"ø tendons at jacking ends
= 527 kips per path (duct) for 12 x 0.6"ø tendons at jacking ends
f's = 270 ksi
f'c = 8000 psi girder concrete at 28 days field compressive strength (class PS)
= 5800 psi cast-in-place girder concrete at 28 days field compressive strength (class S40 or approved alternate)
f'ci = 4500 psi in closure pours prior to stressing tendons 1 thru 4

STRESSING SEQUENCE - SPANS 4 TO 7:

1. Stress and grout bottom slab tendons in girders in the casting yard prior to shipping to the bridge site.
2. Erect girder segments at bridge site.
3. Cast diaphragms, closures and grout precast panels over girders.
4. Stress tendons 1 thru 4 from both ends at Pier 4 and Pier 8. Stress tendons in both webs simultaneously, or stress in increments of 50% of the final force, alternating each side of the girder.

NOTES:

Reinforcement that interferes with the prestressing tendon alignment shall be adjusted as approved by the engineer.

All dimensions are to the centerline of the duct. Deviations from the duct arrangement shown will not be approved. Small changes in the force per duct and the path of each duct must be approved by the engineer. Alternative strand sizes are acceptable.

Use low-relaxation strands meeting the requirements of ASTM A416 Grade 270. The contractor shall submit elongation calculations based on friction, wobble and anchor set.

The contractor shall survey the bridge prior to casting to verify that the minimum thickness of all elements of the deck slab will be maintained or exceeded.

Revision Dates (Preliminary Stage Only)

Design			Detail			Quantities		
	INITIAL	DATE		INITIAL	DATE		INITIAL	DATE
Designed By	GAR	08/10	Detailed By	RAD	08/10	Quantities By		
Checked By			Checked By	GAR	10/10	Checked By		

soellner 1:48:49 PM K:\08276\16311\Phase 2\Bridge\Drawings\16311BRDG_PH2_F-16-XR_PTLay02c.dgn
9/27/2010 CDOT-PDFDraftQuality_XM.pltcfg *

Print Date: 9/27/2010	
File Name: 16311BRDG_PH2_F-16-XR_PTLay02c.dgn	
Horiz. Scale: 1:1	Vert. Scale: As Noted
Unit Information	Unit Leader Initials

Summit Engineering Group, Incorporated
CONSULTING STRUCTURAL ENGINEERS
10822 Teller Drive Suite 330
Littleton, CO 80127

Sheet Revisions		
Date:	Comments	Init.

Colorado Department of Transportation
DEPARTMENT OF TRANSPORTATION
2000 South Holly Street
Denver, CO 80222
Phone: 303-972-9112 FAX: 303-972-9114
Region 6 RLB

As Constructed	
No Revisions:	
Revised:	
Void:	

I-25/SANTA FE INTERCHANGE
RAMP 1 FLYOVER
UNIT 2 PT LAYOUT (3 OF 3)

Designer:	x	Structure Numbers	F-16-XR
Detailer:	K. Soellner		
Sheet Subset:	Bridge	Subset Sheets:	Bxx of XX

Project No./Code	
IM 0254-394	
16311	
Sheet Number	151

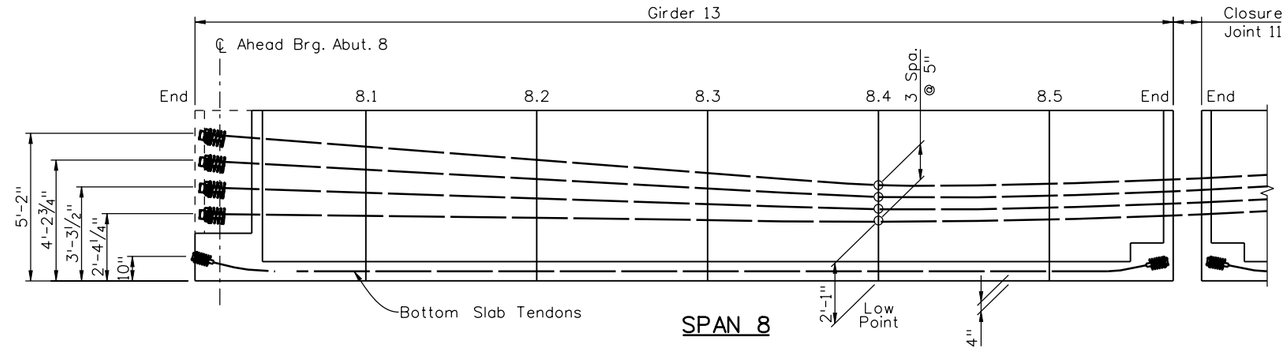

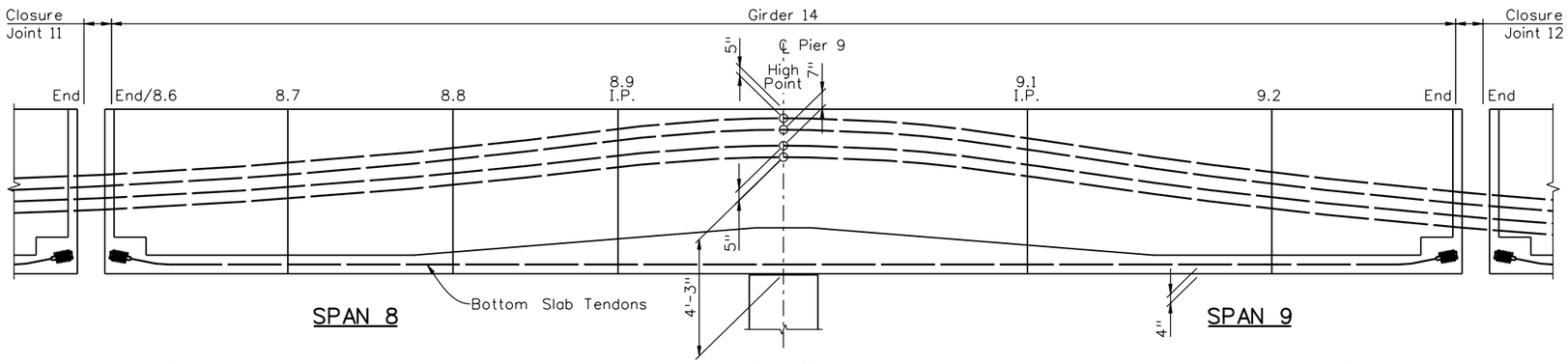

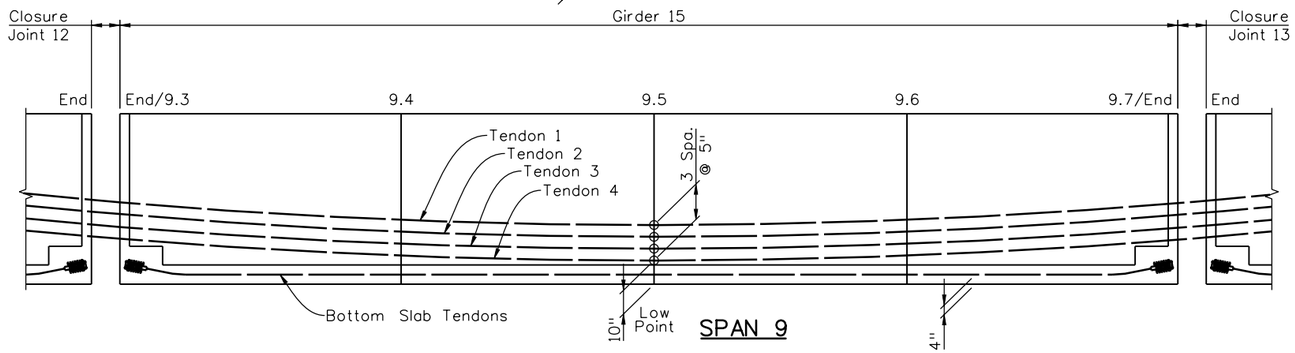

TENDON INFORMATION

GIRDER 13								GIRDER 14									GIRDER 15						
TENDON	END	8.1L	8.2L	8.3L	8.4L	8.5L	END	END	8.6L	8.7L	8.8L	8.9L	PIER 9	9.1L	9.2L	END	END	9.3L	9.4L	9.5L	9.6L	9.7L	END
1																							
2																							
3																							
4																							

* Dimensions, in inches, measured from bottom of girder to centerline of duct.
** Tenth points measured along centerline of girder on outside of curve.

Revision Dates (Preliminary Stage Only)

Design			Detail			Quantities		
	INITIAL	DATE		INITIAL	DATE		INITIAL	DATE
Designed By	GAR	08/10	Detailed By	RAD	08/10	Quantities By		
Checked By			Checked By	GAR	10/10	Checked By		

Print Date: 9/27/2010
File Name: 16311BRDG_PH2_F-16-XR_PTLay03a.dgn
Horiz. Scale: 1:1 Vert. Scale: As Noted
Unit Information Unit Leader Initials

Summit Engineering Group, Incorporated
CONSULTING STRUCTURAL ENGINEERS
10822 Teller Drive Suite 330
Littleton, CO 80127

Sheet Revisions		
Date:	Comments	Init.

Colorado Department of Transportation
DEPARTMENT OF TRANSPORTATION
2000 South Holly Street
Denver, CO 80222
Phone: 303-972-9112 FAX: 303-972-9114
Region 6 RLB

As Constructed
No Revisions:
Revised:
Void:

I-25/SANTA FE INTERCHANGE
RAMP 1 FLYOVER
UNIT 3 PT LAYOUT (1 OF 3)

Designer: x
Detailer: K. Soellner
Sheet Subset: Bridge
Structure Numbers: F-16-XR
Subset Sheets: Bxx of XX

Project No./Code
IM 0254-394
16311
Sheet Number 152

soellner 1:48:53 PM K:\08276\16311\Phase 2\Bridge\Drawings\16311BRDG_PH2_F-16-XR_PTLay03a.dgn
9/27/2010 CDOT-PDFDraftQuality_XM.pltcfg *

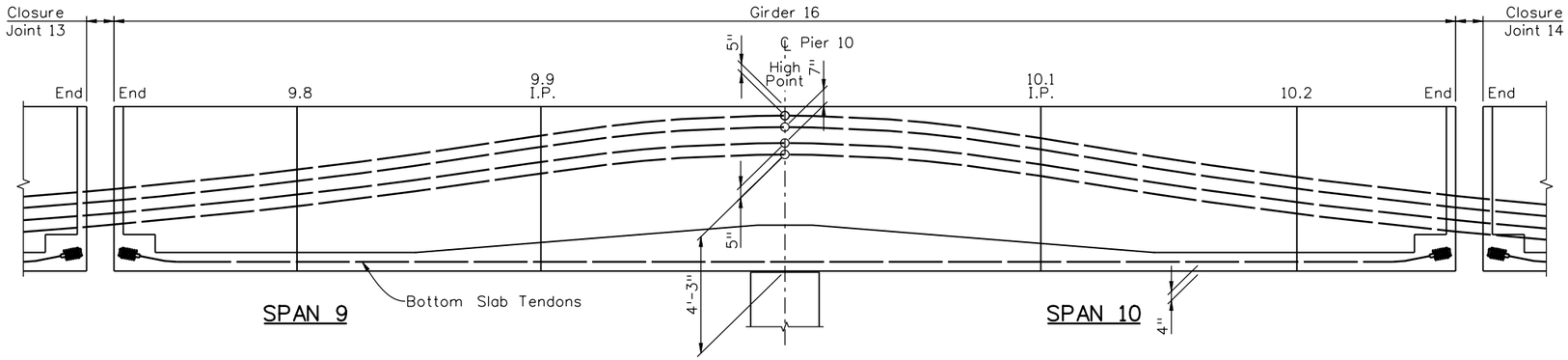

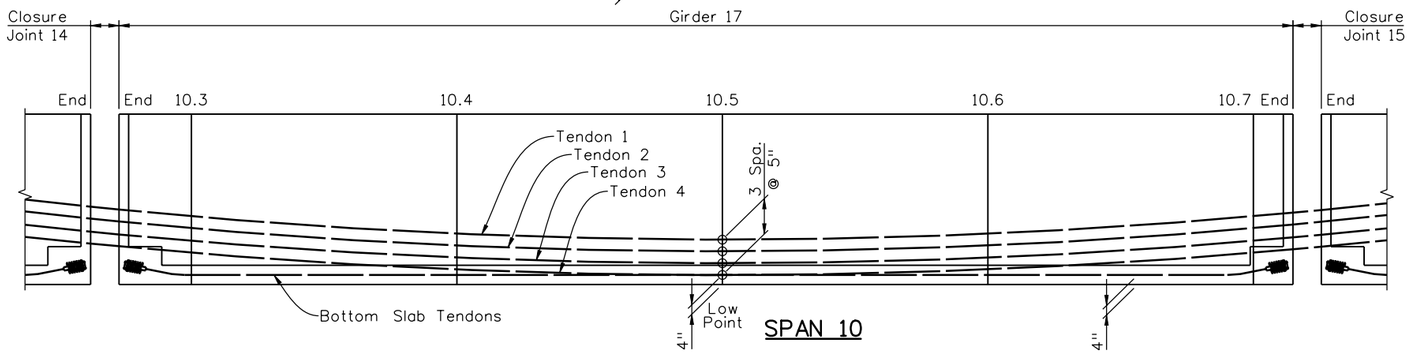

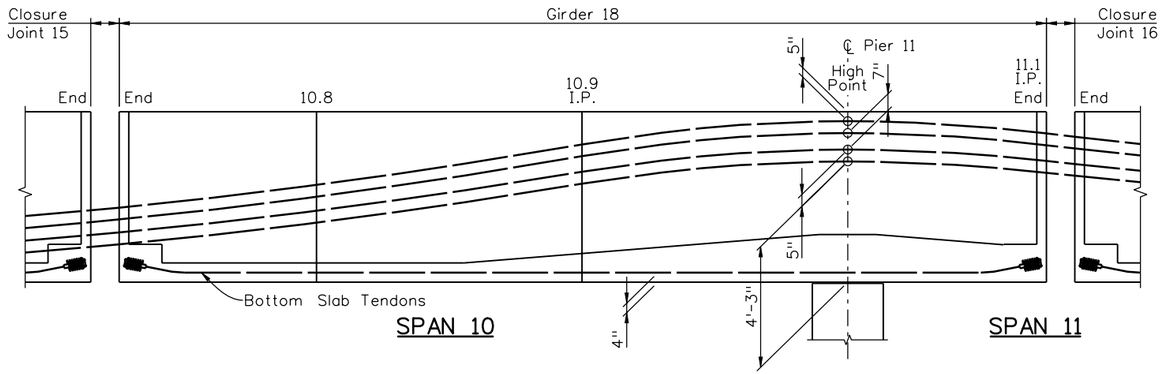

TENDON INFORMATION

	GIRDER 16							GIRDER 17							GIRDER 18					
TENDON	END	9.8L	9.9L	PIER 10	10.1L	10.20	END	END	10.3L	10.4L	10.5L	10.6L	10.7L	END	END	10.8L	10.9L	PIER 11	11.1L	END
1																				
2																				
3																				
4																				

* Dimensions, in inches, measured from bottom of girder to centerline of duct.
** Tenth points measured along centerline of girder on outside of curve.

Revision Dates (Preliminary Stage Only)

Design	INITIAL	DATE
Designed By	GAR	08/10
Checked By		

Detail	INITIAL	DATE
Detailed By	RAD	08/10
Checked By	GAR	10/10

Quantities	INITIAL	DATE
Quantities By		
Checked By		

soellner 1:48:57 PM K:\08276\16311\Phase 2\Bridge\Drawings\16311BRDG_PH2_F-16-XR_PTLay03b.dgn
9/27/2010 CDOT-PDFDraftQuality_XM.pltcfg *

Print Date: 9/27/2010
File Name: 16311BRDG_PH2_F-16-XR_PTLay03b.dgn
Horiz. Scale: 1:1 Vert. Scale: As Noted
Unit Information Unit Leader Initials

Summit Engineering Group, Incorporated
CONSULTING STRUCTURAL ENGINEERS
10822 Toller Drive Suite 330
Littleton, CO 80127

Sheet Revisions

Date:	Comments	Init.

Colorado Department of Transportation
DEPARTMENT OF TRANSPORTATION
2000 South Holly Street
Denver, CO 80222
Phone: 303-972-9112 FAX: 303-972-9114
Region 6 RLB

As Constructed
No Revisions:
Revised:
Void:

I-25/SANTA FE INTERCHANGE
RAMP 1 FLYOVER
UNIT 3 PT LAYOUT (2 OF 3)

Designer: x
Detailer: K. Soellner
Sheet Subset: Bridge
Structure Numbers: F-16-XR
Subset Sheets: Bxx of XX

Project No./Code
IM 0254-394
16311
Sheet Number 153

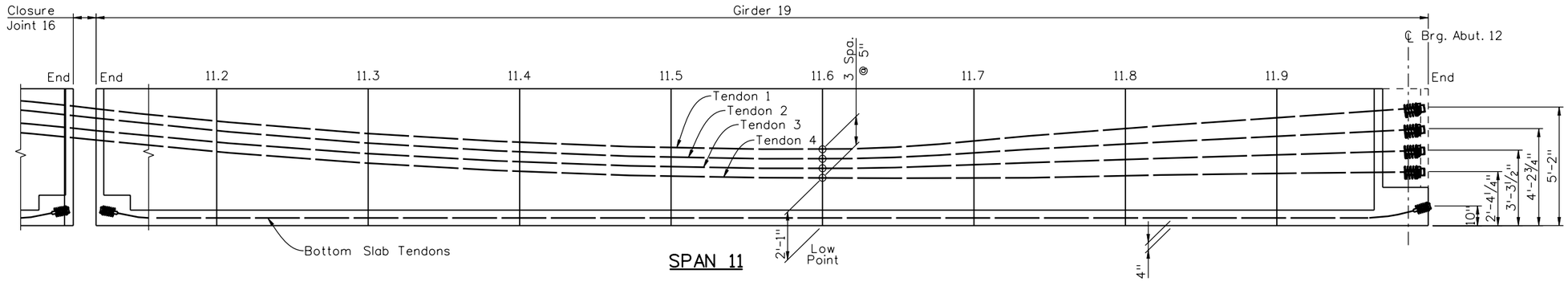

SPAN 11

TENDON INFORMATION

GIRDER 19										
TENDON	END	11.2L	11.3L	11.4L	11.5L	11.6L	11.7L	11.8L	11.9L	END
1										
2										
3										
4										

* Dimensions, in inches, measured from bottom of girder to centerline of duct.
** Tenth points measured along centerline of girder on outside of curve.

TENDON DATA

TENDON NUMBER	1	2	3	4
# OF 0.6" DIA. STRANDS	24	24	24	24

BOTTOM SLAB TENDON DATA

GIRDER NUMBER	1	2	3	4	5
# OF 0.6" DIA. STRANDS	14	14	14	14	14
TYPE OF TENDON	7x0.6"	7x0.6"	7x0.6"	7x0.6"	7x0.6"

DESIGN:

Design is based on K=0.0002 and Meu=0.25. P(jack) at the jacking ends includes friction, anchor set of 1/4" at the jacking ends, elastic shortening, and provisions for an additional long term loss in stress per AASHTO guidelines.

All tendons shown assume 0.6"ø low relaxation strands.

P(jack) = 44 kips per strand in bottom tendons at jacking ends
= 308 kips per path (duct) for 7 x 0.6"ø tendons at jacking ends
= 527 kips per path (duct) for 12 x 0.6"ø tendons at jacking ends
f's = 270 ksi
f'c = 8000 psi girder concrete at 28 days field compressive strength (class PS)
= 5800 psi cast-in-place girder concrete at 28 days field compressive strength (class S40 or approved alternate)
f'ci = 4500 psi in closure pours prior to stressing tendons 1 thru 4

STRESSING SEQUENCE - SPANS 8 TO 11:

1. Stress and grout bottom slab tendons in girders in the casting yard prior to shipping to the bridge site.
2. Erect girder segments at bridge site.
3. Cast diaphragms, closures and grout precast panels over girders.
4. Stress tendons 1 thru 4 from both ends at Pier 8 and Abutment 12. Stress tendons in both webs simultaneously, or stress in increments of 50% of the final force, alternating each side of the girder.

NOTES:

Reinforcement that interferes with the prestressing tendon alignment shall be adjusted as approved by the engineer.

All dimensions are to the centerline of the duct. Deviations from the duct arrangement shown will not be approved. Small changes in the force per duct and the path of each duct must be approved by the engineer. Alternative strand sizes are acceptable.

Use low-relaxation strands meeting the requirements of ASTM A416 Grade 270. The contractor shall submit elongation calculations based on friction, wobble and anchor set.

The contractor shall survey the bridge prior to casting to verify that the minimum thickness of all elements of the deck slab will be maintained or exceeded.

Revision Dates (Preliminary Stage Only)

Design			Detail			Quantities		
	INITIAL	DATE		INITIAL	DATE		INITIAL	DATE
Designed By	GAR	08/10	Detailed By	RAD	08/10	Quantities By		
Checked By			Checked By	GAR	10/10	Checked By		

soellner 1:49:01 PM K:\08276\16311\Phase 2\Bridge\Drawings\16311BRDG_PH2_F-16-XR_PTLay03c.dgn
9/27/2010 CDOT-PDFDraftQuality_XM.pltcfg *

Print Date: 9/27/2010
File Name: 16311BRDG_PH2_F-16-XR_PTLay03c.dgn
Horiz. Scale: 1:1 Vert. Scale: As Noted
Unit Information Unit Leader Initials

Summit Engineering Group, Incorporated
CONSULTING STRUCTURAL ENGINEERS
10822 Teller Drive Suite 330
Littleton, CO 80127

Sheet Revisions		
Date:	Comments	Init.

Colorado Department of Transportation
DEPARTMENT OF TRANSPORTATION
2000 South Holly Street
Denver, CO 80222
Phone: 303-972-9112 FAX: 303-972-9114
Region 6 RLB

As Constructed
No Revisions:
Revised:
Void:

I-25/SANTA FE INTERCHANGE
RAMP 1 FLYOVER
UNIT 3 PT LAYOUT (3 OF 3)

Designer:	x	Structure Numbers	F-16-XR
Detailer:	K. Soellner		
Sheet Subset:	Bridge	Subset Sheets:	Bxx of XX

Project No./Code
IM 0254-394
16311
Sheet Number 154

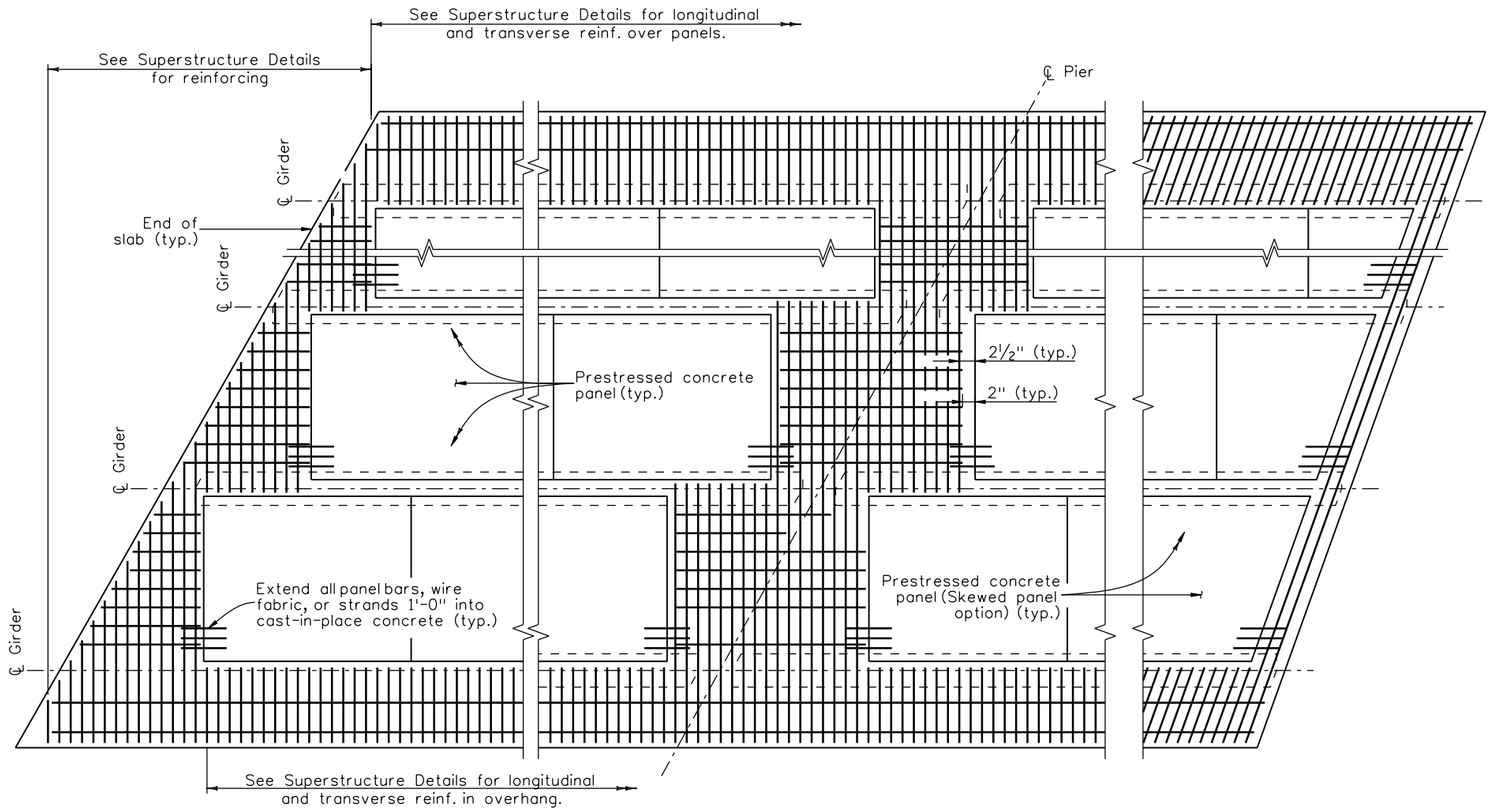

END OF SLAB RECTANGULAR PANEL OPTION AND SKEWS LESS THAN 70°

Rectangular panel option shall be used for skews less than 70°.

CONTINUOUS SLAB OVER PIER

PART PLAN

END OF SLAB SKEWED PANEL OPTION FOR SKEWS 70° to 90°

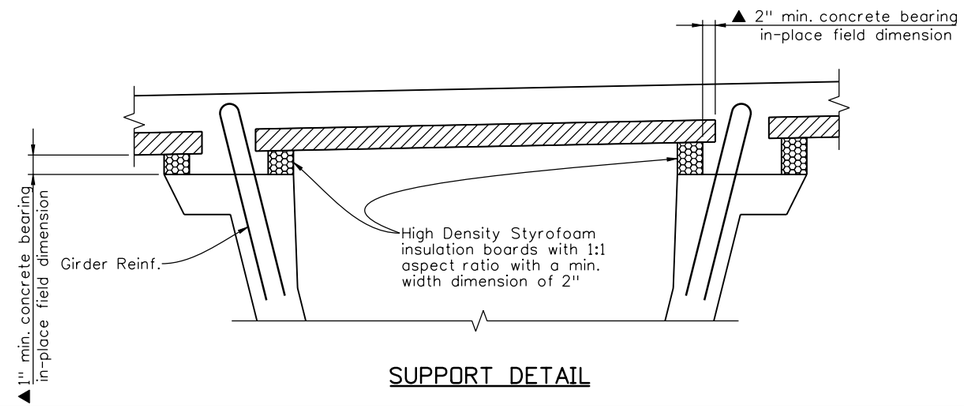

SUPPORT DETAIL

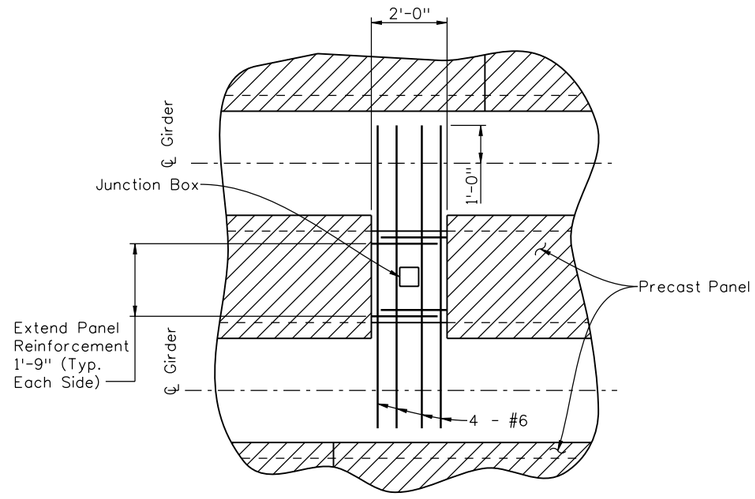

JUNCTION BOX DETAIL

(Bottom Slab Reinforcing shown, See Slab Details for Top Slab Reinforcing)

NOTES:

Composite total slab designed for HS 25-44 and Alternate Military Loading.

All concrete shall be Class PS with release strength f'_{ci} = 4500 psi and minimum 28 day strength f'_c = 6000 psi. Entrained air is not required for precast panel deck form concrete. The strength shall be at least 5000 psi at the time of the deck pour.

Use ⅜"Ø low relaxation strands meeting the requirements of ASTM A416 grade 270. Jacking force per strand (F_i) shall be at least 17.2 kips. Final force per strand (F_f) is estimated to be 14.2 kips.

Installation of Bar U (#3) is mandatory. All four Bar U (#3) loops shall be used simultaneously for lifting the panels.

Care must be taken to ensure proper cleaning of construction debris off the tops of the panels and consolidation of concrete mortar under the edges of the panels. Water, dirt or other debris on top of the panels will inhibit the bond of the cast-in-place concrete. It is also important that adequate space (▲ min. 1" x 2") is provided for the concrete to fill the space under the panel as the slab concrete is placed. Panel lengths and width shall be determined by the Contractor and shown on the shop plans.

The Contractor is responsible for the stability of the panels on the girders. Erected panels shall be uniformly supported along the length of the panel. The Contractor is responsible for meeting the total slab thickness shown on the Superstructure Details.

All planes of reinforcing steel shown in the superstructure details are required for areas not formed with precast panels.

For Electrical Junction Boxes, Concrete Insert and Utility Hanger locations, See Construction Layout.

Revision Dates (Preliminary Stage Only): MM/YY

Design	INITIAL	DATE
Designed By		
Checked By		

Detail	INITIAL	DATE
Detailed By	KJS	09/10
Checked By		

Quantities	INITIAL	DATE
Quantities By		
Checked By		

soellner 1:49:05 PM K:\08276\16311\Phase 2\Bridge\Drawings\16311BRDG_PH2_F-16-XR_DeckPanel01.dgn
9/27/2010 CDOT-PDFDraftQuality_XM.pltcfg

Print Date: 9/27/2010
File Name: 16311BRDG_PH2_F-16-XR_DeckPanel01.dgn
Horiz. Scale: 1:1 Vert. Scale: As Noted
Unit Information Unit Leader Initials

Summit Engineering Group, Incorporated — Consulting Structural Engineers
10822 Tolter Drive Suite 330
Littleton, CO 80127

Sheet Revisions		
Date:	Comments	Init.

Colorado Department of Transportation
DEPARTMENT OF TRANSPORTATION
2000 South Holly Street
Denver, CO 80222
Phone: 303-972-9112 FAX: 303-972-9114
Region 6 RLB

As Constructed
No Revisions:
Revised:
Void:

I-25/SANTA FE INTERCHANGE
RAMP 1 FLYOVER
PRECAST PANEL DECK FORM (1 OF 2)

Designer:	x	Structure Numbers	F-16-XR
Detailer:	K. Soellner		
Sheet Subset:	Bridge	Subset Sheets:	x of x

Project No./Code	
IM 0254-394	
16311	
Sheet Number	155

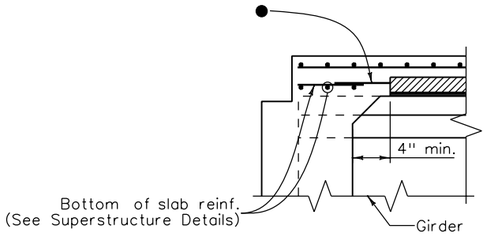

SECTION AT ABUTMENT

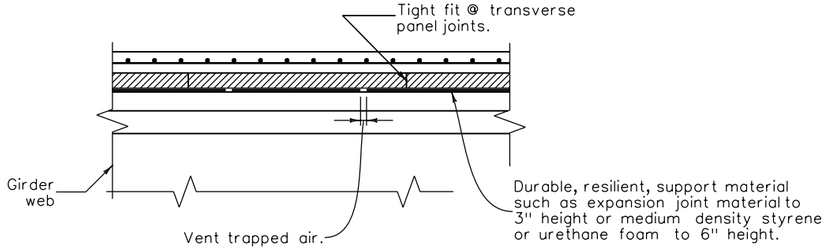

SECTION THRU TRANSVERSE
PANEL JOINTS

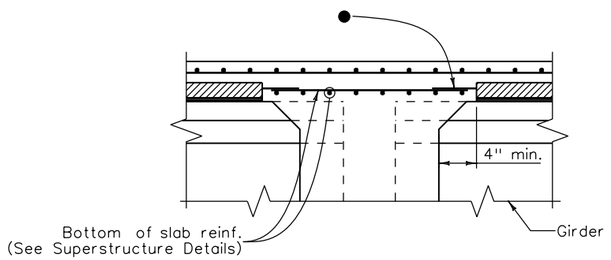

SECTION AT PIER

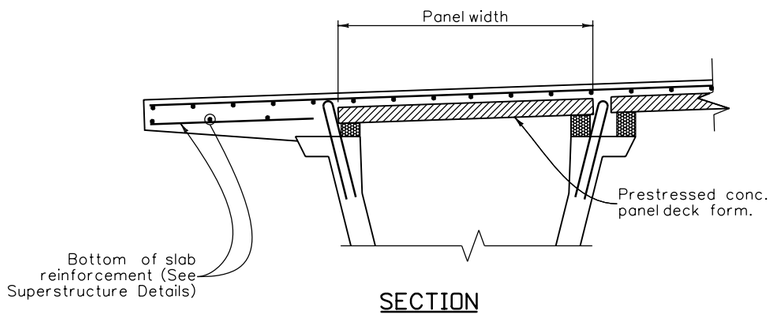

SECTION

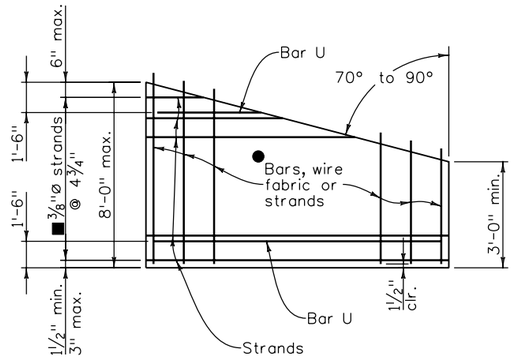

PLAN - SKEWS 70° TO 90°
OPTIONAL END PANEL

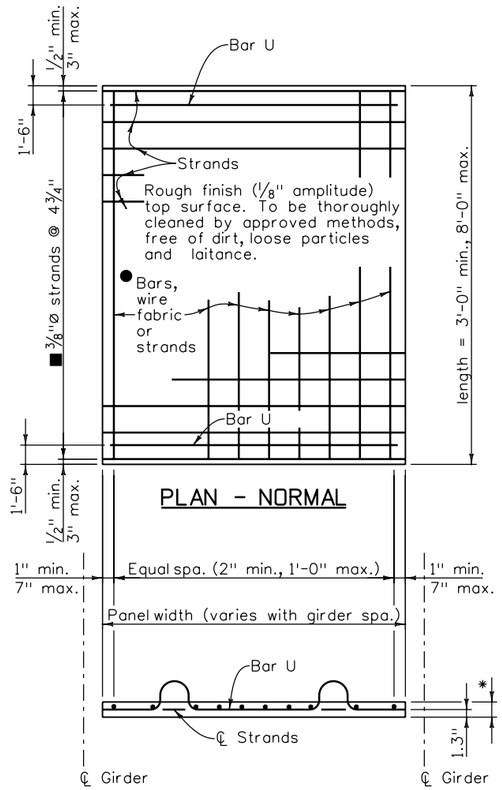

PRESTRESSED PANEL DETAILS

NOTES:

Sawing of panels is acceptable in areas where projecting reinforcement is not required. It is desirable to have the prestressing strands project from the panels as long as the projecting strands do not interfere with other bridge components.

● Reinforcing perpendicular to strands may be deformed reinf. bars, welded wire fabric, or welded deformed bar mats, and shall be placed directly above the strands. Minimum area of reinforcing perpendicular to strands shall be 0.11 sq. in. per ft. Tensioned or untensioned strands may also be used. These individual bars or wires shall be no larger than .375" diameter. For location of longitudinal bar extensions, see sheet 2 of 2.

■ May be reduced to ⅜"Ø strands at 9½" when the panel width is less than 5'-7" and the design span is less than 7'-7".

The longitudinal reinforcing steel in the cast-in-place portion of the deck may rest directly on the panels as necessary to obtain clearances at the top of deck, unless otherwise noted.

The tolerance on strand placement shall not exceed ±¼".

The tolerance on panel thickness shall not exceed ±¼".

Concentrated construction loads shall not exceed 500 lb for 3" panels, 700 lb for 3.5" panels, nor 1100 lb for 4" panels unless the load is distributed to less than 117 psf.

Total loads applied to any panel during construction shall not exceed 117 psf.

Bottom flexural cracks, sags greater than .5", or cambers greater than .5" will be considered evidence of mishandling, overloading, or exceeding allowable tolerances, and may be cause for rejecting panels at the Engineer's discretion.

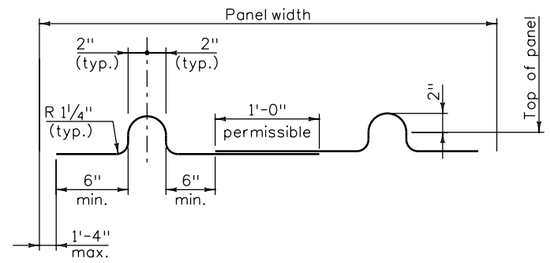

BAR U (#3)
PRESTRESSED PANEL DETAILS

* 3" or 4", See Superstructure Section for details.

Design	INITIAL	DATE
Designed By		
Checked By		

Detail	INITIAL	DATE
Detailed By	KJS	09/10
Checked By		

Quantities	INITIAL	DATE
Quantities By		
Checked By		

Revision Dates (Preliminary Stage Only)
MM/YY

soellner 1:49:08 PM K:\08276\16311\Phase 2\Bridge\Drawings\16311BRDG_PH2_F-16-XR_DeckPanel02.dgn
9/27/2010 CDOT-PDFDraftQuality_XM.pltcfg *

Print Date: 9/27/2010
File Name: 16311BRDG_PH2_F-16-XR_DeckPanel02.dgn
Horiz. Scale: 1:1 Vert. Scale: As Noted
Unit Information Unit Leader Initials

Summit Engineering Group, Incorporated
Consulting Structural Engineers
10822 Teller Drive Suite 330
Littleton, CO 80127

Sheet Revisions		
Date:	Comments	Init.

Colorado Department of Transportation
CDOT DEPARTMENT OF TRANSPORTATION
2000 South Holly Street
Denver, CO 80222
Phone: 303-972-9112 FAX: 303-972-9114
Region 6 RLB

As Constructed	
No Revisions:	
Revised:	
Void:	

I-25/SANTA FE INTERCHANGE
RAMP 1 FLYOVER
PRECAST PANEL DECK FORM (2 OF 2)

Designer:	X	Structure Numbers	F-16-XR
Detailer:	K. Soellner		
Sheet Subset:	Bridge	Subset Sheets:	x of x

Project No./Code
IM 0254-394
16311
Sheet Number 156

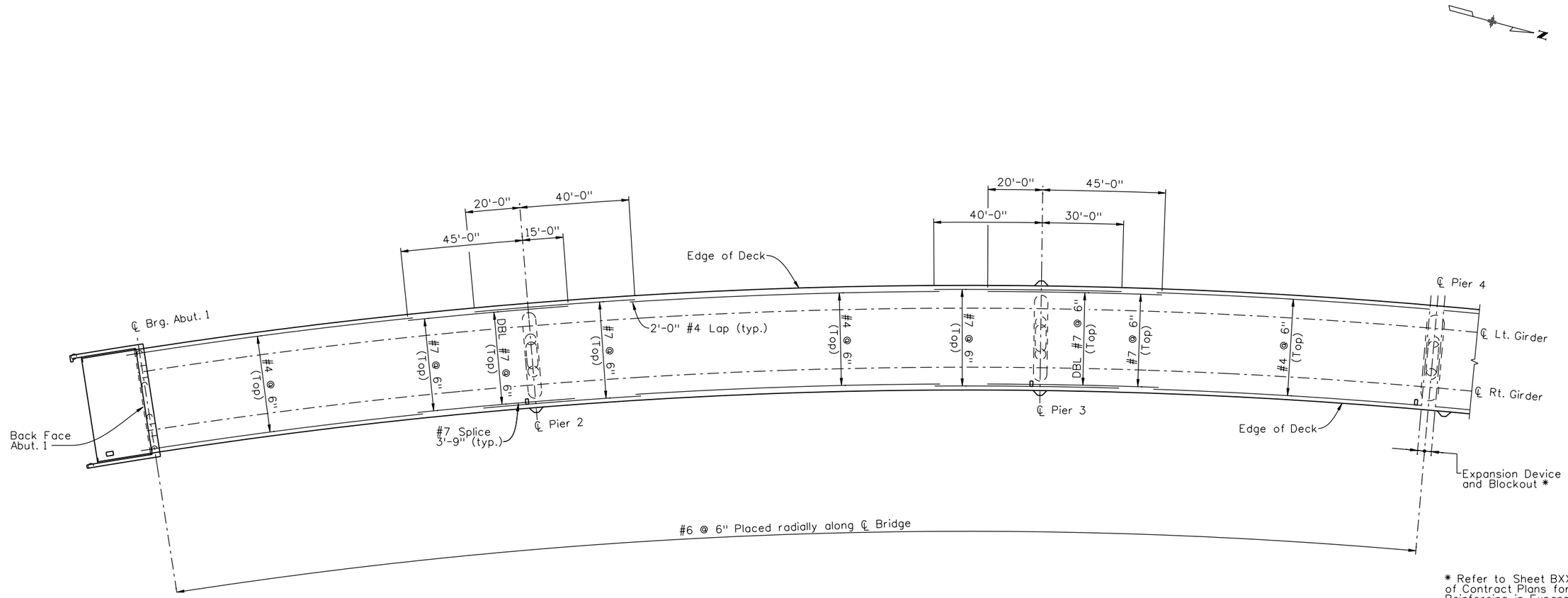

NOTES:

1. Botton Steel not shown. Refer to Sheet Unit 1 Typical Section for additional Slab and Reinforcing Details.
2. Stagger Splices by a minimum of 2'-0".
3. See Construction Layout for Bridge Drain Locations. See Slab Details for additional Reinforcing at Bridge Drains.

Design	INITIAL	DATE	Detail	INITIAL	DATE	Quantities	INITIAL	DATE
Designed By	GR/PRS	08/10	Detailed By	RAD	08/10	Quantities By		
Checked By			Checked By	PRS		Checked By		

Revision Dates (Preliminary Stage Only)

soellner 1:49:14 PM K:\08276\16311\Phase 2\Bridge\Drawings\16311BRDG_PH2_F-16-XR_DeckReinf01.dgn
9/27/2010 CDOT-PDFDraftQuality_XM.pltcfg *

Print Date: 9/27/2010
File Name: 16311BRDG_PH2_F-16-XR_DeckReinf01.dgn
Horiz. Scale: 1:40 Vert. Scale: As Noted
Unit Information Unit Leader Initials

Summit Engineering Group, Incorporated Consulting Structural Engineers
10822 Toller Drive Suite 330 Littleton, CO 80127

Sheet Revisions		
Date:	Comments	Init.

Colorado Department of Transportation
DOT Department of Transportation
2000 South Holly Street
Denver, CO 80222
Phone: 303-972-9112 FAX: 303-972-9114
Region 6 RLB

As Constructed
No Revisions:
Revised:
Void:

I-25/SANTA FE INTERCHANGE
RAMP 1 FLYOVER
UNIT 1 DECK REINFORCING PLAN

Designer:	G. Reese	Structure Numbers	F-16-XR
Detailer:	M. Eberly		
Sheet Subset:	Bridge	Subset Sheets:	B of XX

Project No./Code
IM 0254-394
16311
Sheet Number 157

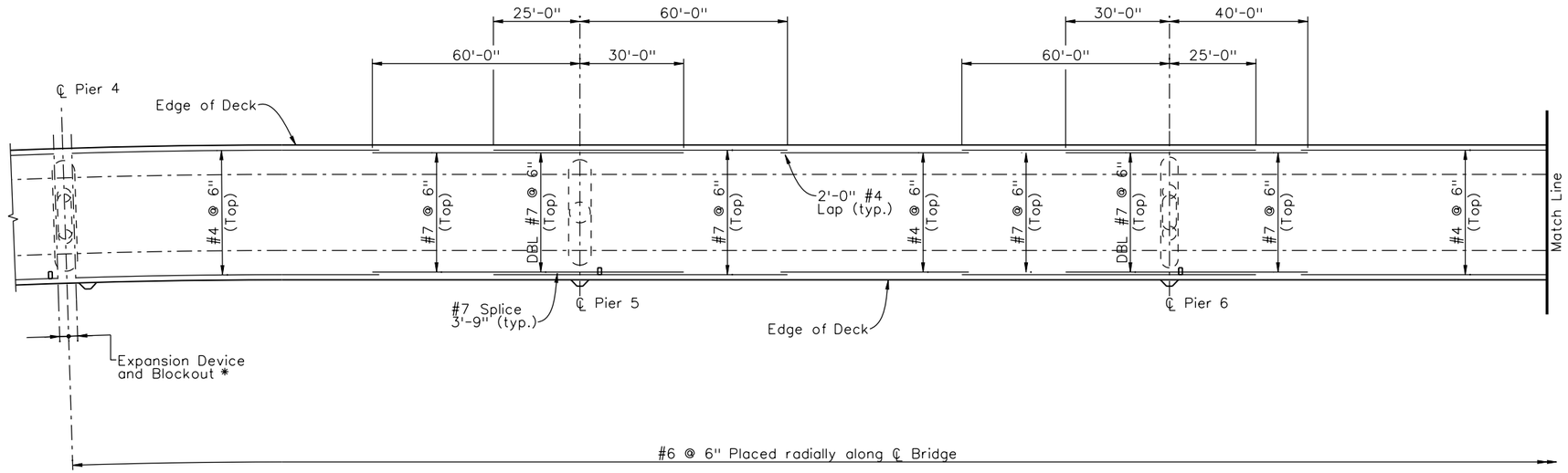

* Refer to Sheet BXX of Contract Plans for Reinforcing in Expansion Device Blockout

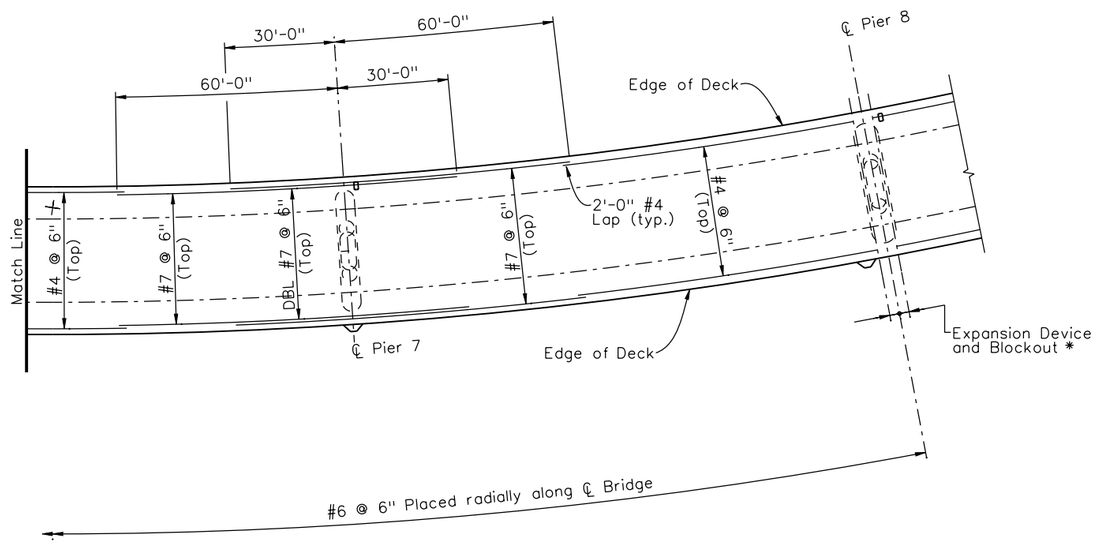

NOTES:

1. Botton Steel not shown. Refer to Sheet Unit 1 Typical Section for additional Slab and Reinforcing Details.
2. Stagger Splices by a minimum of 2'-0".
3. See Construction Layout for Bridge Drain Locations. See Slab Details for additional Reinforcing at Bridge Drains.

Revision Dates (Preliminary Stage Only)

Design	INITIAL	DATE
Designed By	GR/PRS	08/10
Checked By		

Detail	INITIAL	DATE
Detailed By	RAD	08/10
Checked By	PRS	

Quantities	INITIAL	DATE
Quantities By		
Checked By		

soellner 1:49:18 PM K:\08276\16311\Phase 2\Bridge\Drawings\16311BRDG_PH2_F-16-XR_DeckReinf02.dgn
9/27/2010 CDOT-PDFDraftQuality_XM.pltcfg *

Print Date: 9/27/2010
File Name: 16311BRDG_PH2_F-16-XR_DeckReinf02.dgn
Horiz. Scale: 1:40 Vert. Scale: As Noted
Unit Information Unit Leader Initials

Summit Engineering Group, Incorporated — Consulting Structural Engineers
10822 Toller Drive Suite 330
Littleton, CO 80127

Sheet Revisions		
Date:	Comments	Init.

Colorado Department of Transportation
2000 South Holly Street
Denver, CO 80222
Phone: 303-972-9112 FAX: 303-972-9114
Region 6 RLB

As Constructed
No Revisions:
Revised:
Void:

I-25/SANTA FE INTERCHANGE
RAMP 1 FLYOVER
UNIT 2 DECK REINFORCING PLAN

Designer: G. Reese
Detailer: M. Eberly
Sheet Subset: Bridge
Structure Numbers: F-16-XR
Subset Sheets: B of XX

Project No./Code
IM 0254-394
16311
Sheet Number 158

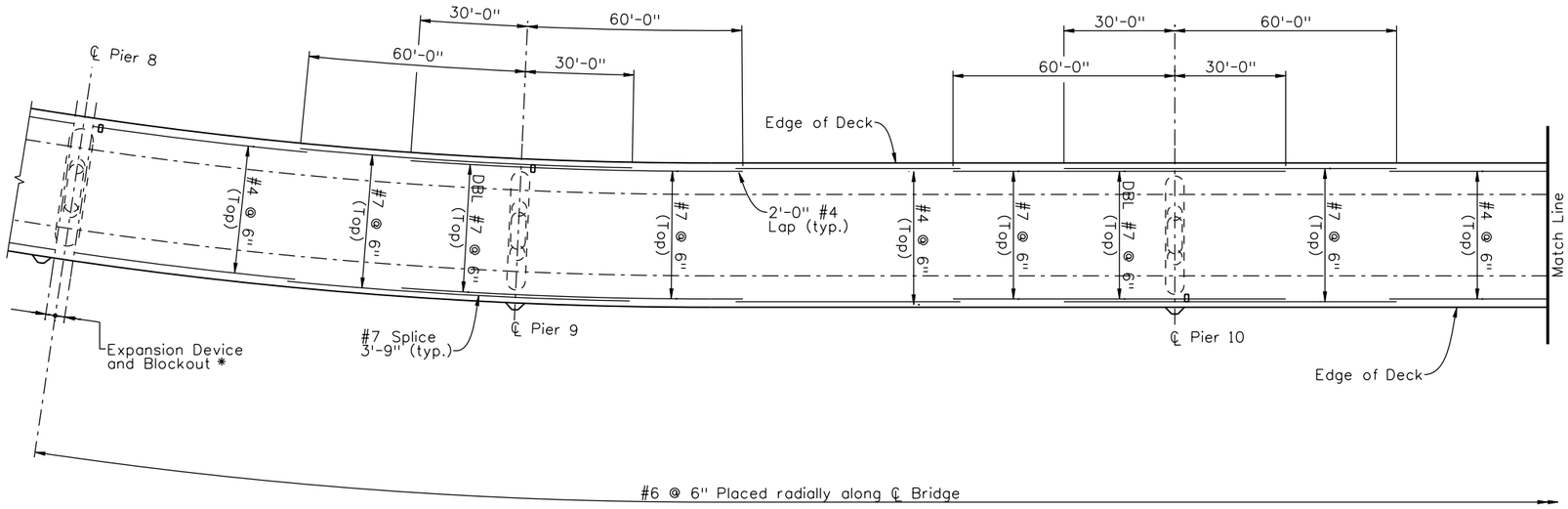

* Refer to Sheet BXX of Contract Plans for Reinforcing in Expansion Device Blockout

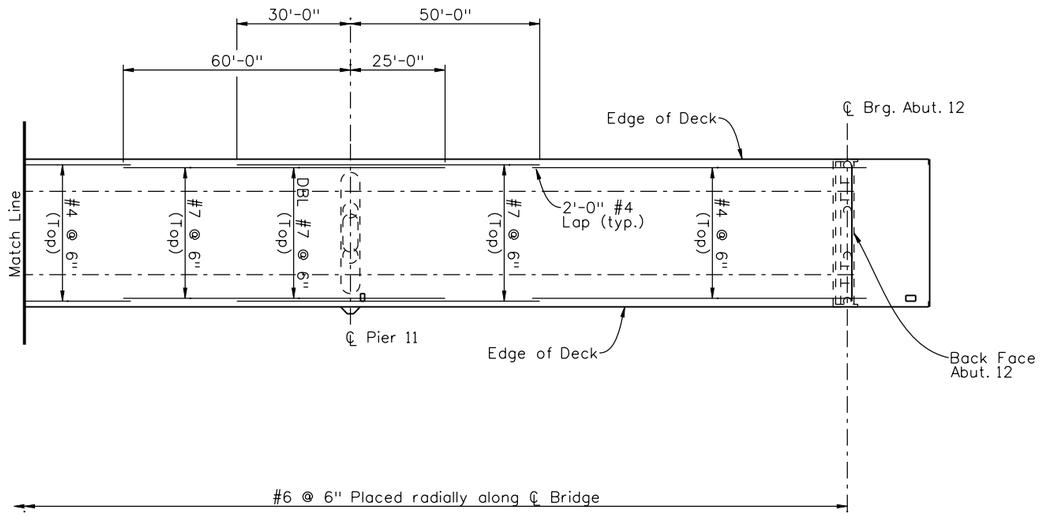

NOTES:

1. Botton Steel not shown. Refer to Sheet Unit 1 Typical Section for additional Slab and Reinforcing Details.
2. Stagger Splices by a minimum of 2'-0".
3. See Construction Layout for Bridge Drain Locations. See Slab Details for additional Reinforcing at Bridge Drains.

Revision Dates (Preliminary Stage Only)

Design	INITIAL	DATE
Designed By	GR/PRS	08/10
Checked By		

Detail	INITIAL	DATE
Detailed By	RAD	08/10
Checked By	PRS	

Quantities	INITIAL	DATE
Quantities By		
Checked By		

soelner 1:49:20 PM K:\08276\16311\Phase 2\Bridge\Drawings\16311BRDG_PH2_F-16-XR_DeckReinf03.dgn
9/27/2010 CDOT-PDFDraftQuality_XM.pltcfg *

Print Date: 9/27/2010
File Name: 16311BRDG_PH2_F-16-XR_DeckReinf03.dgn
Horiz. Scale: 1:40 Vert. Scale: As Noted
Unit Information Unit Leader Initials

Summit Engineering Group, Incorporated — Consulting Structural Engineers
10822 Teller Drive Suite 330
Littleton, CO 80127

Sheet Revisions		
Date:	Comments	Init.

Colorado Department of Transportation
DEPARTMENT OF TRANSPORTATION
2000 South Holly Street
Denver, CO 80222
Phone: 303-972-9112 FAX: 303-972-9114
Region 6 RLB

As Constructed
No Revisions:
Revised:
Void:

I-25/SANTA FE INTERCHANGE
RAMP 1 FLYOVER
UNIT 3 DECK REINFORCING PLAN

Designer:	G. Reese	Structure Numbers	F-16-XR
Detailer:	M. Eberly		
Sheet Subset:	Bridge	Subset Sheets:	B of XX

Project No./Code
IM 0254-394
16311
Sheet Number 159

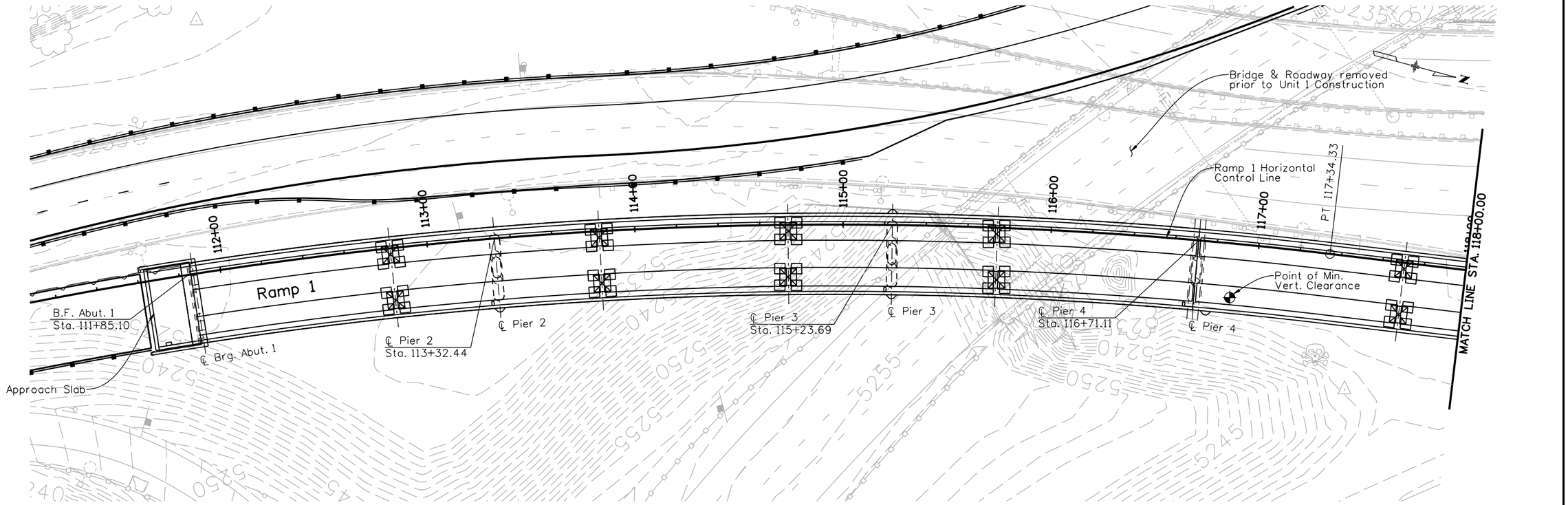

PLAN

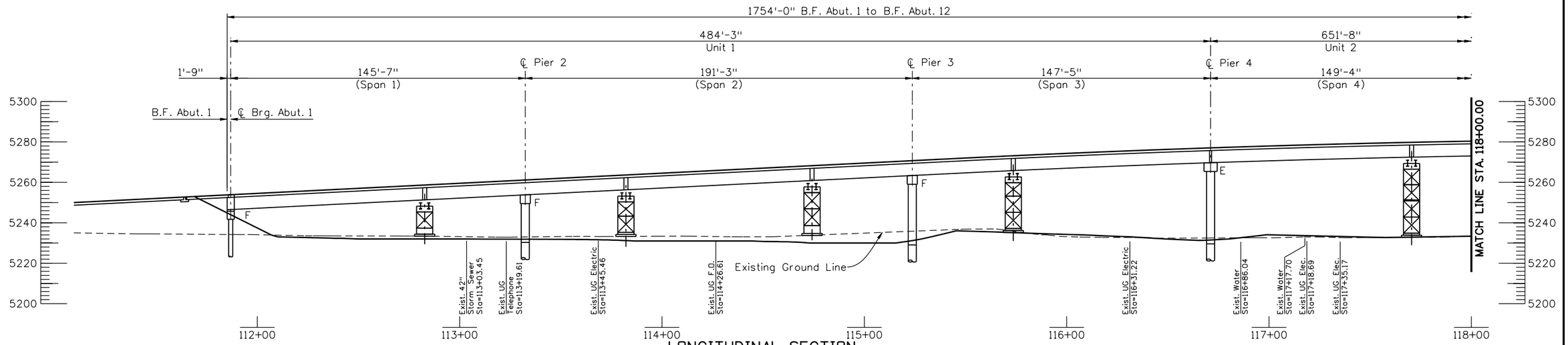

LONGITUDINAL SECTION
Taken at Ramp 1 HCL

Design			Detail			Quantities		
	INITIAL	DATE		INITIAL	DATE		INITIAL	DATE
Designed By			Detailed By	KJS	08/10	Quantities By		
Checked By			Checked By			Checked By		

Revision Dates (Preliminary Stage Only)

Print Date: 9/27/2010	
File Name: 16311BRDG_PH2_F-16-XR_FalseworkCon01.dgn	
Horiz. Scale: 1:50	Vert. Scale: As Noted
Unit Information	Unit Leader Initials

Summit Engineering Group, Incorporated — Consulting Structural Engineers
10822 Teller Drive Suite 330
Littleton, CO 80127

Sheet Revisions		
Date:	Comments	Init.

Colorado Department of Transportation
DOT — Department of Transportation
2000 South Holly Street
Denver, CO 80222
Phone: 303-972-9112 FAX: 303-972-9114
Region 6 RLB

As Constructed	
No Revisions:	
Revised:	
Void:	

I-25/SANTA FE INTERCHANGE
RAMP 1 FLYOVER
FALSEWORK CONSTRAINTS (1 OF 3)

Designer:	G. Reese	Structure Numbers	F-16-XR
Detailer:	K. Soellner		
Sheet Subset:	Bridge	Subset Sheets:	B of XX

Project No./Code	
IM 0254-394	
16311	
Sheet Number	160

soellner 1:49:26 PM K:\08276\16311\Phase 2\Bridge\Drawings\16311BRDG_PH2_F-16-XR_FalseworkCon01.dgn
9/27/2010 CDOT-PDFDraftQuality_XM.pltcfg *

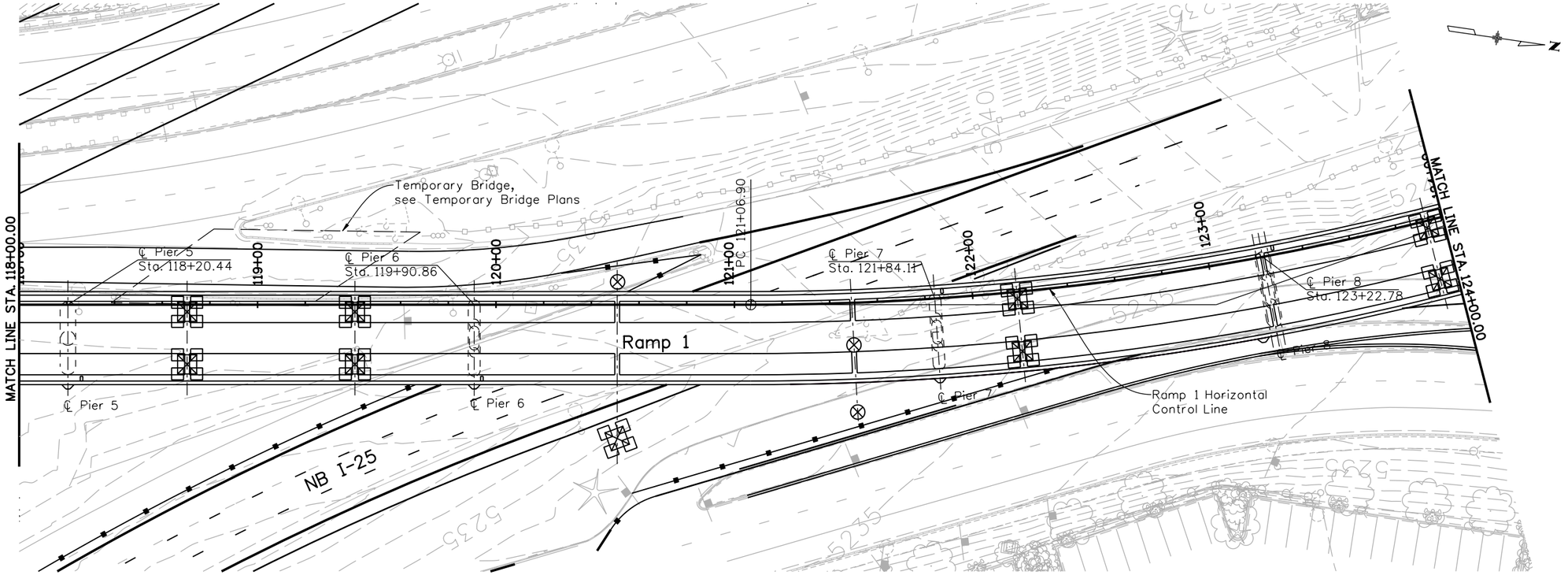

PLAN

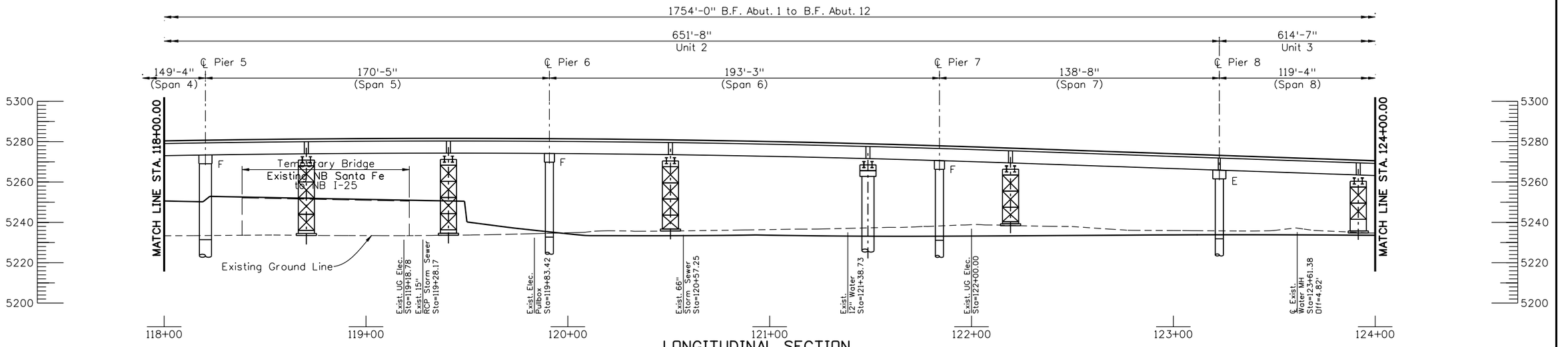

LONGITUDINAL SECTION
Taken at Ramp 1 HCL

Design	INITIAL	DATE
Designed By		
Checked By		

Detail	INITIAL	DATE
Detailed By	KJS	08/10
Checked By		

Quantities	INITIAL	DATE
Quantities By		
Checked By		

Revision Dates (Preliminary Stage Only)

soellner 1:49:32 PM K:\08276\16311\Phase 2\Bridge\Drawings\16311BRDG_PH2_F-16-XR_FalseworkCon02.dgn
9/27/2010 CDOT-PDFDraftQuality_XM.pltcfg *

Print Date: 9/27/2010
File Name: 16311BRDG_PH2_F-16-XR_FalseworkCon02.dgn
Horiz. Scale: 1:50 Vert. Scale: As Noted
Unit Information Unit Leader Initials

Summit Engineering Group, Incorporated
Consulting Structural Engineers
10822 Teller Drive Suite 330
Littleton, CO 80127

Sheet Revisions		
Date:	Comments	Init.

Colorado Department of Transportation
DOT DEPARTMENT OF TRANSPORTATION
2000 South Holly Street
Denver, CO 80222
Phone: 303-972-9112 FAX: 303-972-9114
Region 6 RLB

As Constructed
No Revisions:
Revised:
Void:

I-25/SANTA FE INTERCHANGE
RAMP 1 FLYOVER
FALSEWORK CONSTRAINTS (2 OF 3)

Designer:	G. Reese	Structure Numbers	F-16-XR
Detailer:	K. Soellner		
Sheet Subset:	Bridge	Subset Sheets:	B of XX

Project No./Code
IM 0254-394
16311
Sheet Number 161

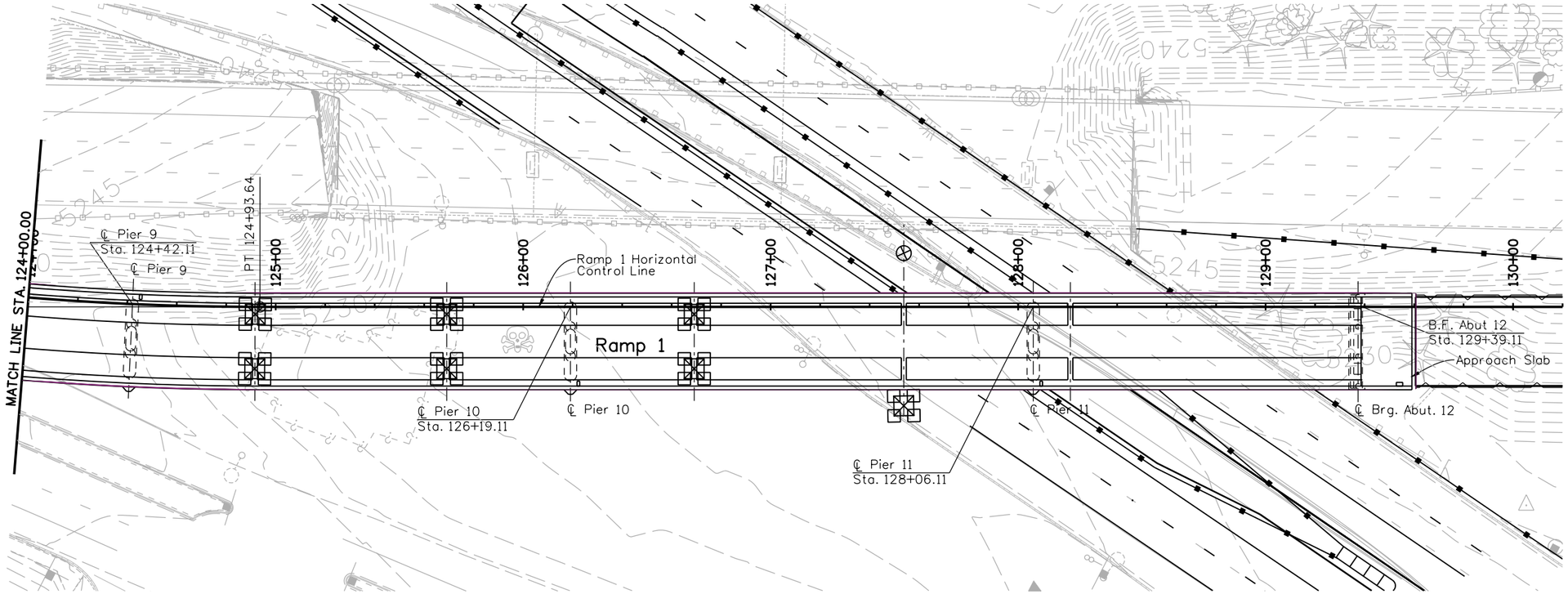

PLAN

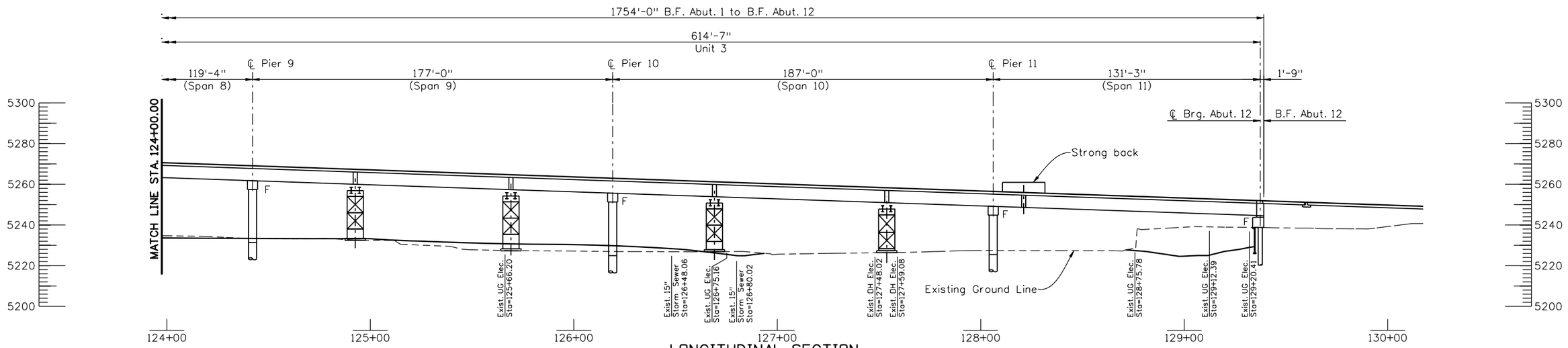

LONGITUDINAL SECTION
Taken at Ramp 1 HCL

Design			Detail			Quantities		
	INITIAL	DATE		INITIAL	DATE		INITIAL	DATE
Designed By			Detailed By	KJS	08/10	Quantities By		
Checked By			Checked By			Checked By		

Revision Dates (Preliminary Stage Only)

Print Date: 9/27/2010		Sheet Revisions		
File Name: 16311BRDG_PH2_F-16-XR_FalseworkCon03.dgn		Date:	Comments	Init.
Horiz. Scale: 1:50	Vert. Scale: As Noted			
Unit Information	Unit Leader Initials			

Summit Engineering Group, Incorporated — Consulting Structural Engineers
10822 Teller Drive Suite 330
Littleton, CO 80127

Colorado Department of Transportation
DEPARTMENT OF TRANSPORTATION
2000 South Holly Street
Denver, CO 80222
Phone: 303-972-9112 FAX: 303-972-9114
Region 6 RLB

As Constructed	
No Revisions:	
Revised:	
Void:	

I-25/SANTA FE INTERCHANGE
RAMP 1 FLYOVER
FALSEWORK CONSTRAINTS (3 OF 3)

Designer:	G. Reese	Structure Numbers	F-16-XR
Detailer:	K. Soellner		
Sheet Subset:	Bridge	Subset Sheets:	B of XX

Project No./Code	
IM 0254-394	
16311	
Sheet Number	162

soellner 1:49:38 PM K:\08276\16311\Phase 2\Bridge\Drawings\16311BRDG_PH2_F-16-XR_FalseworkCon03.dgn
9/27/2010 CDOT-PDFDraftQuality_XM.pltcfg *

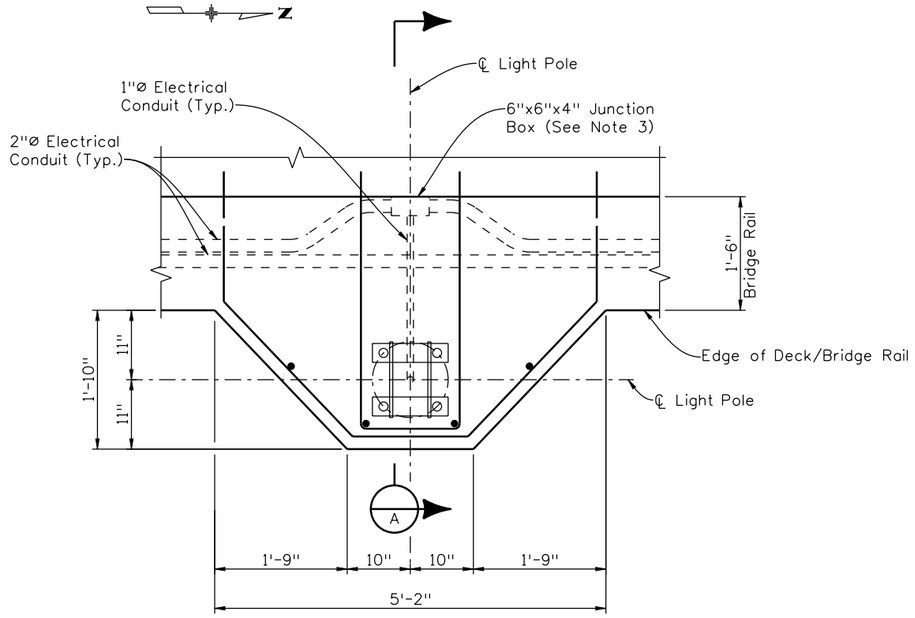

PARTIAL PLAN AT LIGHT POLE SUPPORT

(See Construction Layout for location) (10 Total)

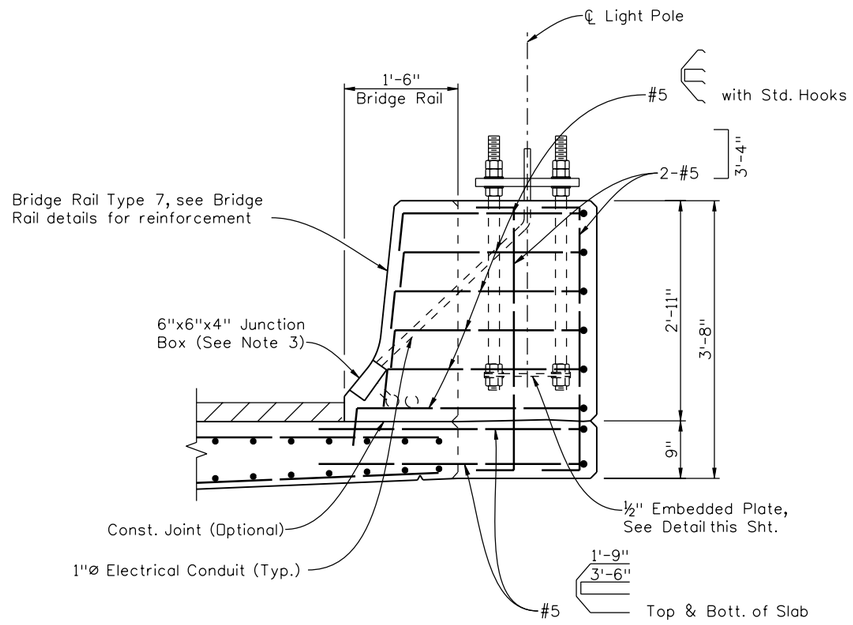

SECTION A

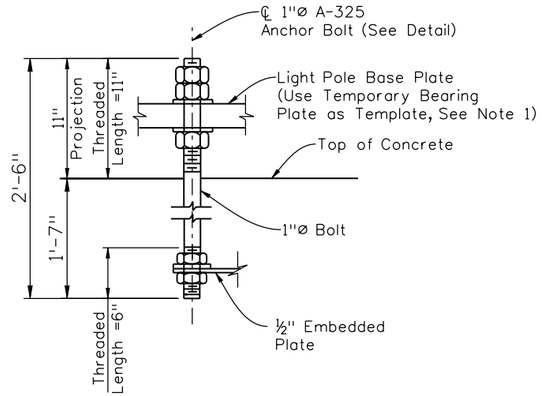

ANCHOR BOLT DETAIL

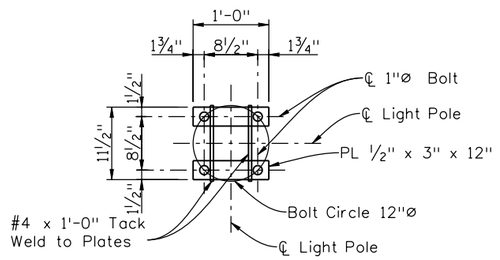

EMBEDDED PLATE DETAIL

(Galvanize after fabrication)

NOTES:

1. Contractor shall provide a bolt pattern template for installation of Anchor Bolts.
2. Contractor to verify Pole Bolt Circle with manufacturer.
3. Provide Junction Box with watertight cover in face of Bridge Rail at each Light Pole. Paint to match Concrete Stain. Junction Boxes will not be paid for separately, but shall be included in the cost of Item - 2 Inch Electrical Conduit.
4. The Light Pole Bases, including Concrete Class D, Reinforcing Steel and Anchor Bolts, will not be paid for separately, but shall be included in the cost of Item - Bridge Rail Type 7.

Revision Dates (Preliminary Stage Only)

Design					Detail				Quantities			
	INITIAL	DATE			INITIAL	DATE			INITIAL	DATE		
Designed By			Detailed By		KJS	08/10	Quantities By					
Checked By			Checked By				Checked By					

soellner 1:49:43 PM K:\08276\16311\Phase 2\Bridge\Drawings\16311BRDG_PH2_F-16-XR_LightDet.dgn
9/27/2010 CDOT-PDFDraftQuality_XM.pltcfg *

Print Date: 9/27/2010	Sheet Revisions	Colorado Department of Transportation	As Constructed
File Name: 16311BRDG_PH2_F-16-XR_LightDet.dgn	Date: Comments: Init.	2000 South Holly Street, Denver, CO 80222	No Revisions:
Horiz. Scale: 1:1 Vert. Scale: As Noted		Phone: 303-972-9112 FAX: 303-972-9114	Revised:
Unit Information Unit Leader Initials		Region 6 RLB	Void:

Summit Engineering Group, Incorporated — Consulting Structural Engineers
10822 Toller Drive Suite 330, Littleton, CO 80127

I-25/SANTA FE INTERCHANGE RAMP 1 FLYOVER LIGHT POLE SUPPORT DETAILS			Project No./Code
Designer: x	Structure Numbers	F-16-XR	IM 0254-394
Detailer: K. Soellner			16311
Sheet Subset: Bridge	Subset Sheets: of		Sheet Number 163

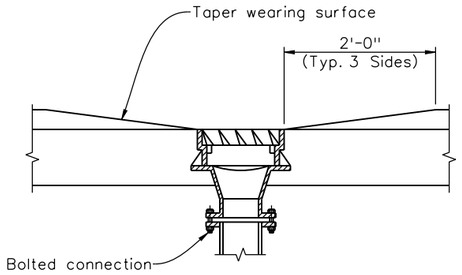

WEARING SURFACE AT BRIDGE DRAIN

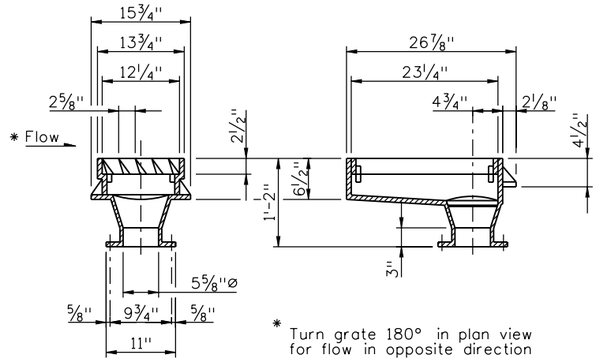

BRIDGE DRAIN INLET

Acceptable alternatives:
1. Cast iron Neenah Type R-3922-A
2. Structural steel assembly galvanized:
3. or approved equal

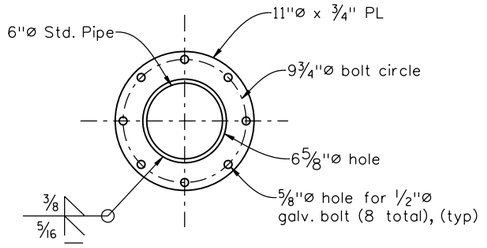

BOLTED FLANGE DETAIL

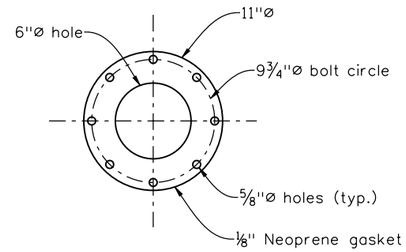

GASKET DETAIL

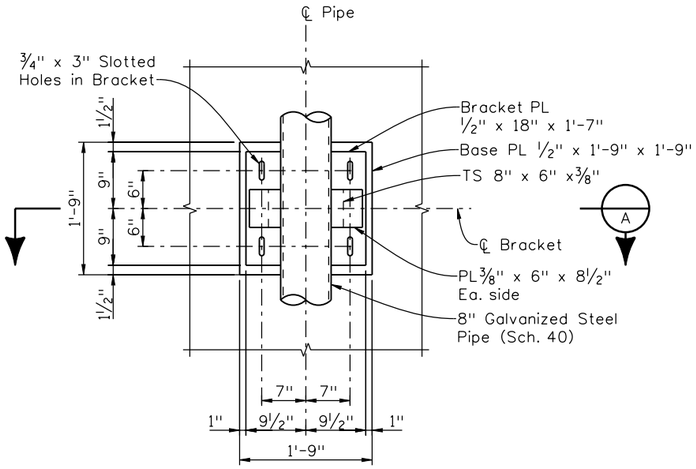

ELEVATION

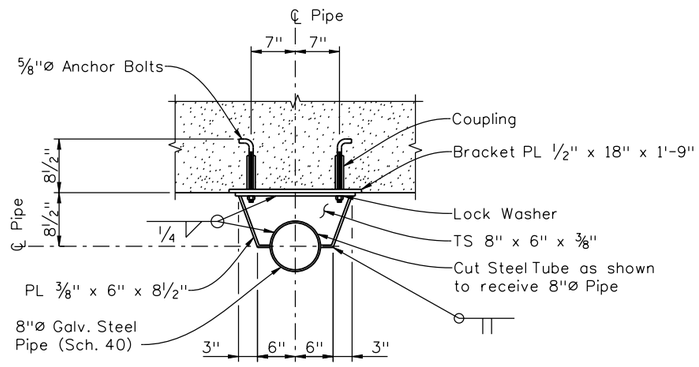

SECTION A

SUPPORT BRACKET

(Galvanized)

NOTES:

1. For location of Bridge Drains, see the Construction Layout.
2. Adjust slab reinforcing to clear bridge drains. Additional #6 bars shall be set between top and bottom slab bars. Bend bridge rail reinforcing to fit.
3. Cost of furnishing and installing 8"Ø pipe, splash blocks, support brackets, bridge drain inlets, connections, and other necessary drainage system incidentals, shall be included in Item No. 513, Bridge Drain (Special).
4. Bridge drains pipe assemblies shall be hot dipped galvanized after fabrication, see revision of Section 513.
5. Inlet assemblies shall be left bare ungalvanized if cast iron alloy, galvanized if welded from structural steel.
6. Inserts or drilling and grouting may be used for installation of the anchor bolts, as approved by the Engineer.

Revision Dates (Preliminary Stage Only)

Design	INITIAL	DATE	Detail	INITIAL	DATE	Quantities	INITIAL	DATE
Designed By	GAR	08/10	Detailed By	RAD	08/10	Quantities By		
Checked By			Checked By	GAR	10/10	Checked By		

soellner 1:49:46 PM K:\08276\16311\Phase 2\Bridge\Drawings\16311BRDG_PH2_F-16-XR_BridgeDrain01.dgn
9/27/2010 CDOT-PDFDraftQuality_XM.pltcfg *

Print Date: 9/27/2010
File Name: 16311BRDG_PH2_F-16-XR_BridgeDrain01.dgn
Horiz. Scale: 1:1 Vert. Scale: As Noted
Unit Information Unit Leader Initials

Summit Engineering Group, Incorporated
Consulting Structural Engineers
10822 Tolter Drive Suite 330
Littleton, CO 80127

Sheet Revisions		
Date:	Comments	Init.

Colorado Department of Transportation
DOT Department of Transportation
2000 South Holly Street
Denver, CO 80222
Phone: 303-972-9112 FAX: 303-972-9114
Region 6 RLB

As Constructed
No Revisions:
Revised:
Void:

I-25/SANTA FE INTERCHANGE
RAMP 1 FLYOVER
BRIDGE DRAIN DETAILS (1 OF 2)

Designer: x
Detailer: K. Soellner
Sheet Subset: Bridge
Structure Numbers: F-16-XR
Subset Sheets: Bxx of XX

Project No./Code: IM 0254-394
16311
Sheet Number 164

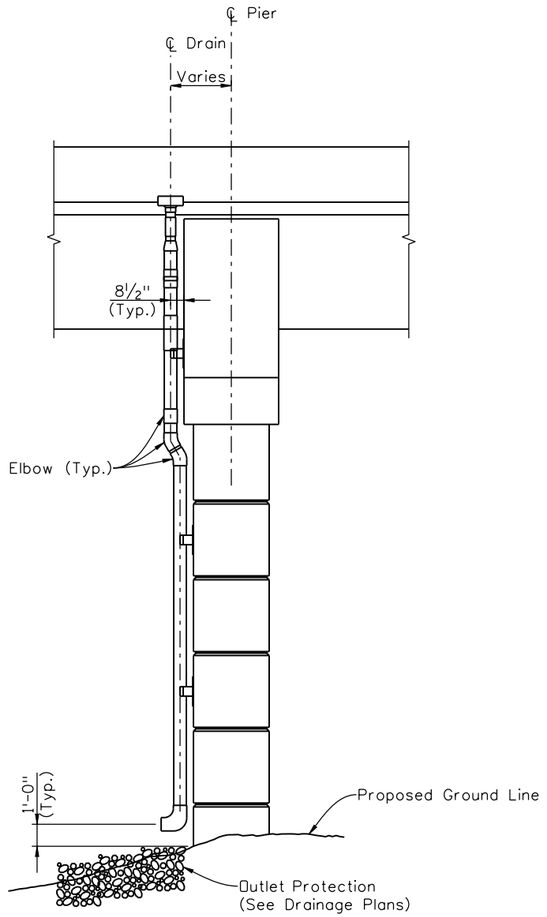

TYPICAL SIDE ELEVATION

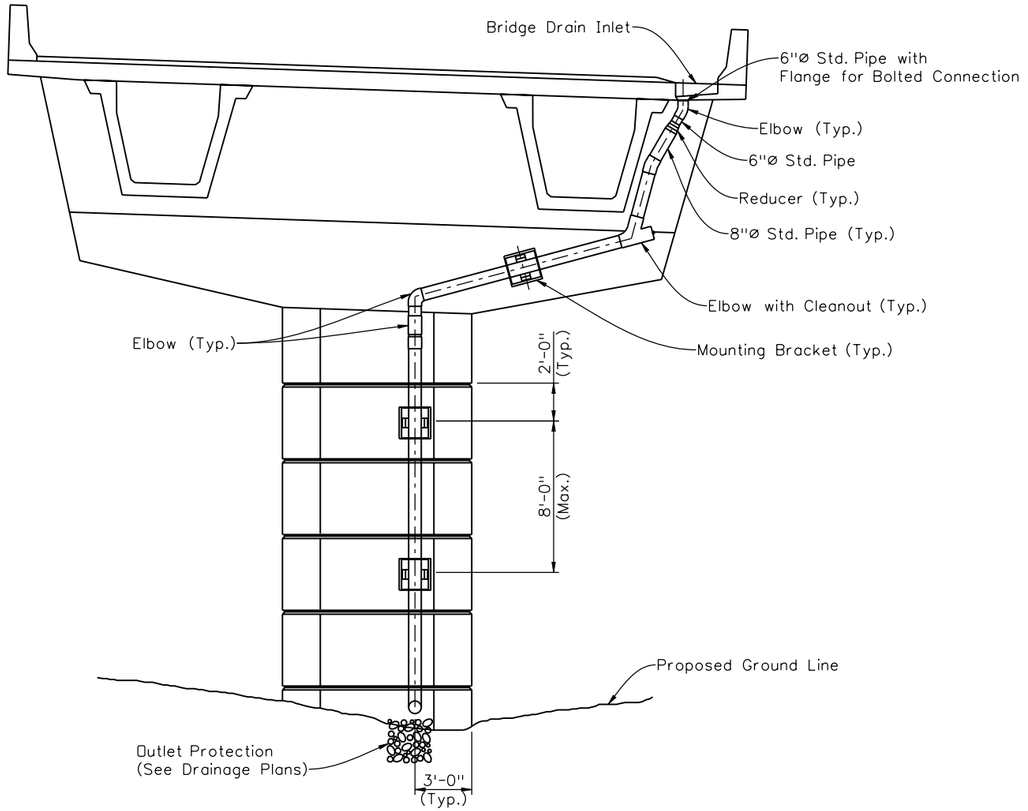

TYPICAL ELEVATION

(Note: Pier Height Varies)

(Preliminary Stage Only)

Revision Dates

Design			Detail			Quantities		
	INITIAL	DATE		INITIAL	DATE		INITIAL	DATE
Designed By	GAR	08/10	Detailed By	RAD	08/10	Quantities By		
Checked By			Checked By	GAR	10/10	Checked By		

soellner 1:49:50 PM K:\08276\16311\Phase 2\Bridge\Drawings\16311BRDG_PH2_F-16-XR_BridgeDrain02.dgn
9/27/2010 CDOT-PDFDraftQuality_XM.pltcfg *

Print Date: 9/27/2010
File Name: 16311BRDG_PH2_F-16-XR_BridgeDrain02.dgn
Horiz. Scale: 1:1 Vert. Scale: As Noted
Unit Information Unit Leader Initials

Summit Engineering Group, Incorporated
CONSULTING STRUCTURAL ENGINEERS
10822 Teller Drive Suite 330
Littleton, CO 80127

Sheet Revisions

Date:	Comments	Init.

Colorado Department of Transportation
DEPARTMENT OF TRANSPORTATION
2000 South Holly Street
Denver, CO 80222
Phone: 303-972-9112 FAX: 303-972-9114
Region 6 RLB

As Constructed
No Revisions:
Revised:
Void:

I-25/SANTA FE INTERCHANGE
RAMP 1 FLYOVER
BRIDGE DRAIN DETAILS (2 OF 2)

Designer: x
Detailer: K. Soellner
Sheet Subset: Bridge
Structure Numbers: F-16-XR
Subset Sheets: Bxx of XX

Project No./Code
IM 0254-394
16311
Sheet Number 165

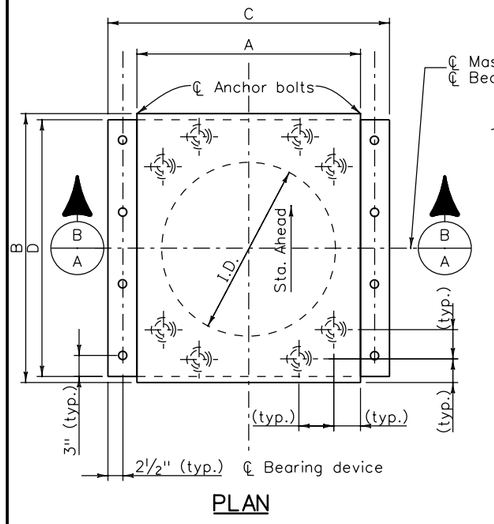

PLAN

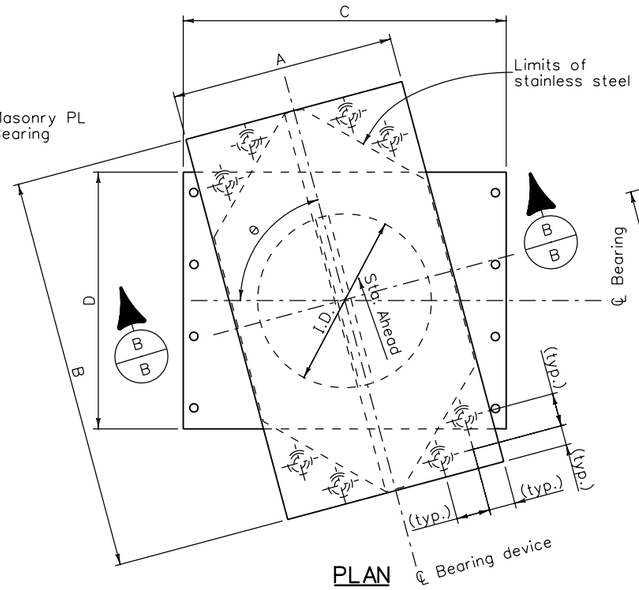

PLAN

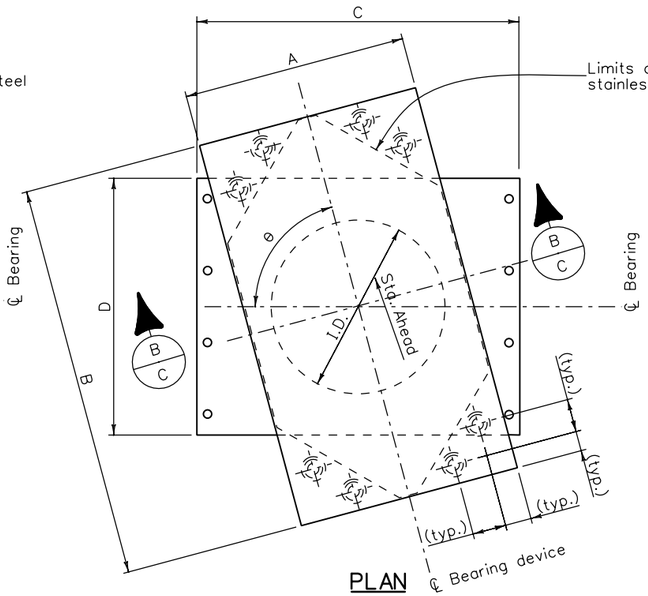

PLAN

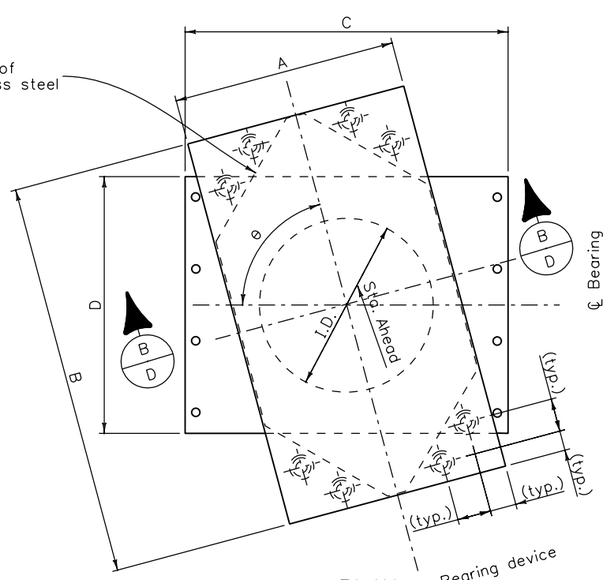

PLAN

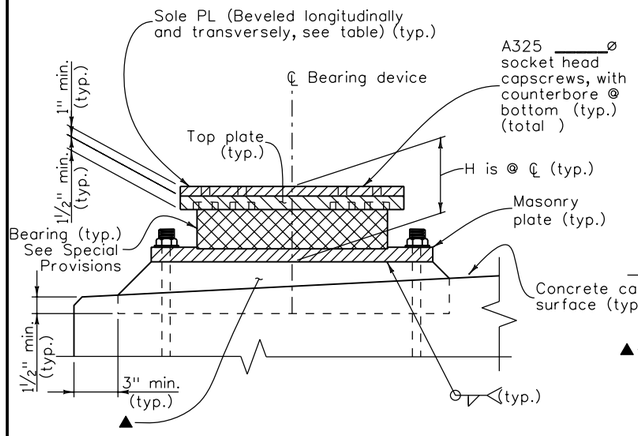

SECTION (B/A)

FIXED BEARING

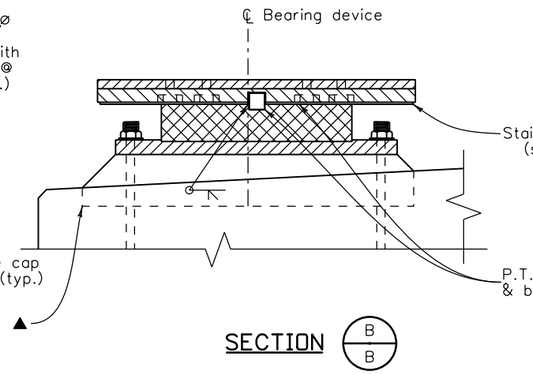

SECTION (B/B)

CENTER GUIDED EXPANSION BEARING

(See Fixed Brg. for typ. dimensions)

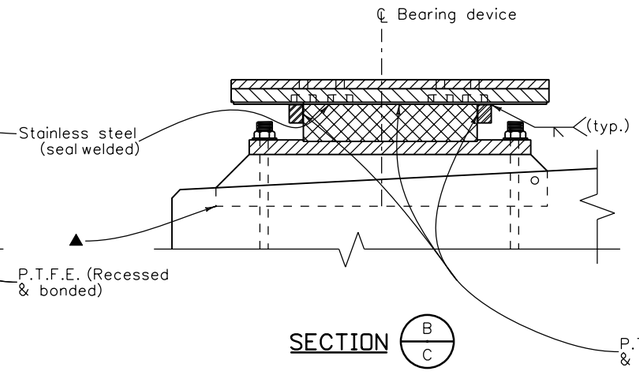

SECTION (B/C)

SIDE BAR GUIDED EXPANSION BEARING

(See Fixed Brg. for typ. dimensions)

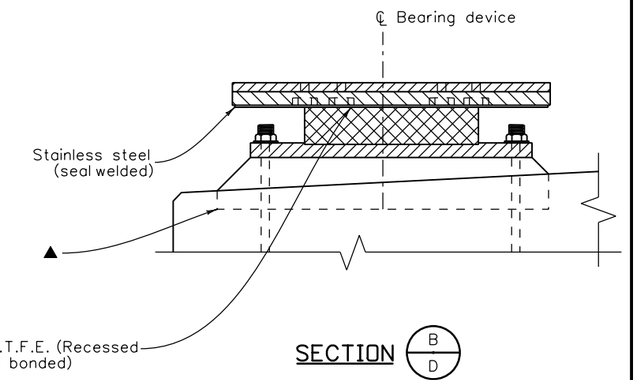

SECTION (B/D)

NON-GUIDED EXPANSION BEARING

(See Fixed Brg. for typ. dimensions)

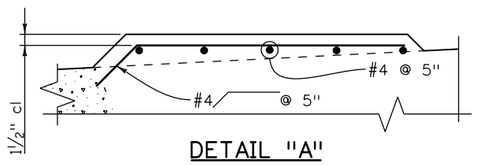

DETAIL "A"

▲ Use non-shrink approved grout in formed cavity or see Detail "A" for alternate built-up monlithic cap seat.

Revision Dates (Preliminary Stage Only)

Quantities	INITIAL	DATE
Detail	INITIAL	DATE
Design	INITIAL	DATE
Designed By	GAR	08/10
Detailed By	RAD	08/10
Quantities By		
Checked By	GAR	10/10
Checked By		

soellner 1:49:53 PM K:\08276\16311\Phase 2\Bridge\Drawings\16311BRDG_PH2_F-16-XR_Bearing01.dgn
9/27/2010 CDOT-PDFDraftQuality_XM.pltcfg *

Print Date: 9/27/2010
File Name: 16311BRDG_PH2_F-16-XR_Bearing01.dgn
Horiz. Scale: 1:1 Vert. Scale: As Noted
Unit Information Unit Leader Initials

Summit Engineering Group, Incorporated Consulting Structural Engineers
10822 Teller Drive Suite 330
Littleton, CO 80127

Sheet Revisions

Date:	Comments	Init.

Colorado Department of Transportation
DOT DEPARTMENT OF TRANSPORTATION
2000 South Holly Street
Denver, CO 80222
Phone: 303-972-9112 FAX: 303-972-9114
Region 6 RLB

As Constructed
No Revisions:
Revised:
Void:

I-25/SANTA FE INTERCHANGE
RAMP 1 FLYOVER
BEARING DEVICE (TYPE III)

Designer:	G. Reese	Structure Numbers	F-16-XR
Detailer:	R. Dillon		
Sheet Subset:	Bridge	Subset Sheets:	Bxx of XX

Project No./Code
IM 0254-394
16311
Sheet Number 166

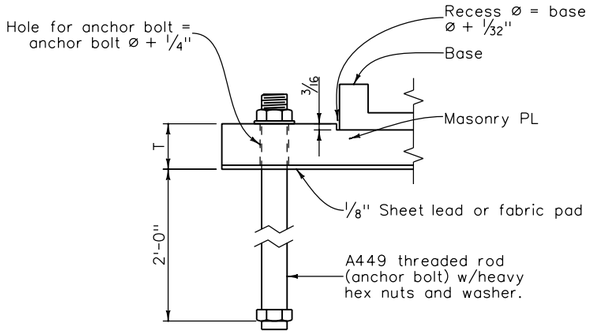

ANCHOR BOLT DETAIL

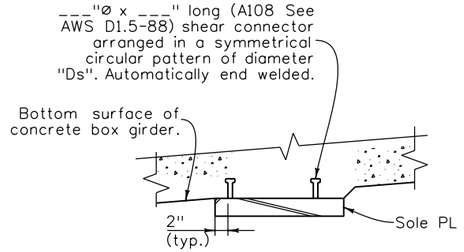

SOLE PLATE TO GIRDER CONNECTION

NOTES:

All structure steel for the bearing devices, including sole plates, top plates, and masonry plates, shall be AASHTO M270 (ASTM A709) Grade ____ unless otherwise shown. A588 or A572 may be substituted for Grade 36 at no additional cost to the project.

Bearing seat elevations at abutments and piers shall be checked and adjusted according to the final dimensions of bearing assemblies adopted.

Longitudinal structure movement due to temperature and shrinkage is based on a mid-range temperature of 40°F. If site temperature is not 40°, a longitudinal offset of top elements of the bearing (above sliding surface) shall be made in the field based on the 10° temperature increment in the table. In addition, longitudinal one way structure movement due to prestress shortening and creep shall be accommodated for all temperature ranges with the initial offset in the table away from the fixed bearing.

Anchor bolts may be set in wet concrete of bearing seat, or placed within a formed cylindrical void 4" in diameter and then grouted with high strength epoxy grout.

The internal surfaces of the pot cavity and the bottom surface of the piston shall be polished after zinc metalizing.

Fx = Fixed bearing
Gd = Guided expansion bearing
Exp = Non-guided (free floating) expansion bearing
PTFE = Polytetrafluoroethylene

Location	Quant.	Fx. Gd. Exp.	Vertical Load Per Brg. (kips)		Horiz. Load Per Brg. (kips)				Longit. Range of Structure Movement	Rotation (Radians)	Top Plate (Sole Plate similar)		Bearing	Masonry Plate (inches)			Top Connections						A449 Zinc Plated Anchor Bolts		Total Height	X-Slope ⅛ ± Looking Ah. Sta.	Grade ⅛ ± Ah. sta.	Guide Angle Θ	10° Temp. Incr.	Initial Offset
					Service		Strength										Field Plug Welds (Steel Str.)			Concrete Anchor Studs									
			Service	Strength	Transv.	Longit	Transv.	Longit	(in.)		A	B	ID	C	D	T	No.	ø(In.)	tw	No.	Ds	ø(In.)	No.	Size	H					(In.)
Abut. 1																														

ACCEPTABLE ALTERNATES

D. S. Brown Company
North Baltimore, Ohio

Cosmec, Inc.
Walpole, MA

Con-Serv, Inc.
Georgetown, SC

R. J. Watson, Inc.
Amherst, NY
(Disk Bearing Alternate)

Designer/Detailer:
Add 2" to the Theoretical value for dimension B in guided and non-guided bearings and add 2" to the theoretical value for dimension A in non-guided bearings to provide a design and construction tolerance.

Designer shall specify grade of steel required

Revision Dates (Preliminary Stage Only)

Design	INITIAL	DATE	Detail	INITIAL	DATE	Quantities	INITIAL	DATE
Designed By	GAR	08/10	Detailed By	RAD	08/10	Quantities By		
Checked By			Checked By	GAR	10/10	Checked By		

soeliner 1:49:56 PM K:\08276\16311\Phase 2\Bridge\Drawings\16311BRDG_PH2_F-16-XR_Bearing02.dgn
9/27/2010 CDOT-PDFDraftQuality_XM.pltcfg *

Print Date: 9/27/2010
File Name: 16311BRDG_PH2_F-16-XR_Bearing02.dgn
Horiz. Scale: 1:1 Vert. Scale: As Noted
Unit Information Unit Leader Initials

Summit Engineering Group, Incorporated
CONSULTING STRUCTURAL ENGINEERS
10822 Teller Drive Suite 330
Littleton, CO 80127

Sheet Revisions

Date:	Comments	Init.

Colorado Department of Transportation
DOT DEPARTMENT OF TRANSPORTATION
2000 South Holly Street
Denver, CO 80222
Phone: 303-972-9112 FAX: 303-972-9114
Region 6 RLB

As Constructed
No Revisions:
Revised:
Void:

I-25/SANTA FE INTERCHANGE
RAMP 1 FLYOVER
BEARING DEVICE (TYPE III)

Designer: G. Reese
Detailer: R. Dillon
Sheet Subset: Bridge
Structure Numbers: F-16-XR
Subset Sheets: Bxx of XX

Project No./Code
IM 0254-394
16311
Sheet Number 167

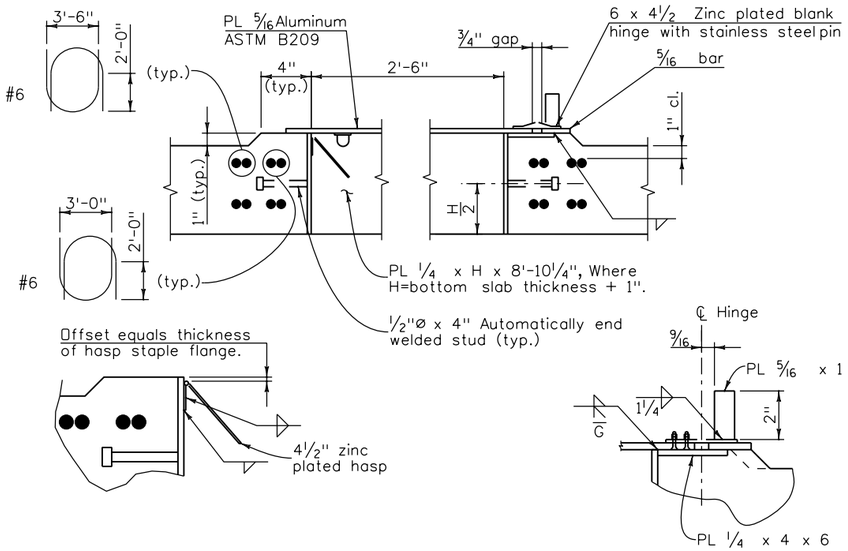

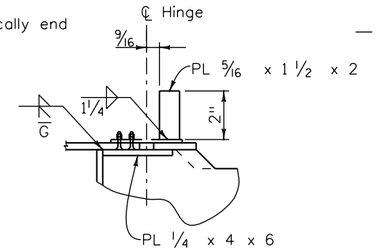

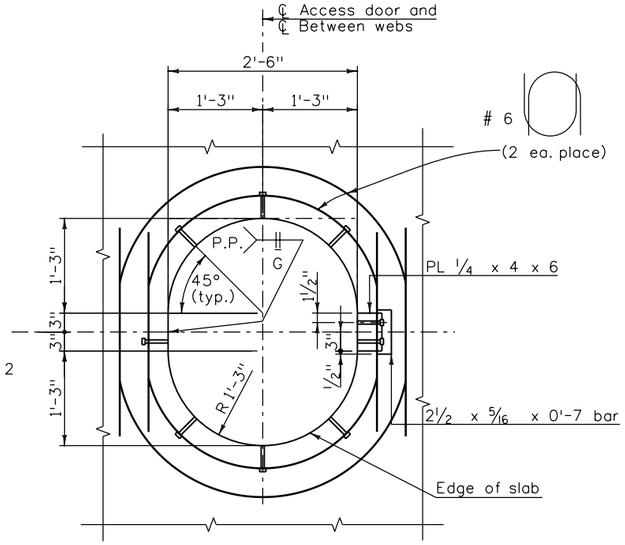

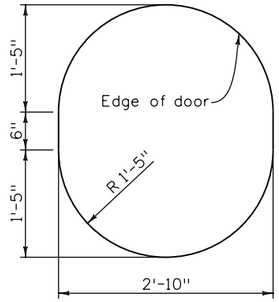

NOTES:

See abutment details and superstructure details for dimensions and reinforcing not shown.

Grind galvanizing from frame, where the hasp or hinge attaches, prior to welding. After welding, paint the weld and surrounding areas with zinc rich paint meeting Military Specifications DOD-P-21035A.

Attach door with 4-1/4"Ø zinc plated bolts with countersunk heads. Use double nuts; burr threads after thghtening. Attach hasp staple in a similar manner. Leave door in the open position while pouring the bottom slab.

Paint door with zinc rich paint, meeting the above specification after welding.

ACCESS DOOR DETAILS

Door, galv. frame, and hardware to be paid for in Item No. 601 - Concrete Class D.

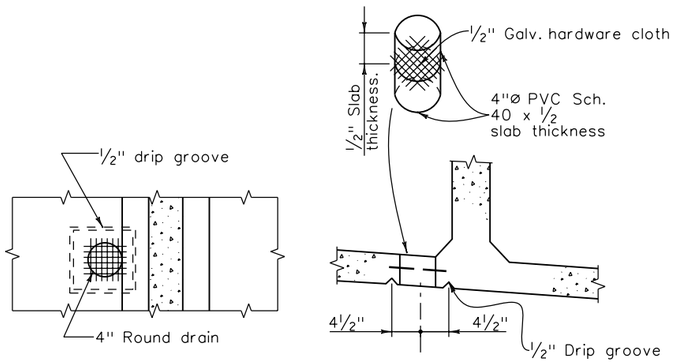

PLAN ELEVATION

BOTTOM SLAB DRAIN DETAIL

Locate at low point of each cell.

Design	INITIAL	DATE
Designed By	XXX	MM/YY
Checked By	XXX	MM/YY

Detail	INITIAL	DATE
Detailed By	XXX	MM/YY
Checked By	XXX	MM/YY

Quantities	INITIAL	DATE
Quantities By	XXX	MM/YY
Checked By	XXX	MM/YY

Revision Dates	MM/YY
(Preliminary Stage Only)	

Print Date: 9/27/2010
File Name: 16311BRDG_PH2_F-16-XR_AccessDoor.dgn
Horiz. Scale: 1:1 Vert. Scale: As Noted
Unit Information Unit Leader Initials

Summit Engineering Group, Incorporated
CONSULTING STRUCTURAL ENGINEERS
10822 Teller Drive Suite 330
Littleton, CO 80127

Sheet Revisions		
Date:	Comments	Init.

Colorado Department of Transportation
4201 East Arkansas Avenue
Room 307
Denver, CO 80222-3406
Phone: 303-757-9152 FAX: 303-757-9747
Region 6 Bridge Branch

As Constructed	
No Revisions:	
Revised:	
Void:	

I-25/SANTA FE INTERCHANGE
RAMP 1 FLYOVER
ACCESS DOOR DETAILS

Designer:	X	Structure Numbers	F-16-XR
Detailer:	K. Soellner		
Sheet Subset:	Bridge	Subset Sheets:	XXX of XX

Project No./Code	
IM 0254-394	
16311	
Sheet Number	168

soellner 1:50:00 PM K:\08276\16311\Phase 2\Bridge\Drawings\16311BRDG_PH2_F-16-XR_AccessDoor.dgn
9/27/2010 CDOT-PDFDraftQuality_XM.pltcfg *

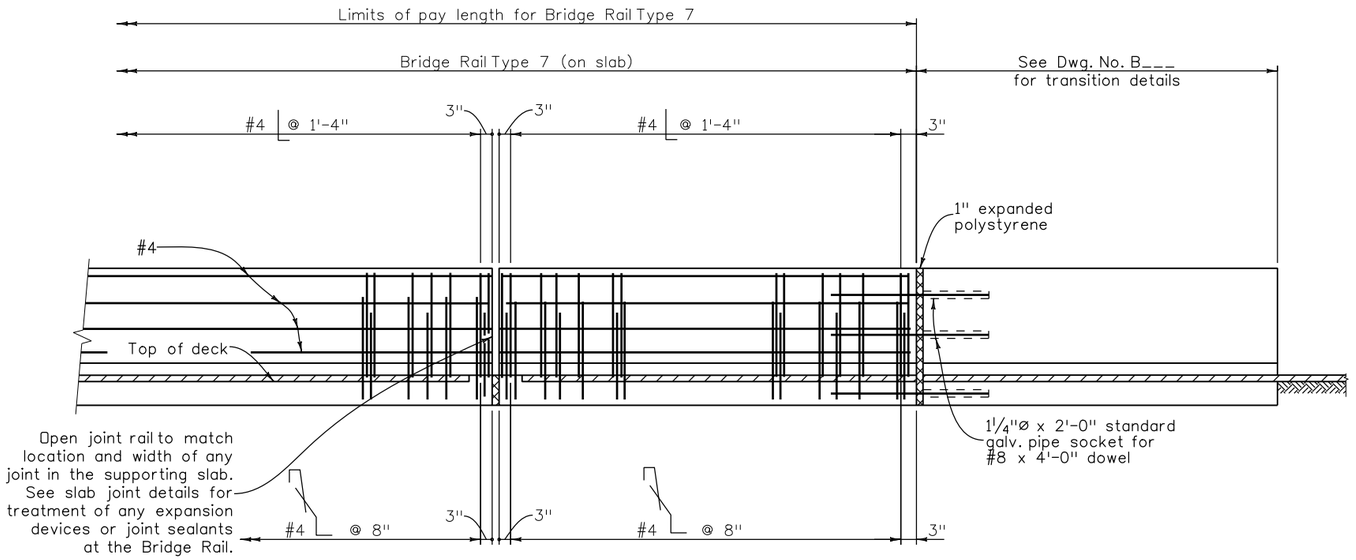

ELEVATION

TRANSITION TO CONNECT
BRIDGE RAIL TYPE 7
TO GUARD RAIL

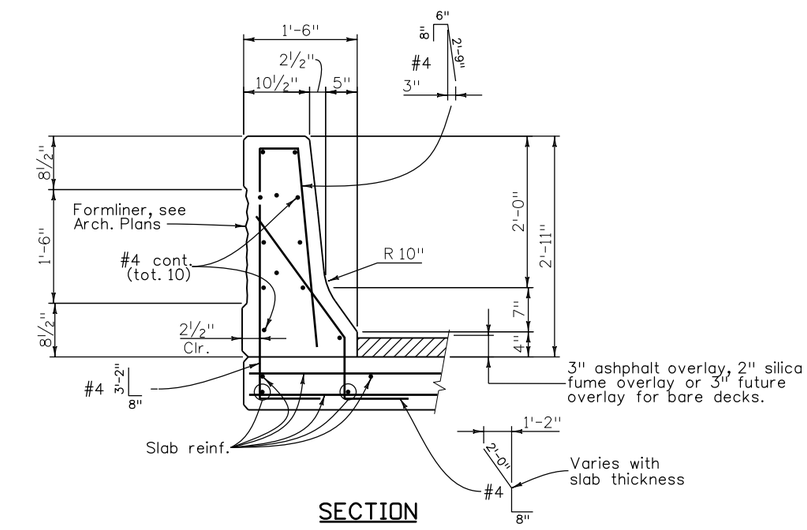

SECTION

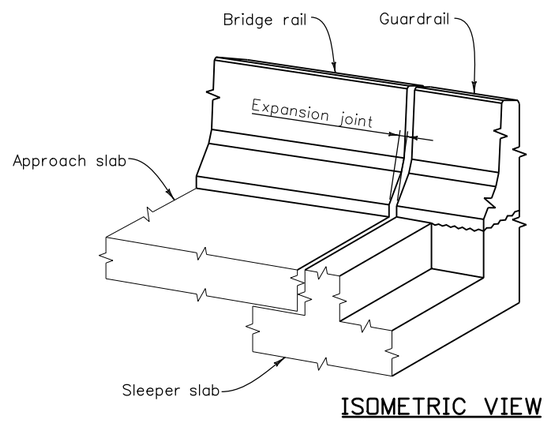

ISOMETRIC VIEW

#8 dowels between
bridge rail and guardrail
are not required when
the guardrail is placed
on the sleeper slab.

NOTES:

Backfill wingwalls and retaining walls before barrier is placed.

All bridge rail concrete shall be Class D.

Longitudinal reinforcement shall stop at all expansion joints.

Bridge rail shall be constructed plumb.

See Std. M-606-1 and M-606-13 for Guard Rail Type 3 details and details of transition.

Concrete and reinforcing steel shall conform to the requirements of Sections 601 and 602. Payment will be made under Item 606, Bridge Rail Type 7.

The surface of the rail shall be tested with a 10 foot straightedge laid along the surface in the longitudinal direction. Deviation of the concrete surface from the straightedge shall be less than ¼" plus allowance for roadway horizontal and vertical curvature, if any.

DESIGN DATA

Reinforced Concrete:

Class D Concrete: f'_c = 4,500 psi
Reinforcing Steel: f_y = 60,000 psi

INFORMATION ONLY

Description	Unit	Per Lin. Ft.
Concrete Class D	Cu. Yd.	0.12
Reinforcing Steel (Epoxy)	Lb.	16.2

Revision Dates (Preliminary Stage Only)

Design	INITIAL	DATE	Detail	INITIAL	DATE	Quantities	INITIAL	DATE
Designed By	GAR	08/10	Detailed By	RAD	08/10	Quantities By		
Checked By			Checked By	GAR	10/10	Checked By		

Patrick 3:39:31 PM K:\08276\16311\Phase 2\Bridge\Drawings\16311BRDG_PH2_F-16-XR_BridgeRailType7.dgn
9/27/2010 CDOT-DefaultPrinter_XM.pltcfg CDOT-PenTable.tbl

Print Date: 9/27/2010
File Name: 16311BRDG_PH2_F-16-XR_BridgeRailType7.dgn
Horiz. Scale: 1:1 Vert. Scale: As Noted
Unit Information Unit Leader Initials

Summit Engineering Group, Incorporated
Consulting Structural Engineers
10822 Toller Drive Suite 330
Littleton, CO 80127

Sheet Revisions

Date:	Comments	Init.

Colorado Department of Transportation
DOT Department of Transportation
2000 South Holly Street
Denver, CO 80222
Phone: 303-972-9112 FAX: 303-972-9114
Region 6 RLB

As Constructed
No Revisions:
Revised:
Void:

I-25/SANTA FE INTERCHANGE
RAMP 1 FLYOVER
BRIDGE RAIL TYPE 7

Designer:	G. Reese	Structure Numbers	F-16-XR
Detailer:	R. Dillon		
Sheet Subset:	Bridge	Subset Sheets:	Bxx of XX

Project No./Code
IM 0254-394
16311
Sheet Number 169

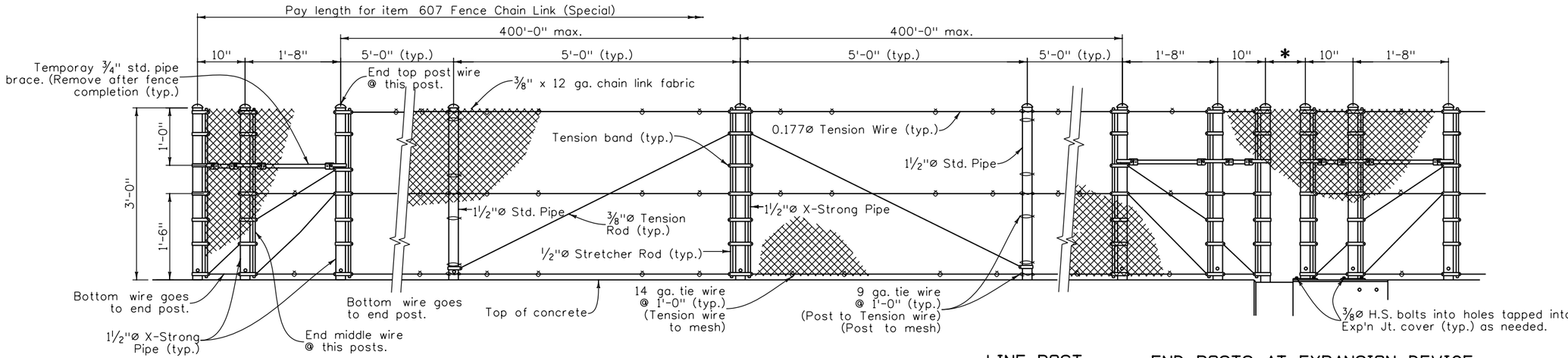

END POSTS LINE POST BRACE POST (spa. @ 400' max.)

LINE POST END POSTS AT EXPANSION DEVICE

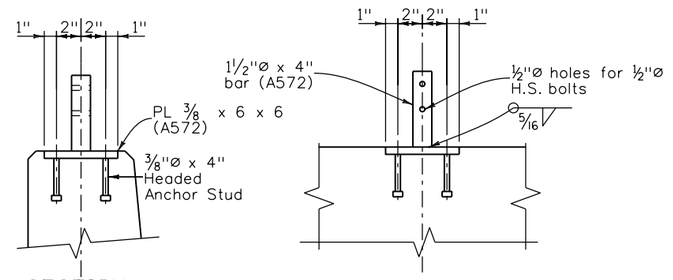

SECTION ELEVATION

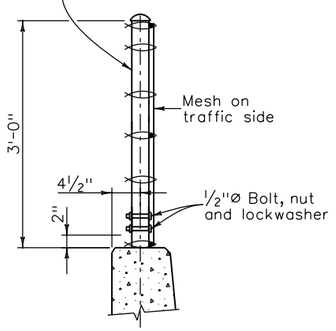

TYPICAL SECTION

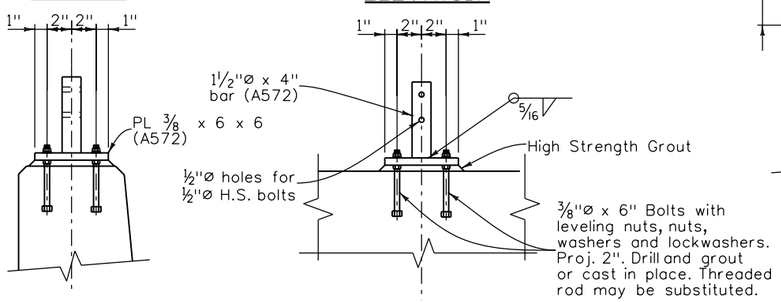

SECTION ELEVATION

ALTERNATE ANCHORAGE DETAILS

* For Steel Bridges:
Use ½ of rated joint motion +6", 8" min. If not known, rated motion may be assumed to be 1¼" per 100' contributing to motion.

* For Concrete Bridges:
Use ¼ of rated joint motion +6", 8" min. If not known, rated motion may be assumed to be 1¼" per 100' contributing to motion.

If * exceeds 10" run mesh over gap with enough slack for ½ rated expansion motion.

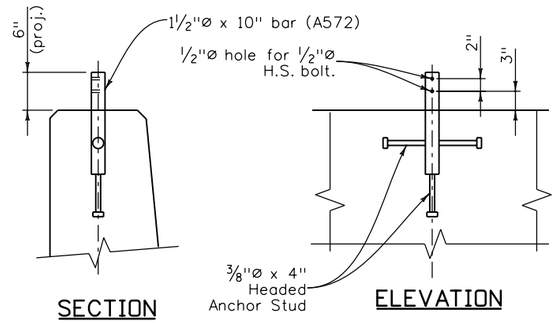

SECTION ELEVATION

ANCHORAGE DETAIL

NOTES

Anchorage assembly shall be galvanized after fabrication. If Vinyl Coating is specified, the fence assembly shall be Galvanized and Vinyl Coated after fabrication. Anchorages shall only be galvanized after fabrication.

Tension Rods and Wires shall have turnbuckles.

Post shall be vertical.

Pipe shall conform to ASTM A53 Type E or S, Grade B.

DESIGN DATA

Test Tension = 5400 lbs
Test with: Max Midbay deflection = 1¼" for Lateral Load of 160 lbs. on 1 ft². 1'-6" up @ center of bay.

Live Load: wind load = 32 psf
or snow impact load = 96 plf @ 1'-6" up

Structural Steel: Pipe f_y = 35,000 psi
ASTM A572 (GR 50) f_y = 50,000 psi

Standard Color Vinyl Coatings over Galvanized Wire	Munsell Color System No. (as per ASTM)
Galvanized Only	None
Brown	7YR 2.4/1.75
Green	8.8G 2.63/5.8
☒ Black	1.8PB 1.26/0.5

Special Color Vinyl Coatings over Galvanized Wire	☐Federal Color No. ☐Munsell Color System No.

If the specific color of coating is not marked and the Federal Color No. or the Munsell Color System No. is not given, vinyl coating is not required.

Revision Dates (Preliminary Stage Only)

Design	INITIAL	DATE	Detail	INITIAL	DATE	Quantities	INITIAL	DATE
Designed By	GAR	08/10	Detailed By	RAD	08/10	Quantities By	GAR	10/10
Checked By			Checked By			Checked By		

soellner 1:50:07 PM K:\08276\16311\Phase 2\Bridge\Drawings\16311BRDG_PH2_F-16-XR_ChainLinkFence.dgn
9/27/2010 CDOT-PDFDraftQuality_XM.pltcfg *

Print Date: 9/27/2010
File Name: 16311BRDG_PH2_F-16-XR_ChainLinkFence.dgn
Horiz. Scale: 1:1 Vert. Scale: As Noted
Unit Information Unit Leader Initials

Summit Engineering Group, Incorporated — Consulting Structural Engineers
10822 Teller Drive Suite 330
Littleton, CO 80127

Sheet Revisions		
Date:	Comments	Init.

Colorado Department of Transportation
DEPARTMENT OF TRANSPORTATION
2000 South Holly Street
Denver, CO 80222
Phone: 303-972-9112 FAX: 303-972-9114
Region 6 RLB

As Constructed
No Revisions:
Revised:
Void:

I-25/SANTA FE INTERCHANGE
RAMP 1 FLYOVER
FENCE CHAIN LINK (SPECIAL)

Designer:	G. Reese	Structure Numbers	F-16-XR
Detailer:	R. Dillon		
Sheet Subset:	Bridge	Subset Sheets:	Bxx of XX

Project No./Code
IM 0254-394
16311
Sheet Number 170

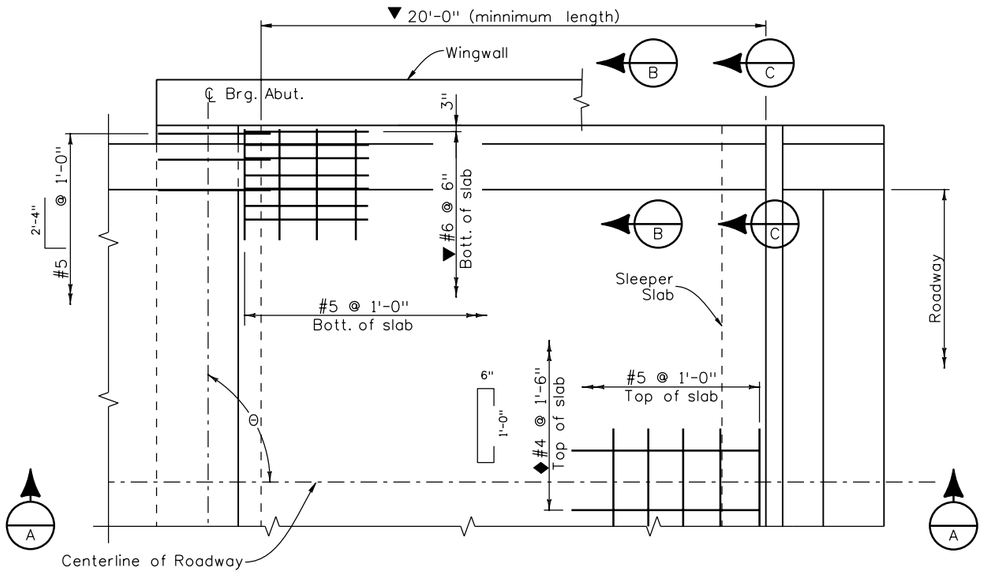

PLAN

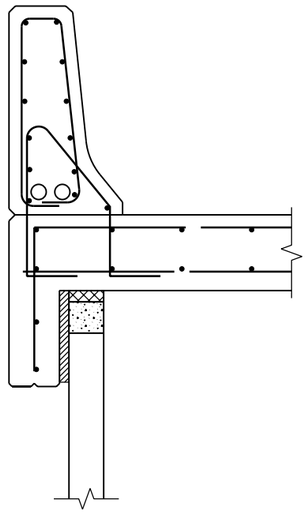

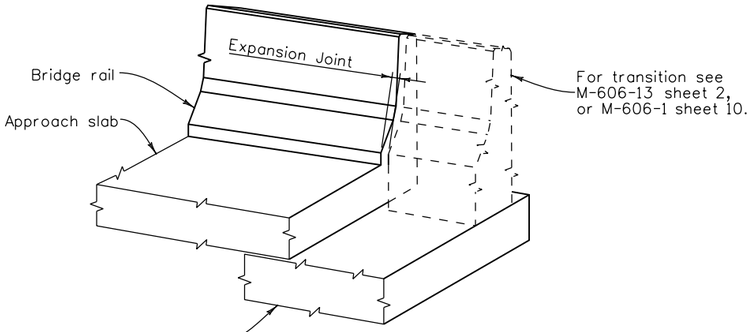

ISOMETRIC VIEW TYPE 7 RAIL

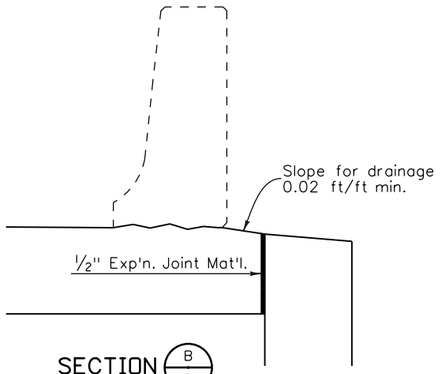

SECTION B/B

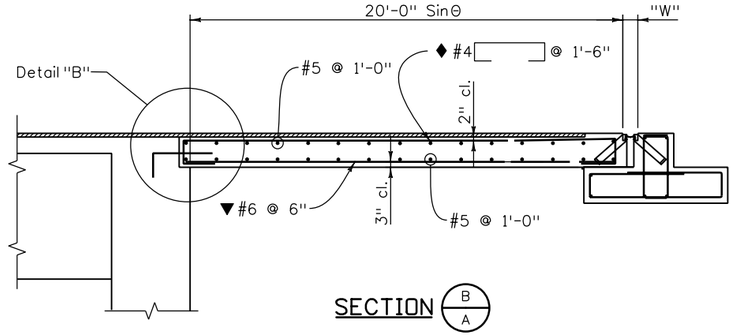

SECTION B/A

With Hot Bituminous Pavement roadway

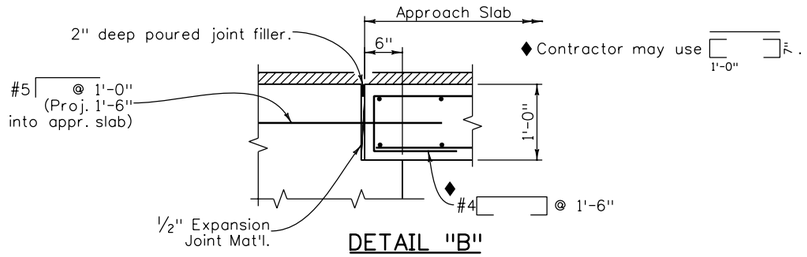

DETAIL "B"

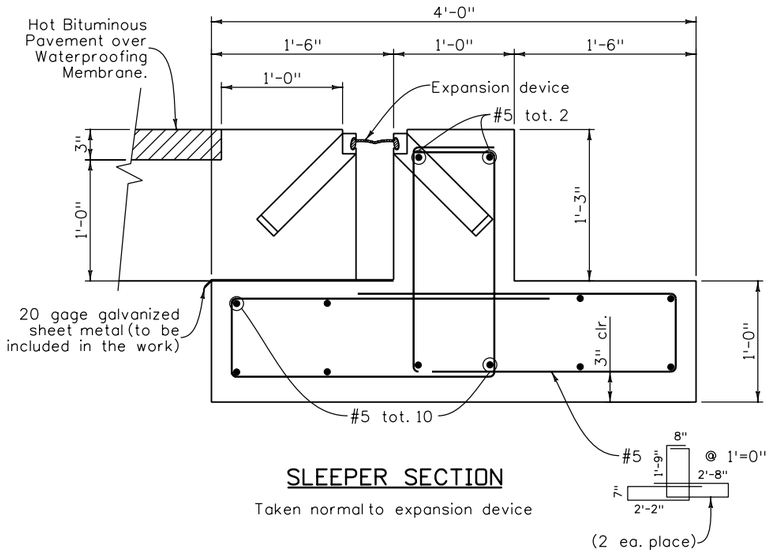

SLEEPER SECTION

Taken normal to expansion device

NOTES:

Concrete Class D (Bridge) shall be used for approach slabs.

½" expansion joint material shall meet AASHTO Spec. M213.

For expansion device details see Dwg. No. B___.

For curb and rail details see Dwg. No. B___.

Approach slab concrete shall be cured in accorcance with the Specifications for Bridge Deck Concrete in Subsection 601.

The top surface of the post-tensioning block, if any, shall be covered with 1" of low density polystyrene foam. See Dwg. No. B___.

Quantities	INITIAL	DATE
Quantities By		
Checked By		

Detail	INITIAL	DATE
Detailed By	RAD	08/10
Checked By	GAR	10/10

Design	INITIAL	DATE
Designed By	GAR	08/10
Checked By		

Revision Dates (Preliminary Stage Only)

soelner 1:50:11 PM K:\08276\16311\Phase 2\Bridge\Drawings\16311BRDG_PH2_F-16-XR_Apr01.dgn
9/27/2010 CDOT-PDFDraftQuality_XM.pltcfg

Print Date: 9/27/2010
File Name: 16311BRDG_PH2_F-16-XR_Apr01.dgn
Horiz. Scale: 1:1 Vert. Scale: As Noted
Unit Information Unit Leader Initials

Summit Engineering Group, Incorporated
CONSULTING STRUCTURAL ENGINEERS
10822 Teller Drive Suite 330
Littleton, CO 80127

Sheet Revisions

Date:	Comments	Init.

Colorado Department of Transportation
DEPARTMENT OF TRANSPORTATION
2000 South Holly Street
Denver, CO 80222
Phone: 303-972-9112 FAX: 303-972-9114
Region 6 RLB

As Constructed
No Revisions:
Revised:
Void:

I-25/SANTA FE INTERCHANGE
RAMP 1 FLYOVER
APPROACH SLAB DETAILS

Designer:	G. Reese	Structure Numbers	F-16-XR
Detailer:	R. Dillon		
Sheet Subset:	Bridge	Subset Sheets:	Bxx of XX

Project No./Code
IM 0254-394
16311
Sheet Number 171

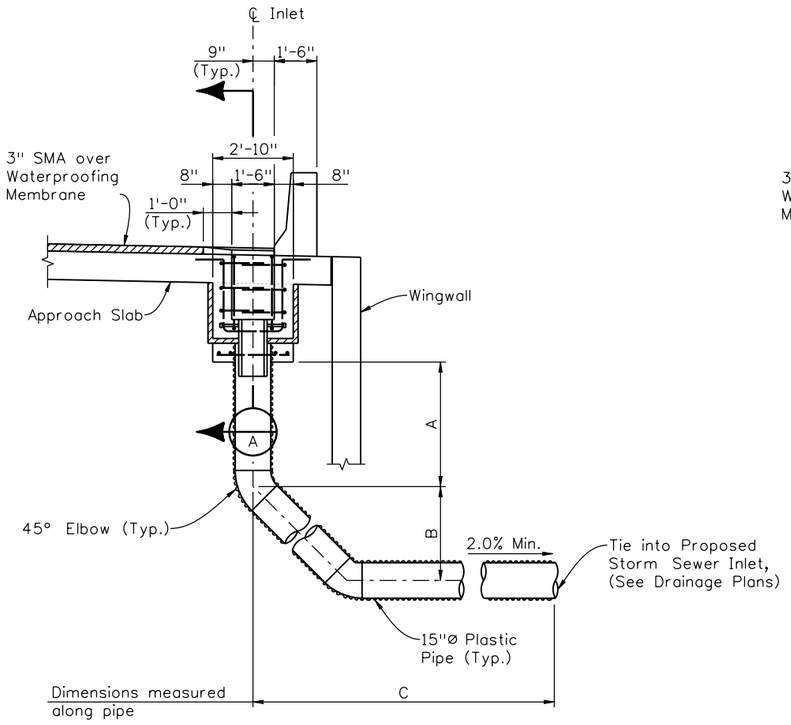

TYPICAL SECTION NEAR SOUTH APPROACH SLAB

(Looking North) (Dimensions measured perpendicular to Ramp 1 HCL except as noted otherwise)

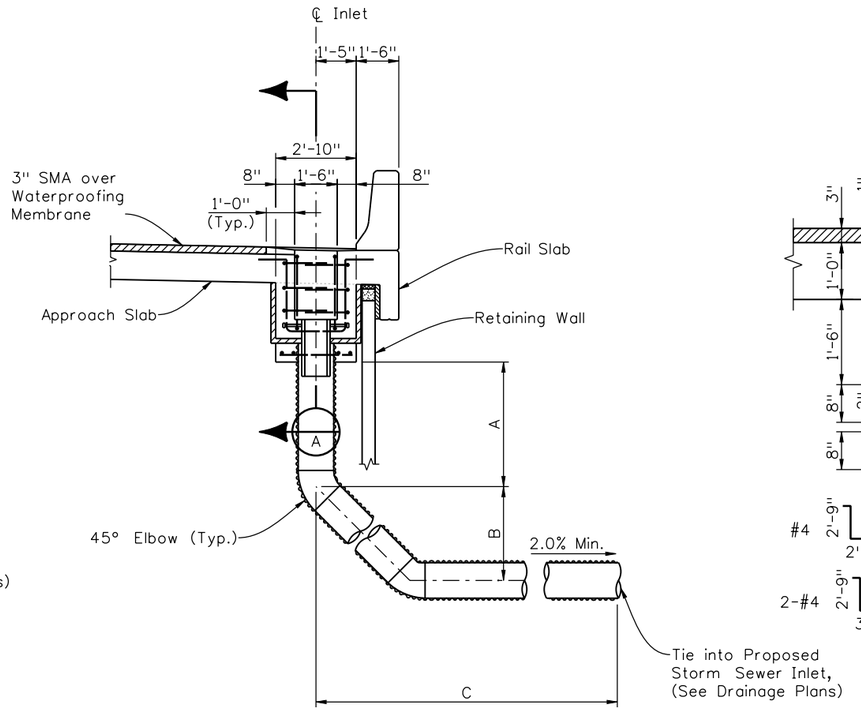

TYPICAL SECTION NEAR NORTH APPROACH SLAB

(Looking North) (Dimensions measured perpendicular to Ramp 1 HCL except as noted otherwise)

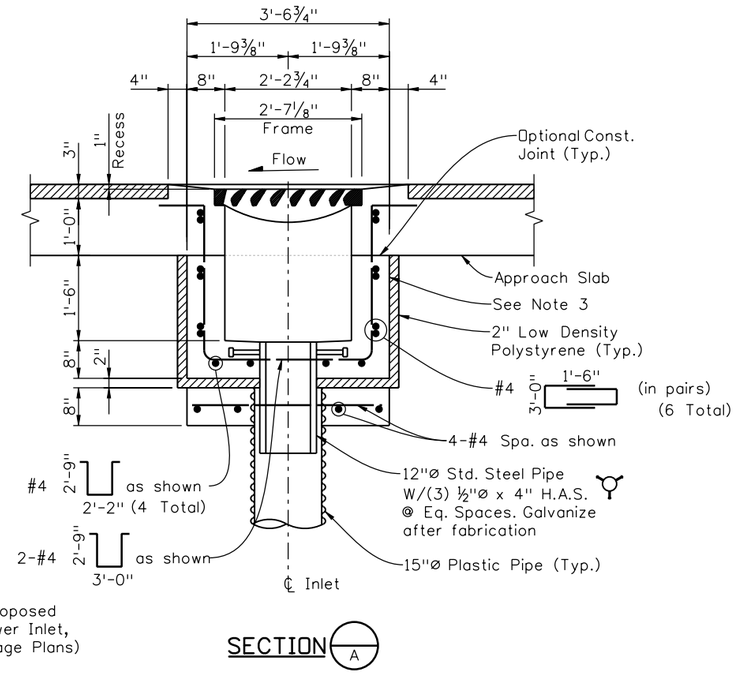

SECTION A

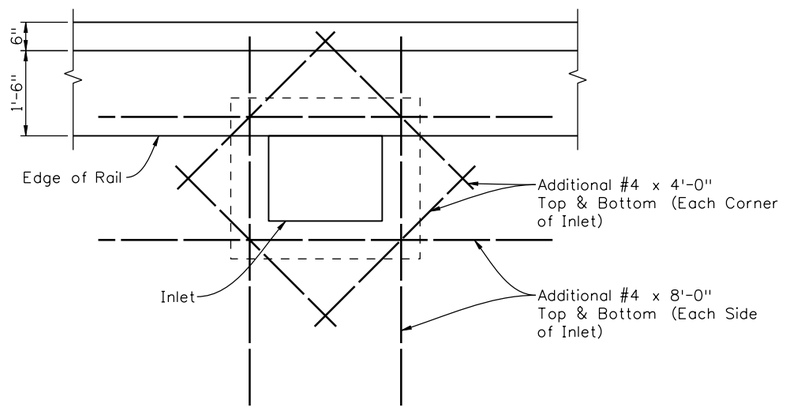

ADDITIONAL SLAB REINFORCING AT INLETS

OUTLET PIPE DIMENSIONS			
INLET	A	B	C
South	4'-0"	x	x
North	2'-0"	x	x

NOTES:

1. Cut approach slab reinforcing as required for inlet opening. Paint cut ends of epoxy coated reinforcing with and approved coating.
2. Concrete shall be Class D.
3. Provide inlet grate as shown on Sheet Bx. Provide anchor bolts as shown on the Grate Installation Detail.
4. Grate to be installed during construction of inlet box with the vane grate bolted in place to the frame. The cost of the grate, grate frame, expn. joint material, expanded polystyrene and steel pipe shall be included in the work.
5. For Grate & Frame Details, See Sheet Bx.
6. Plastic pipe shall conform to the requirements of C905. Plastic pipe shall be joined for watertight coupling as recommended by the pipe supplier or as approved. All joints shall be mechanically restrained to prevent separation.
7. The cost of excavation, backfill, elbows, wye, hardware, concrete, reinforcing steel, and all miscellaneous items required to install the inlet shall not be paid for separately, but shall be included in the Item 603, 15"ø Plastic Pipe.

Revision Dates (Preliminary Stage Only): MM/YY

Design	INITIAL	DATE	Detail	INITIAL	DATE	Quantities	INITIAL	DATE
Designed By			Detailed By	KJS	08/10	Quantities By		
Checked By			Checked By			Checked By		

soellner 1:50:14 PM K:\08276\16311\Phase 2\Bridge\Drawings\16311BRDG_PH2_F-16-XR_AprDrain01.dgn
9/27/2010 CDOT-PDFDraftQuality_XM.pltcfg *

Print Date: 9/27/2010	
File Name: 16311BRDG_PH2_F-16-XR_AprDrain01.dgn	
Horiz. Scale: 1:1	Vert. Scale: As Noted
Unit Information	Unit Leader Initials

Summit Engineering Group, Incorporated — Consulting Structural Engineers
10822 Toller Drive Suite 330
Littleton, CO 80127

Sheet Revisions		
Date:	Comments	Init.

Colorado Department of Transportation
DEPARTMENT OF TRANSPORTATION
2000 South Holly Street
Denver, CO 80222
Phone: 303-972-9112 FAX: 303-972-9114
Region 6 RLB

As Constructed	
No Revisions:	
Revised:	
Void:	

I-25/SANTA FE INTERCHANGE
RAMP 1 FLYOVER
APPR. SLAB INLET DETAILS (1 OF 2)

Designer:	x	Structure Numbers	F-16-XR
Detailer:	K. Soellner		
Sheet Subset:	Bridge	Subset Sheets:	x of x

Project No./Code	
IM 0254-394	
16311	
Sheet Number	172

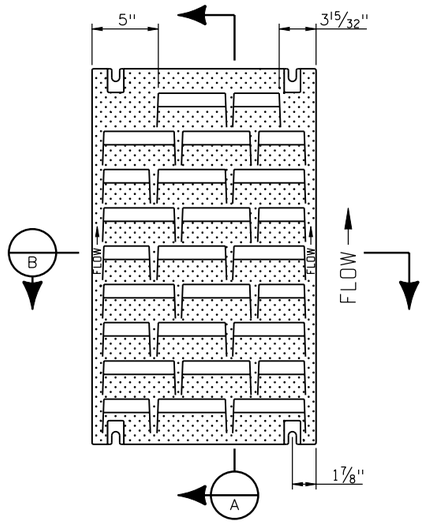

PLAN
SINGLE GRATE

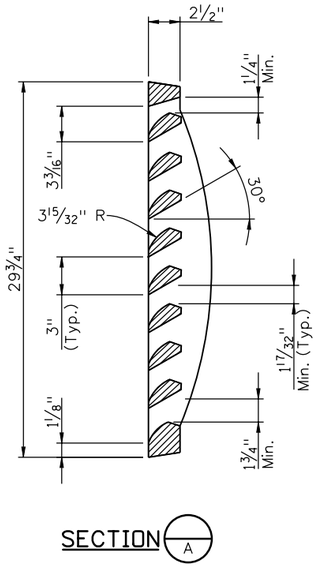

SECTION A

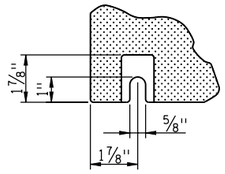

BOLT SLOT DETAIL
(Typ. @ each corner)

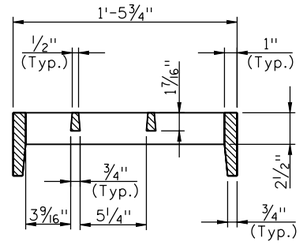

SECTION B

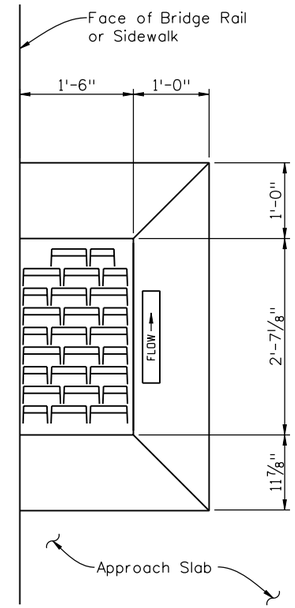

TYPICAL VANE GRATE
INLET APRON

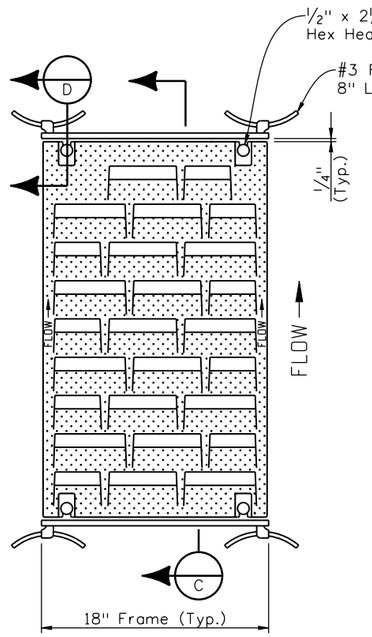

PLAN
SINGLE GRATE WITH FRAME

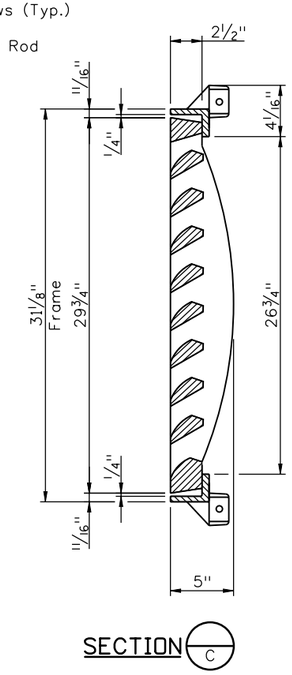

SECTION C

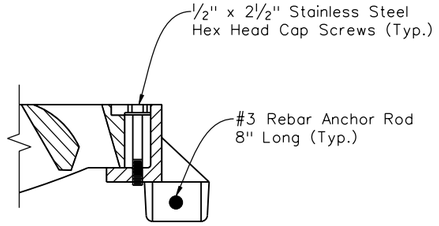

SECTION D

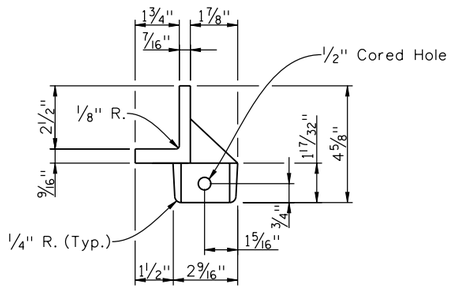

SECTION THRU FRAME

Design: Designed By, Checked By — Detail: Detailed By, Checked By — Quantities: Quantities By, Checked By — Revision Dates (Preliminary Stage Only) MM/YY

soellner 1:50:18 PM K:\08276\16311\Phase 2\Bridge\Drawings\16311BRDG_PH2_F-16-XR_AprDrain02.dgn
9/27/2010 CDOT-PDFDraftQuality_XM.pltcfg *

Print Date: 9/27/2010
File Name: 16311BRDG_PH2_F-16-XR_AprDrain02.dgn
Horiz. Scale: 1:1 Vert. Scale: As Noted
Unit Information Unit Leader Initials

Summit Engineering Group, Incorporated — Consulting Structural Engineers
10822 Teller Drive Suite 330
Littleton, CO 80127

Sheet Revisions		
Date:	Comments	Init.

Colorado Department of Transportation
DOT — Department of Transportation
2000 South Holly Street
Denver, CO 80222
Phone: 303-972-9112 FAX: 303-972-9114
Region 6 RLB

As Constructed
No Revisions:
Revised:
Void:

I-25/SANTA FE INTERCHANGE
RAMP 1 FLYOVER
APPR. SLAB INLET DETAILS (2 OF 2)

Designer: x
Detailer: K. Soellner
Sheet Subset: Bridge
Structure Numbers: F-16-XR
Subset Sheets: x of x

Project No./Code
IM 0254-394
16311
Sheet Number 173

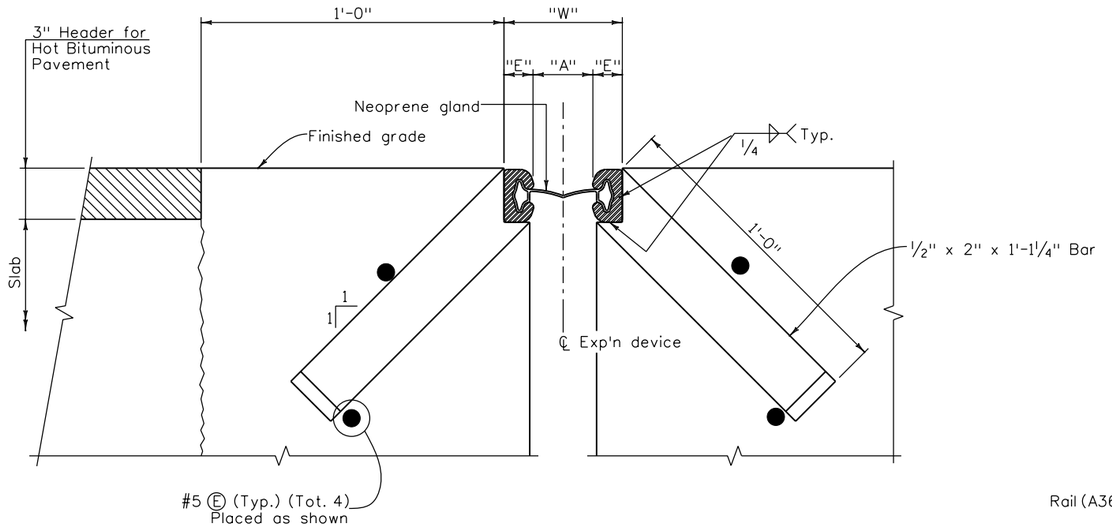

SECTION THRU STRIP SEAL BRIDGE EXPANSION DEVICE

Section taken perpendicular to ℄ exp'n device

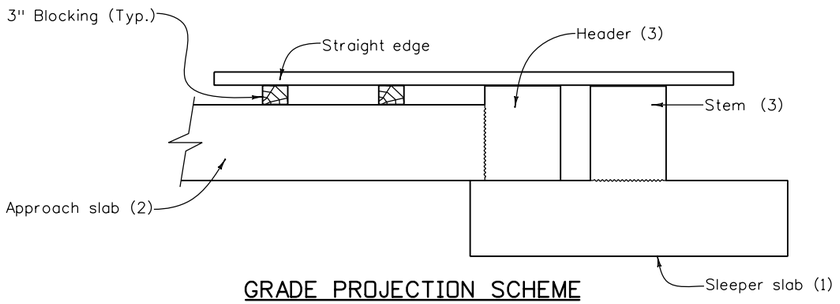

GRADE PROJECTION SCHEME

(Numbers in parenthesis refer to first, second and third concrete pours)

STR. TEMP	"A"	"W"*
-30° F		
0° F		
30° F		
60° F		
90° F		
120° F		

*For E = 1 1/4" (Min.)

Designer:
Dimension "A" shall be 1" minimum and 4" Maximum due to all sources of movement, ie., due to temperature, creep and shrinkage.

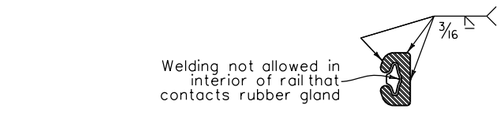

RAIL FIELD SPLICE DETAIL

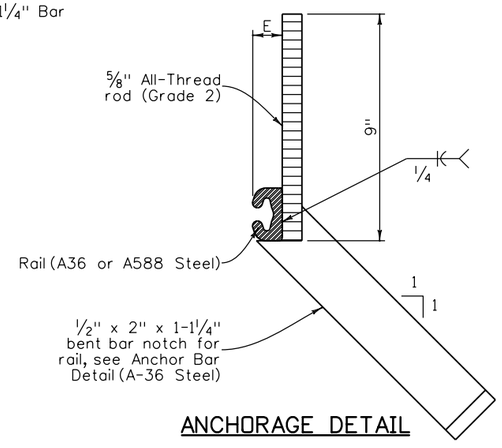

ANCHORAGE DETAIL

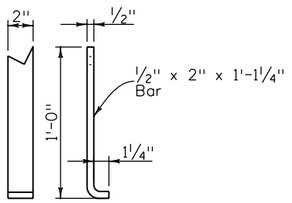

TYPICAL ANCHOR BAR DETAIL

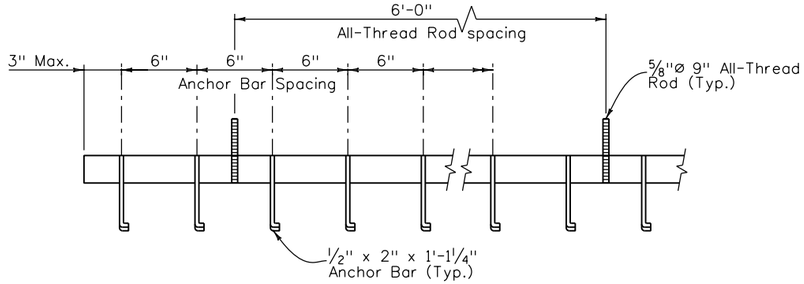

ANCHOR BAR SPACING

NOTES:

The expansion device shall be installed on grade, parallel to the slope and grade of the deck.

After the concrete has attained initial set, the attachments used to hold the expansion device assembly in it's proper position shall be removed.

Do not paint steel surfaces in contact with either concrete or seal.

"W" and "E" dimensions are dependent upon the particular expansion device supplied, and shall be shown on the working drawings.

See table for dimensions "A" and "W"; interpolate as needed. Do not install the gland until dimension "A" has opened up to at least 1 1/2". Use section 518.10(b) in the standard specifications to determine the structure temperature.

The neoprene gland shall be installed in one piece in accordance with section 518 of the standard specifications.

See section 518 in the standard specifications for water tight integrity testing requirements.

Set elevations at top of header and sleeper stem with the grade projection scheme.

ACCEPTABLE EXPANSION DEVICE ALTERNATES

D.S. Brown A2R400-SSA2
WABO SE400 Type A
E-poxy Engineered Materials S400-A Strip Seal

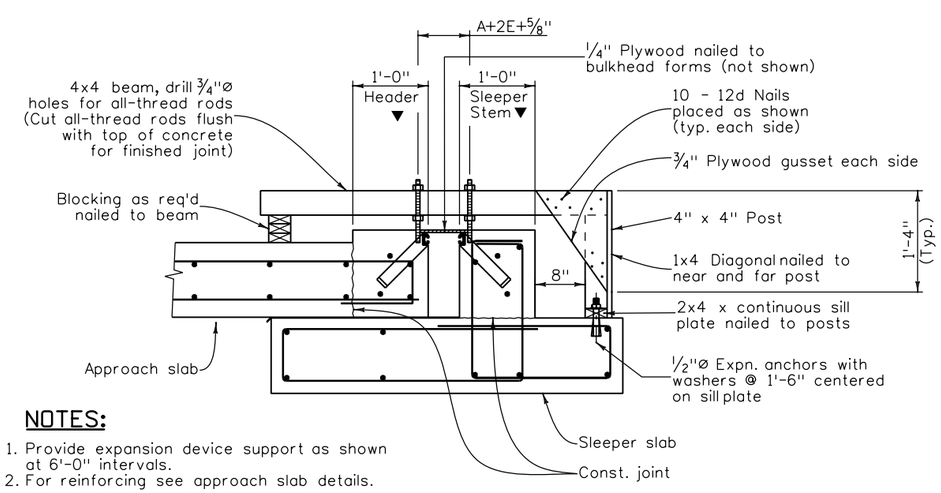

NOTES:

1. Provide expansion device support as shown at 6'-0" intervals.
2. For reinforcing see approach slab details.

▼ Concrete shall be placed after expansion device has been adjusted to proper grade and approved by the engineer using the Grade Projection Scheme.

MINIMUM SUPPORT BRACKET REQUIREMENTS

Revision Dates (Preliminary Stage Only)

Quantities: INITIAL — DATE
Detail: INITIAL RAD 08/10 — DATE 10/10 — Detailed By — Checked By GAR
Design: INITIAL GAR — DATE 08/10 — Designed By — Checked By

Print Date: 9/27/2010
File Name: 16311BRDG_PH2_F-16-XR_ExpnDevice01.dgn
Horiz. Scale: 1:1 Vert. Scale: As Noted
Unit Information Unit Leader Initials

Summit Engineering Group, Incorporated — Consulting Structural Engineers
10822 Teller Drive Suite 330
Littleton, CO 80127

Sheet Revisions		
Date:	Comments	Init.

Colorado Department of Transportation
DOT — Department of Transportation
2000 South Holly Street
Denver, CO 80222
Phone: 303-972-9112 FAX: 303-972-9114
Region 6 RLB

As Constructed
No Revisions:
Revised:
Void:

I-25/SANTA FE INTERCHANGE
RAMP 1 FLYOVER
BR. EXP. DEVICE (0-4 INCH)(1 OF 2)

Designer: G. Reese
Detailer: R. Dillon
Sheet Subset: Bridge
Structure Numbers: F-16-XR
Subset Sheets: Bxx of XX

Project No./Code
IM 0254-394
16311
Sheet Number 174

soellner 1:50:22 PM K:\08276\16311\Phase 2\Bridge\Drawings\16311BRDG_PH2_F-16-XR_ExpnDevice01.dgn
9/27/2010 CDOT-PDFDraftQuality_XM.pltcfg *

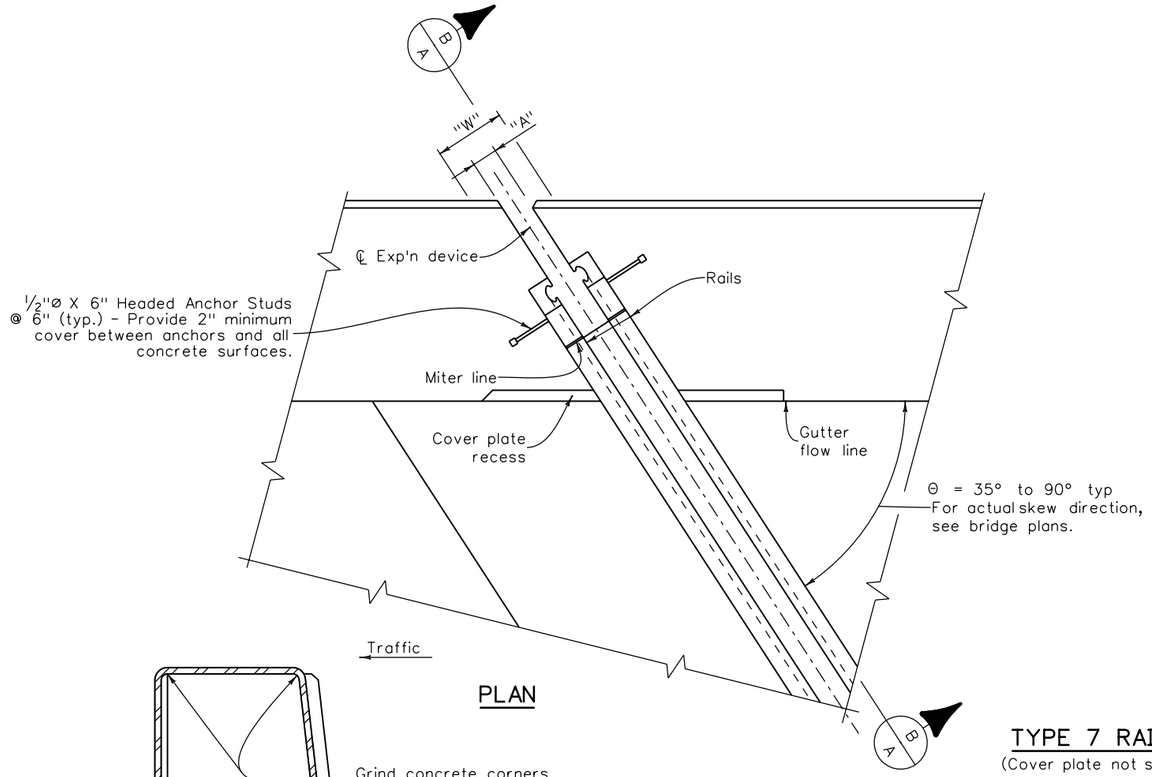

PLAN

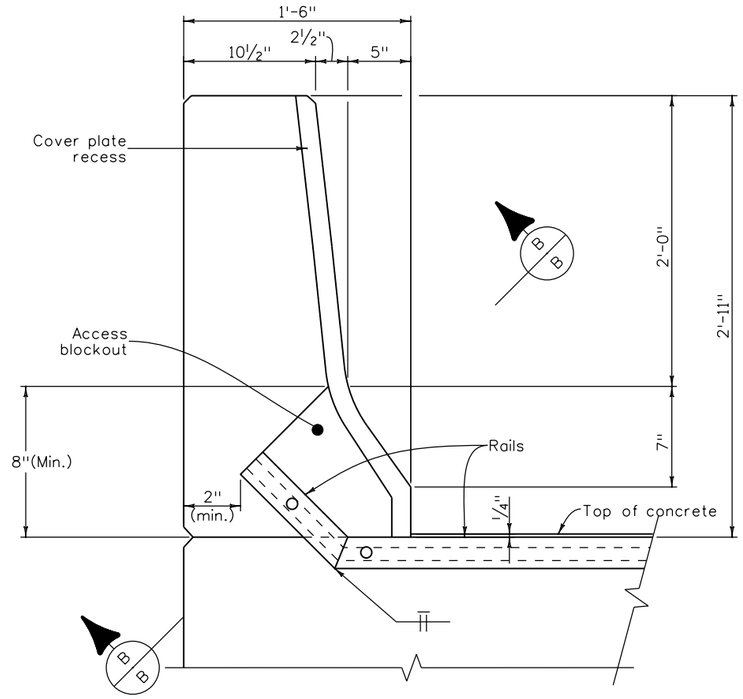

SECTION B/B

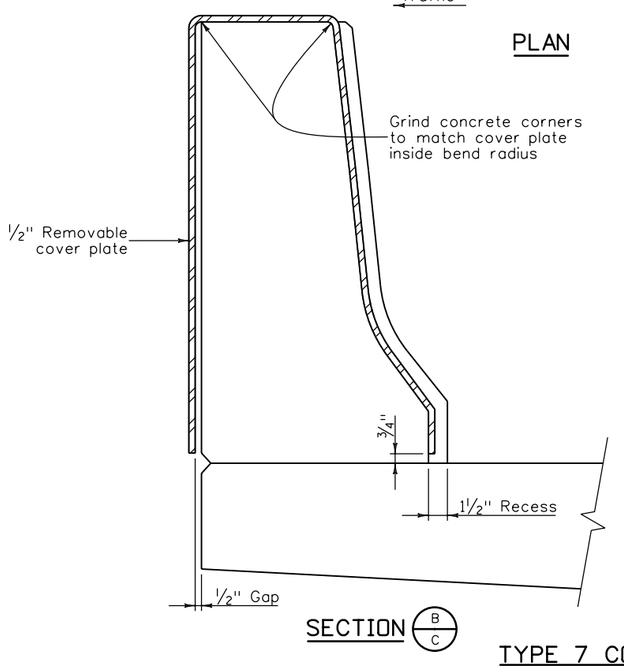

SECTION B/C

TYPE 7 RAIL DETAILS

(Cover plate not shown for clarity)

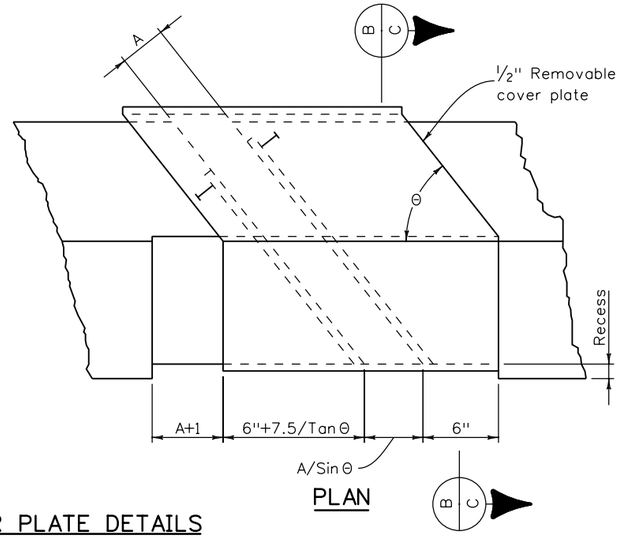

PLAN B/C

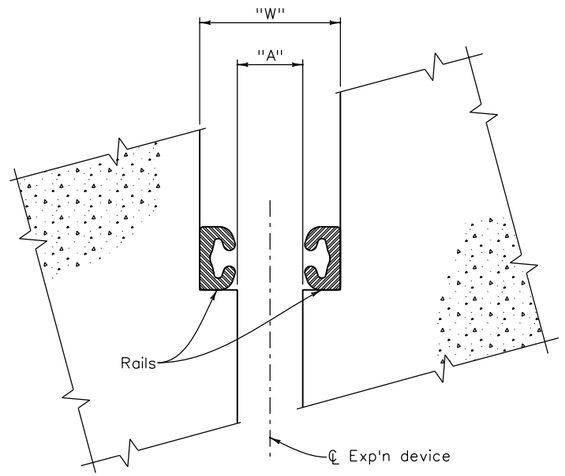

SECTION B/B

TYPE 7 COVER PLATE DETAILS

(Galvanize after fabrication)

Revision Dates (Preliminary Stage Only)

Quantities					
	INITIAL	DATE		Quantities By	
				Checked By	

Detail					
	INITIAL	DATE		Detailed By	
	RAD	08/10		Checked By	
	GAR	10/10			

Design					
	INITIAL	DATE		Designed By	
	GAR	08/10		Checked By	

soellner 1:50:26 PM K:\08276\16311\Phase 2\Bridge\Drawings\16311BRDG_PH2_F-16-XR_ExpnDevice02.dgn
9/27/2010 CDOT-PDFDraftQuality_XM.pltcfg *

Print Date: 9/27/2010
File Name: 16311BRDG_PH2_F-16-XR_ExpnDevice02.dgn
Horiz. Scale: 1:1 Vert. Scale: As Noted
Unit Information Unit Leader Initials

Summit Engineering Group, Incorporated — Consulting Structural Engineers
10822 Teller Drive Suite 330
Littleton, CO 80127

Sheet Revisions

Date:	Comments	Init.

Colorado Department of Transportation
DEPARTMENT OF TRANSPORTATION
2000 South Holly Street
Denver, CO 80222
Phone: 303-972-9112 FAX: 303-972-9114
Region 6 RLB

As Constructed
No Revisions:
Revised:
Void:

I-25/SANTA FE INTERCHANGE
RAMP 1 FLYOVER
BR. EXP. DEVICE (0-4 INCH)(2 OF 2)

Designer:	G. Reese	Structure Numbers	F-16-XR
Detailer:	R. Dillon		
Sheet Subset:	Bridge	Subset Sheets:	Bxx of XX

Project No./Code
IM 0254-394
16311
Sheet Number 175

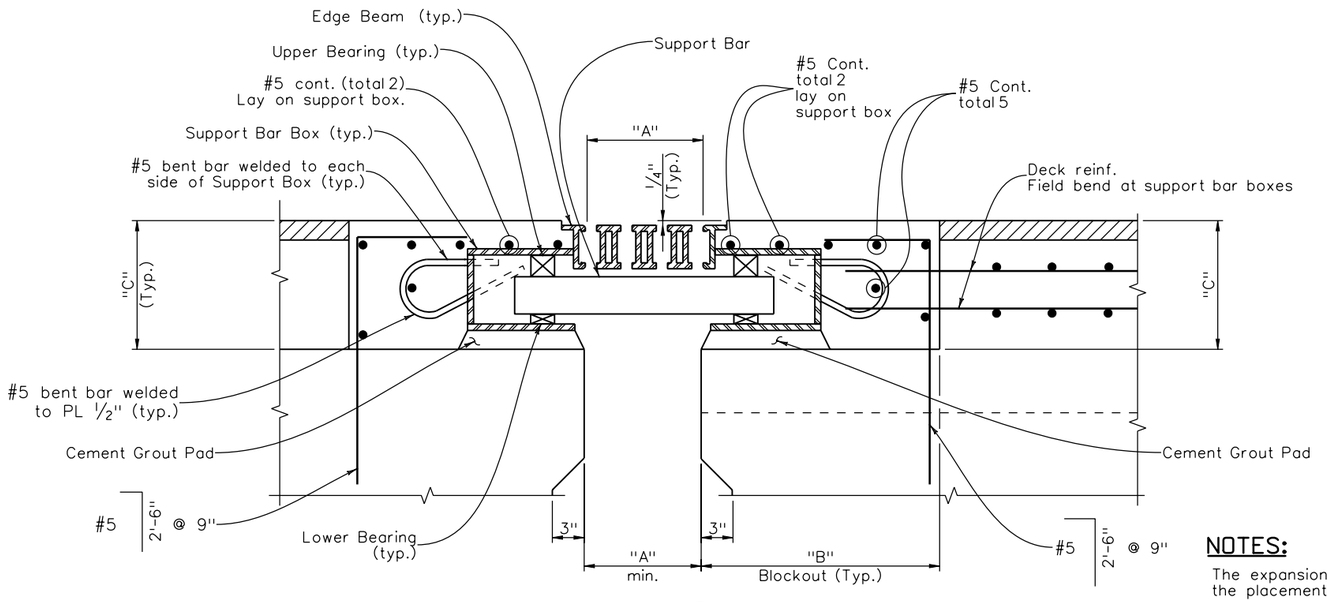

SECTION BX/B

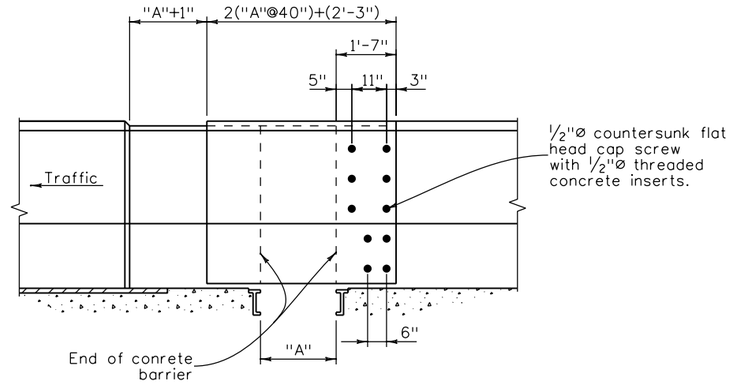

ELEVATION

(Traffic face of Bridge Barrier)

NOTES:

The expansion device shall be loosely in place prior to the placement of deck reinforcing and the deck pour.

Recess joint armor and edge beams 1/4" below finished concrete as shown.

ACCEPTABLE EXPANSION DEVICE ALTERNATES

WABO MODULAR EXPANSION JOINT SYSTEM
STEELFLEX MODULAR EXPANSION JOINT

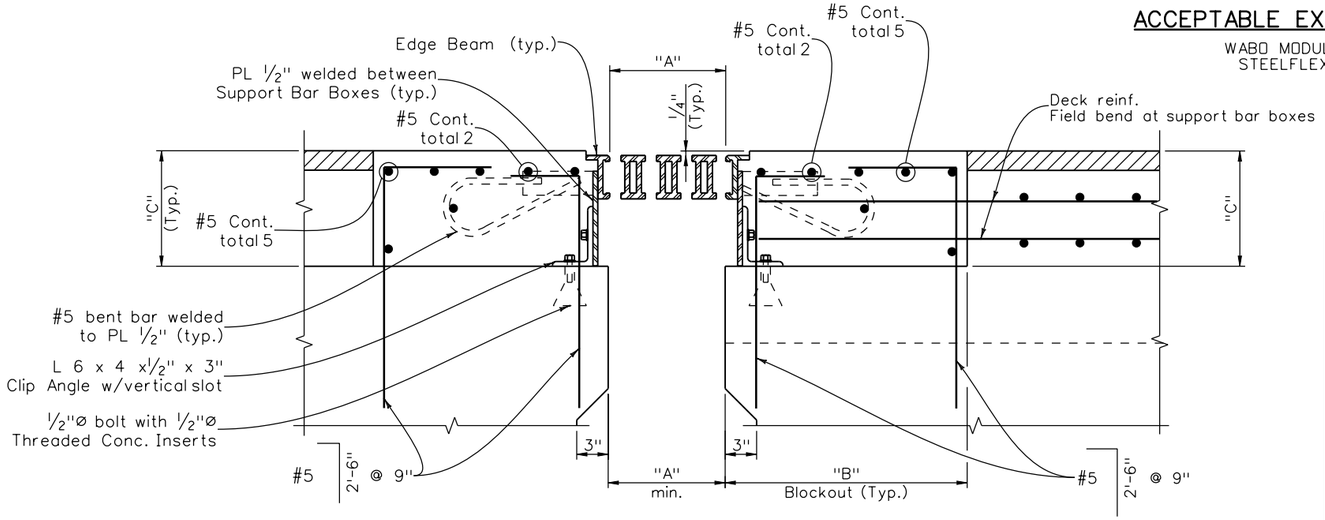

SECTION BX/C

DIMENSIONS	LOCATION	
"A" Structure Temp.		
30°		
40°		
50°		
60°		
70°		
80°		
90°		
100°		
DIMENSIONS		
"B"		
"C"		

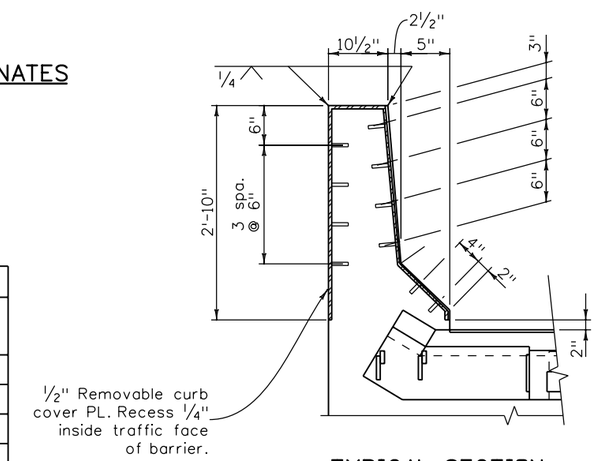

TYPICAL SECTION

Revision Dates (Preliminary Stage Only)							
6/91	8/94	8/96	3/99	11/99	5/00	4/02	3/07

Design			Detail			Quantities		
	INITIAL	DATE		INITIAL	DATE		INITIAL	DATE
Designed By	XXX	MM/YY	Detailed By	XXX	MM/YY	Quantities By	XXX	MM/YY
Checked By	XXX	MM/YY	Checked By	XXX	MM/YY	Checked By	XXX	MM/YY

soellner 1:50:29 PM K:\08276\16311\Phase 2\Bridge\Drawings\16311BRDG_PH2_F-16-XR_ExpnDevice03.dgn
9/27/2010 CDOT-PDFDraftQuality_XM.pltcfg

Print Date: 9/27/2010
File Name: 16311BRDG_PH2_F-16-XR_ExpnDevice03.dgn
Horiz. Scale: 1:1 Vert. Scale: As Noted
Unit Information Unit Leader Initials

Summit Engineering Group, Incorporated Consulting Structural Engineers
10822 Toller Drive Suite 330 Littleton, CO 80127

Sheet Revisions		
Date:	Comments	Init.

Colorado Department of Transportation
4201 East Arkansas Avenue
2000 South Holly Street
Denver, CO 80222-3400
Phone: 303-757-9152 FAX: 303-757-9147
Region 6 Bridge Branch Rich Bals

As Constructed
No Revisions:
Revised:
Void:

I-25/SANTA FE INTERCHANGE
RAMP 1 FLYOVER
BR. EXP. DEVICE (0-12 INCH)(1 OF 2)

Designer:	X	Structure Numbers	F-16-XR
Detailer:	K. Soellner		
Sheet Subset:	Bridge	Subset Sheets:	XXX of XX

Project No./Code
IM 0254-394
16311
Sheet Number 176

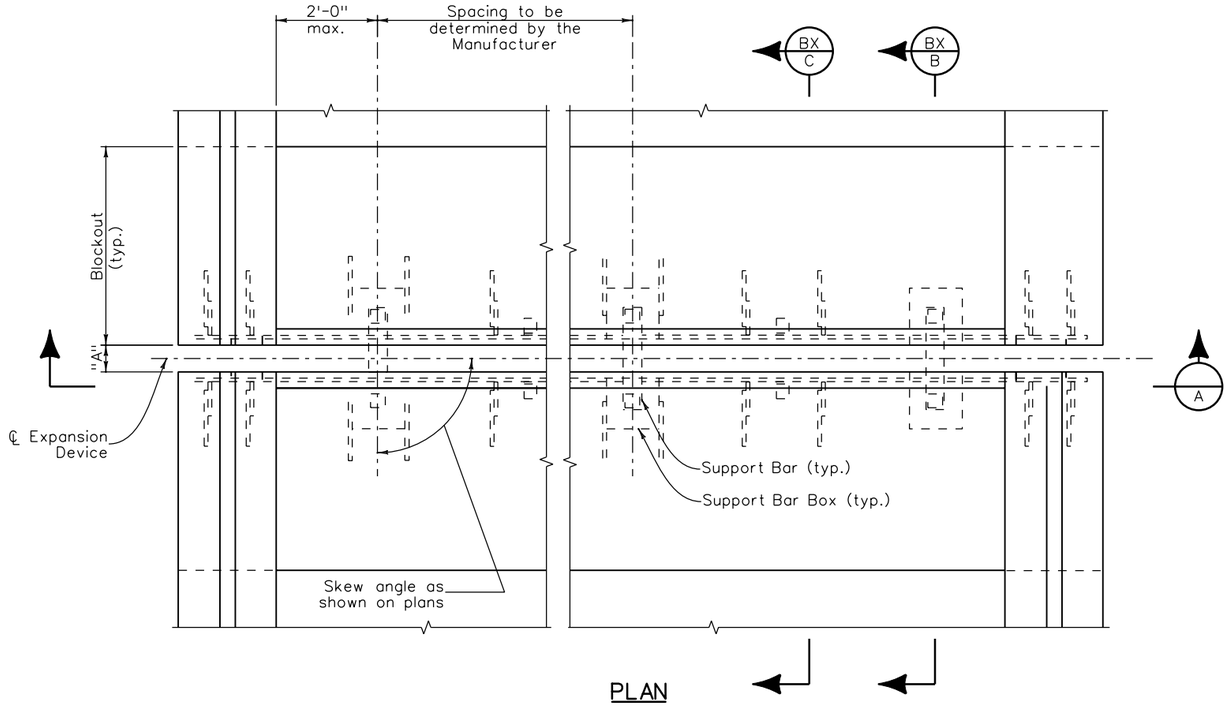

PLAN

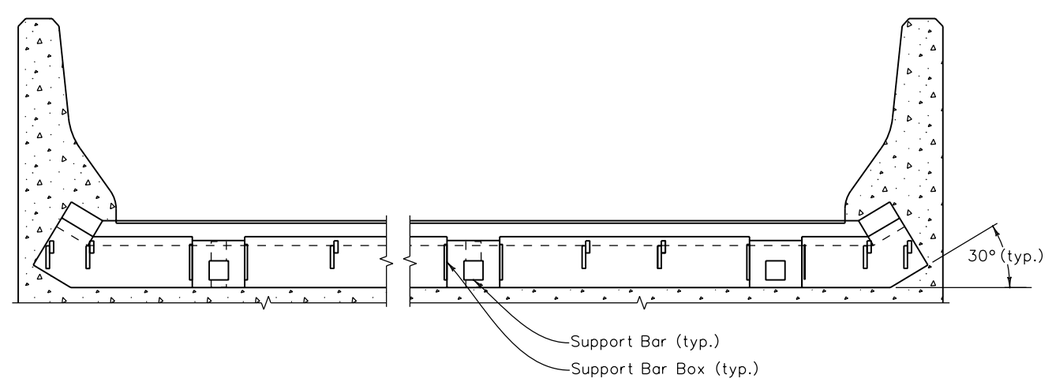

SECTION A

NOTES:

Device shown is schematic only. Total number of support bars to be used as per Manufacturer's requirements.

Cover plates for concrete barriers not shown for clarity. For details, see Dwg. No. B___.

Revision Dates						
6/91	8/94	3/99	11/99	4/02	3/07	

(Preliminary Stage Only)

Design			Detail			Quantities		
	INITIAL	DATE		INITIAL	DATE		INITIAL	DATE
Designed By	XXX	MM/YY	Detailed By	XXX	MM/YY	Quantities By	XXX	MM/YY
Checked By	XXX	MM/YY	Checked By	XXX	MM/YY	Checked By	XXX	MM/YY

soellner 1:50:32 PM K:\08276\16311\Phase 2\Bridge\Drawings\16311BRDG_PH2_F-16-XR_ExpnDevice04.dgn
9/27/2010 CDOT-PDFDraftQuality_XM.pltcfg *

Print Date: 9/27/2010
File Name: 16311BRDG_PH2_F-16-XR_ExpnDevice04.dgn
Horiz. Scale: 1:1 Vert. Scale: As Noted
Unit Information Unit Leader Initials

Summit Engineering Group, Incorporated Consulting Structural Engineers
10822 Toller Drive Suite 330
Littleton, CO 80127

Sheet Revisions		
Date:	Comments	Init.

Colorado Department of Transportation
4201 East Arkansas Avenue
Room 303
Denver, CO 80222-3400
Phone: 303-757-9152 FAX: 303-757-9197
Region 6 Bridge Branch Rutals

As Constructed
No Revisions:
Revised:
Void:

I-25/SANTA FE INTERCHANGE
RAMP 1 FLYOVER
BR. EXP. DEVICE (0-12 INCH)(2 OF 2)

Designer:	x	Structure Numbers	F-16-XR
Detailer:	K. Soellner		
Sheet Subset:	Bridge	Subset Sheets:	XXX of XX

Project No./Code
IM 0254-394
16311
Sheet Number 177

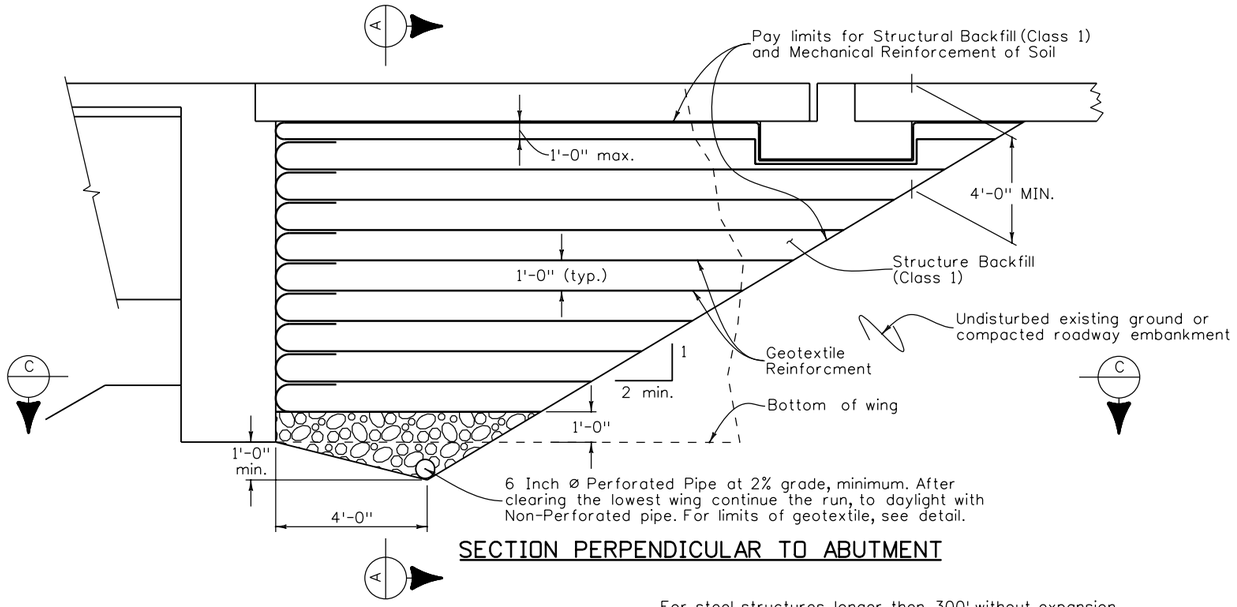

SECTION PERPENDICULAR TO ABUTMENT

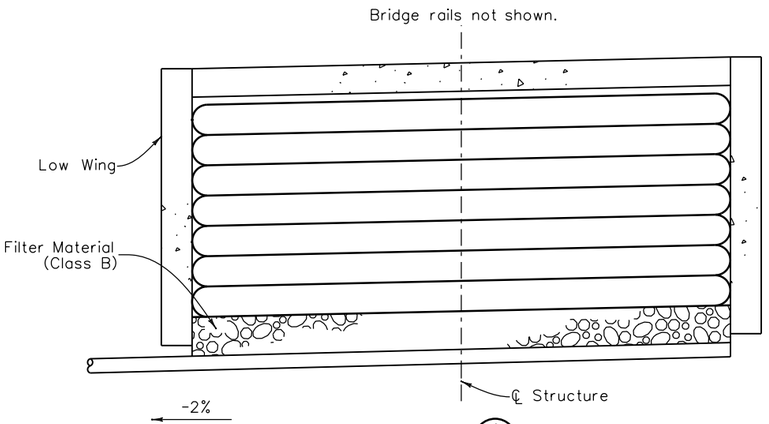

SECTION (A)

For steel structures longer then 300' without expansion devices between abutments and for abutments greater then 12' high, provide gap between the abutment and backfill. The gap width shall be at least 0.5% of the abutment height, 1" minimum. See Gap Detail 1 and 2. Do not provide this gap at bottom 2 nor the top 2 layers of Reinforced Soil.

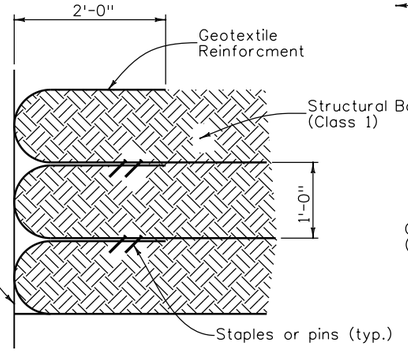

WRAP DETAIL

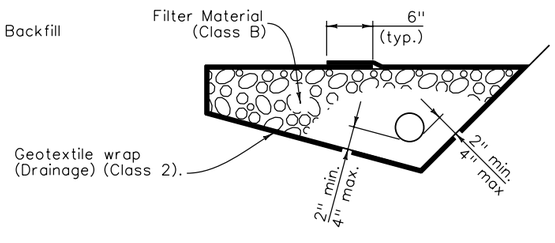

6 INCH PERFORATED PIPE UNDERDRAIN

6 Inch Perforated Pipe Underdrain includes all Filter Material (Class B) and Geotextile wrap (Drainage) (Class 2).

Designer/Detailer:

Discharge into erosion protection (such as riprap or energy dissipators) as needed. Extend and support non-perforated pipe such that a minimum 6" clearance remains below flowline.

SECTION (C)

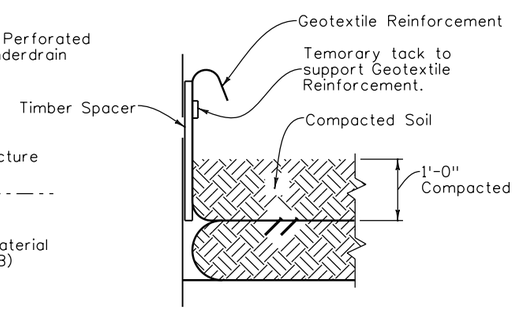

GAP DETAIL STEP 1

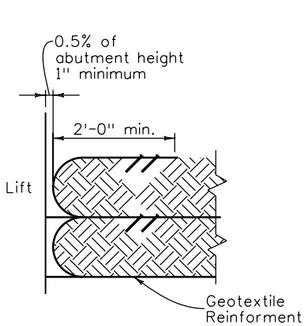

GAP DETAIL STEP 2

When required, the Geotextile Reinforcement wrap at Back Face of Abutment shall be temporarily hung with a spacer board and tack strip. After reaching a total of 1'-0" compacted lift, the tack strip shall be removed and Geotextile Reinforcement shall be pulled back slack free with its end anchored to soil underneath with staple or pins before the spacer board is pulled. Any alternate method to maintain the minimum gap between abutment concrete and Reinforced Soil may be proposed to the Engineer for approval.

NOTES:

Geotextile reinforcement shall be woven fabric with a Minimum Average Roll Value of 4800 lb/ft for installations with a gap and 2400 lb/ft for installations without a gap based on ASTM D4595.

Geotextile Reinforcement shall be placed by alternating Machine Direction (MD) with Cross Machine Direction (XD) from layer to layer.

The Geotextile Reinforcement wrap at Back Face of Abutment shall be pulled back slack free with its end anchored to soil underneath with staples or pins.

Minimum splice of all Geofabric shall consist of 6" of overlap.

Payment will be made under Item 206 Mechanical Reinforcement of Soil (cu.yd.) and Item 206 Structure Backfill (Class 1) (cu.yd.) and Shall include the cost for 6 inch ø Perforated Pipe underdrain and Subsurface Drain Outlet (6 inch ø NonPerforated Pipe).

Installation of Pipe Underdrain and Subsurface Drain Outlet will conform to the Construction requirements of section 605.03 and 605.06, respectively.

(Preliminary Stage Only)

Revision Dates	MM/YY

Quantities	INITIAL	DATE
Quantities By		
Checked By		

Detail	INITIAL	DATE
Detailed By	KJS	08/10
Checked By		

Design	INITIAL	DATE
Designed By		
Checked By		

soellner 1:50:35 PM K:\08276\16311\Phase 2\Bridge\Drawings\16311BRDG_PH2_F-16-XR_EXBF01.dgn
9/27/2010 CDOT-PDFDraftQuality_XM.pltcfg *

Print Date: 9/27/2010
File Name: 16311BRDG_PH2_F-16-XR_EXBF01.dgn
Horiz. Scale: 1:1 Vert. Scale: As Noted
Unit Information Unit Leader Initials

Summit Engineering Group, Incorporated
Consulting Structural Engineers
10822 Teller Drive Suite 330
Littleton, CO 80127

Sheet Revisions		
Date:	Comments	Init.

Colorado Department of Transportation
DOT — Department of Transportation
2000 South Holly Street
Denver, CO 80222
Phone: 303-972-9112 FAX: 303-972-9114
Region 6 RLB

As Constructed
No Revisions:
Revised:
Void:

I-25/SANTA FE INTERCHANGE
RAMP 1 FLYOVER
MECH.STAB.EARTH BACKFILL (1 OF 2)

Designer:	G. Reese	Structure Numbers	F-16-XR
Detailer:	R. Dillon		
Sheet Subset:	Bridge	Subset Sheets:	Bxx of XX

Project No./Code
IM 0254-394
16311
Sheet Number 178

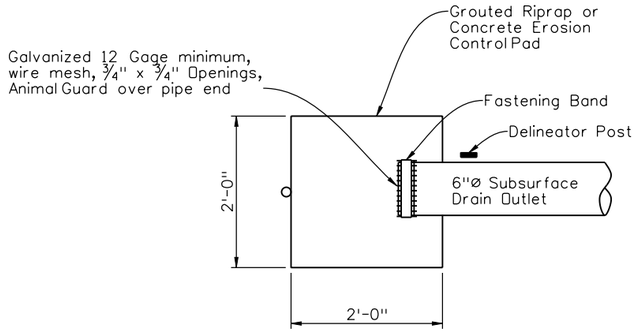

PLAN

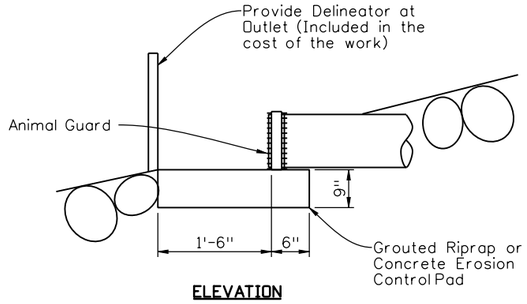

ELEVATION

OUTLET PIPE END TREATMENT

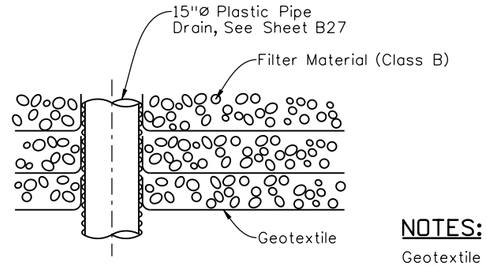

VERTICAL PLASTIC PIPE PENETRATION DETAIL

NOTES:

Geotextile layers remain continuous across the width of the abutment.

The Geotextile shall be Cross-Cut in an X pattern at the intersection with 15"ø Plastic Pipe.

Design	INITIAL	DATE
Designed By		
Checked By		

Detail	INITIAL	DATE
Detailed By	KJS	08/10
Checked By		

Quantities	INITIAL	DATE
Quantities By		
Checked By		

Revision Dates (Preliminary Stage Only)	MM/YY

Print Date: 9/27/2010
File Name: 16311BRDG_PH2_F-16-XR_EXBF02.dgn
Horiz. Scale: 1:1 Vert. Scale: As Noted
Unit Information Unit Leader Initials

Summit Engineering Group, Incorporated
CONSULTING STRUCTURAL ENGINEERS
10822 Teller Drive Suite 330
Littleton, CO 80127

Sheet Revisions

Date:	Comments	Init.

Colorado Department of Transportation
DEPARTMENT OF TRANSPORTATION
2000 South Holly Street
Denver, CO 80222
Phone: 303-972-9112 FAX: 303-972-9114
Region 6 RLB

As Constructed
No Revisions:
Revised:
Void:

I-25/SANTA FE INTERCHANGE
RAMP 1 FLYOVER
MECH.STAB.EARTH BACKFILL (2 OF2)

Designer: X
Detailer: K. Soellner
Sheet Subset: Bridge
Structure Numbers: F-16-XR
Subset Sheets: X of X

Project No./Code
IM 0254-394
16311
Sheet Number 179

soellner 1:50:39 PM K:\08276\16311\Phase 2\Bridge\Drawings\16311BRDG_PH2_F-16-XR_EXBF02.dgn
9/27/2010 CDOT-PDFDraftQuality_XM.pltcfg *

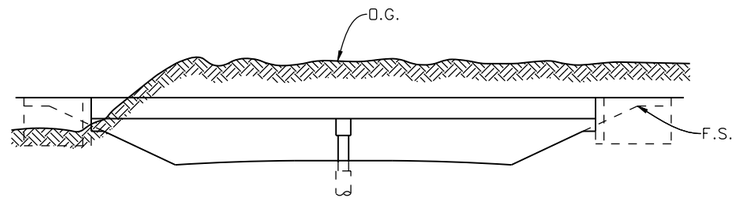

ELEVATION

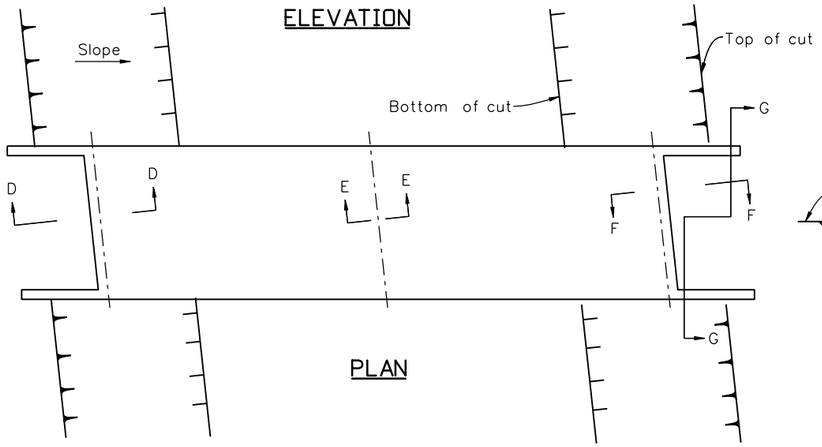

PLAN

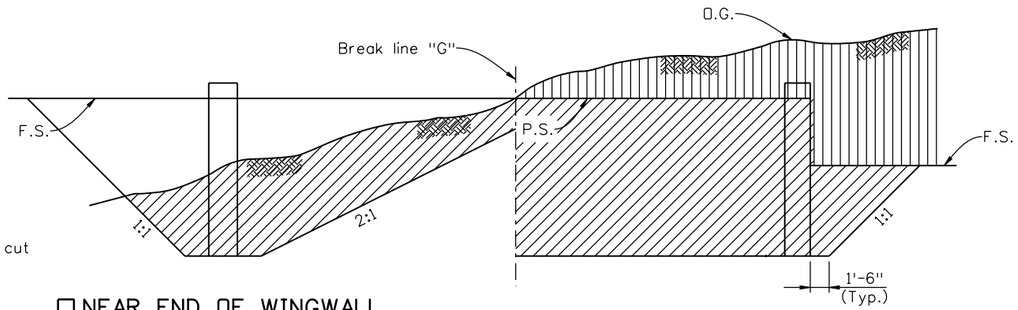

☐ NEAR END OF WINGWALL

NEAR B.F. OF ABUTMENT

SECTION G-G (EXCAVATION)

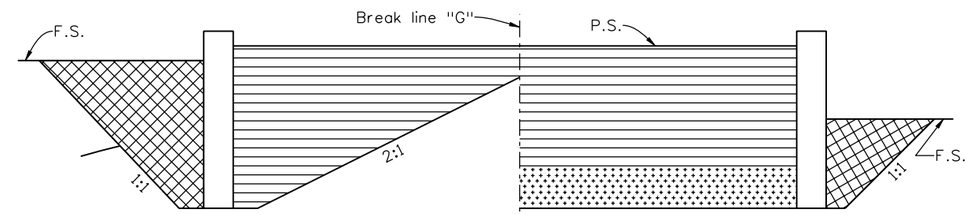

☐ NEAR END OF WINGWALL

NEAR B.F. OF ABUTMENT

SECTION G-G (BACKFILL)

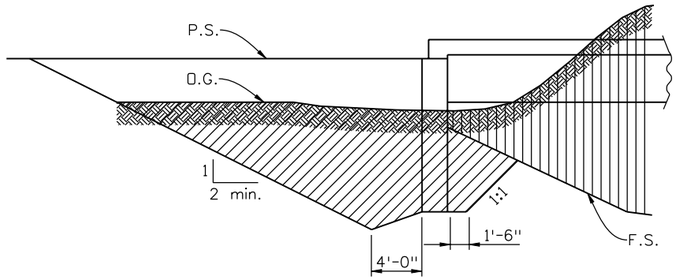

SECTION D-D (EXCAVATION)

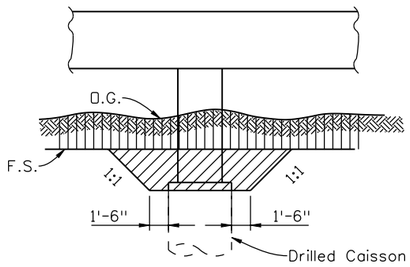

SECTION E-E (EXCAVATION)

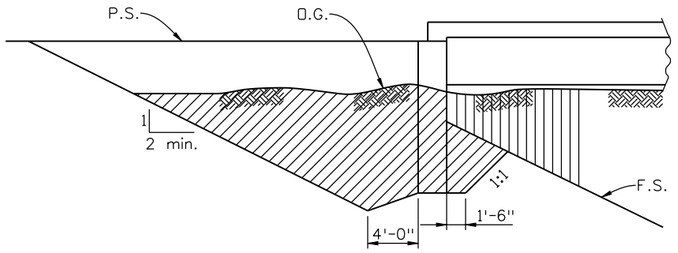

SECTION F-F (EXCAVATION)

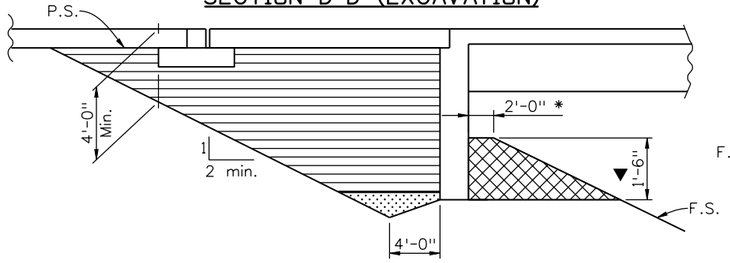

SECTION D-D (BACKFILL)

* = Minimum berm dimension.
▼ = Minimum embedment, of abut., in Structure Backfill.

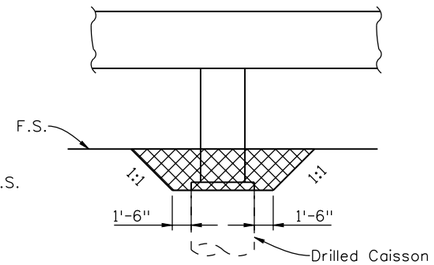

SECTION E-E (BACKFILL)

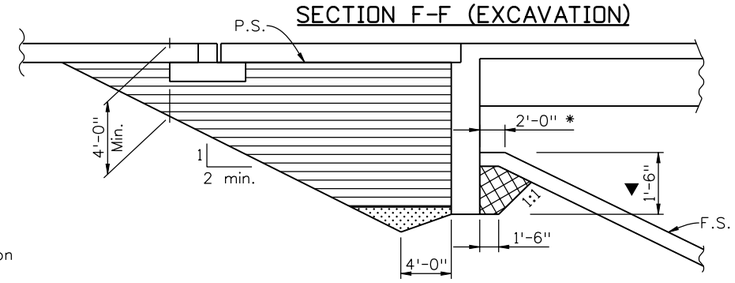

SECTION F-F (BACKFILL)

GENERAL NOTES

Unless shown otherwise in the plans, this drawing gives the minimum extent of Structure Excavation and Structure Backfill. The Contractor may elect to extend the Structure Excavation and Structure Backfill beyond the limits shown here. Any additional Excavation or Backfill beyond these limits will not be measured nor paid for.

Structure footings which are located in rock shall be poured out to undisturbed rock, without forming, in conformance with 601.09.

Structure Excavation for Slope Paving not shown.

☐ For purposes of quantity calculations this template applies out to end of wingwall.

LEGENDS

- Roadway Excavation
- Structure Excavation
- Structure Backfill (Special)
- Structure Backfill (Class 2)
- Filter Material

ABBREVIATIONS

O.G.	Original Ground
P.S.	Planned Subgrade
F.S.	Planned Finished Surface

Design			Detail			Quantities		
	INITIAL	DATE		INITIAL	DATE		INITIAL	DATE
Designed By			Detailed By	KJS	08/10	Quantities By		
Checked By			Checked By			Checked By		

Revision Dates (Preliminary Stage Only)
MM/YY

soellner 1:50:42 PM K:\08276\16311\Phase 2\Bridge\Drawings\16311BRDG_PH2_F-16-XR_EXBF03.dgn
9/27/2010 CDOT-PDFDraftQuality_XM.pltcfg *

Print Date: 9/27/2010
File Name: 16311BRDG_PH2_F-16-XR_EXBF03.dgn
Horiz. Scale: 1:1 Vert. Scale: As Noted
Unit Information Unit Leader Initials

Summit Engineering Group, Incorporated — Consulting Structural Engineers
10822 Toller Drive Suite 330
Littleton, CO 80127

Sheet Revisions		
Date:	Comments	Init.

Colorado Department of Transportation
2000 South Holly Street
Denver, CO 80222
Phone: 303-972-9112 FAX: 303-972-9114
Region 6 RLB

As Constructed
No Revisions:
Revised:
Void:

I-25/SANTA FE INTERCHANGE
RAMP 1 FLYOVER
EXCAVATION & BACKFILL DETAILS

Designer:	X	Structure Numbers	F-16-XR
Detailer:	K. Soellner		
Sheet Subset:	Bridge	Subset Sheets:	X of X

Project No./Code
IM 0254-394
16311
Sheet Number 180

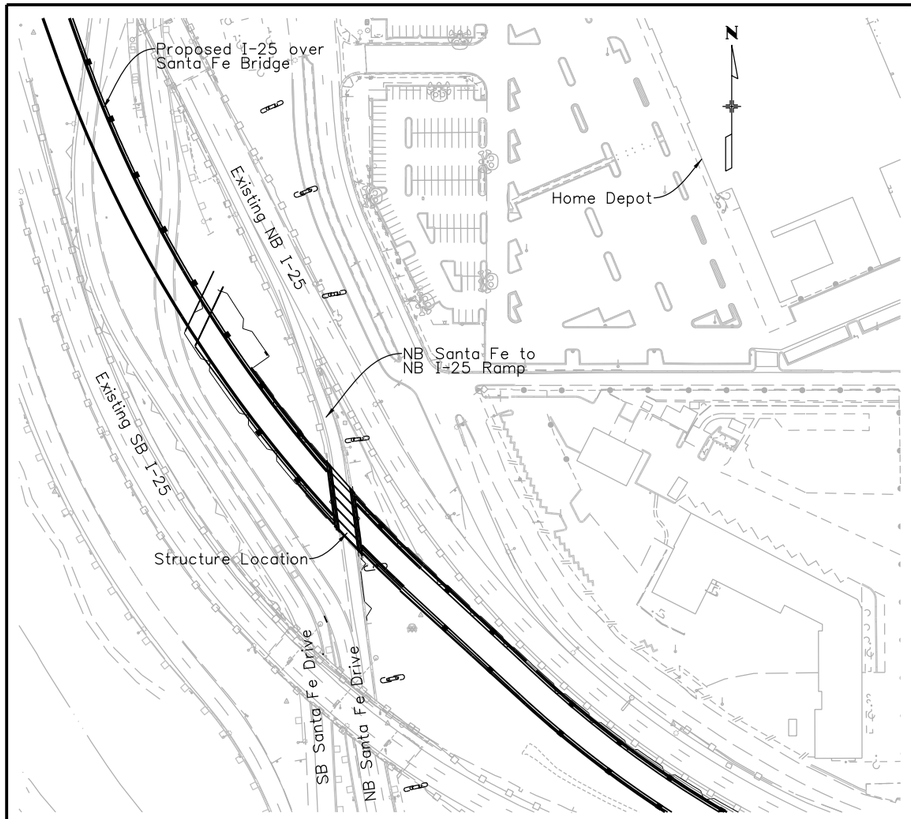

PLAN

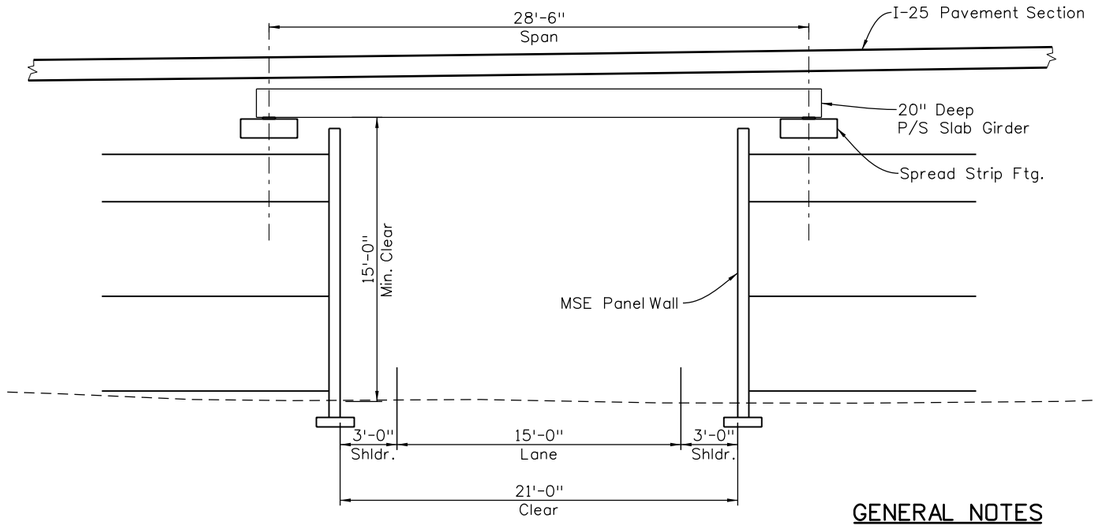

BRIDGE ELEVATION
(Looking North)

GENERAL NOTES

The contractor shall be responsible for the design and construction of the Temporary Bridge based upon these drawings and revision of project Specification Section 621 - Temporary Bridge.

The alternative shown is one option for the contractor, however alternate bridge concepts may be submitted for approval by the Engineer. See Project Special Provision 621 - Temporary Bridge for additional information.

The Temporary Bridge shall be removed in Phase 5, and backfilled per the project special provision.

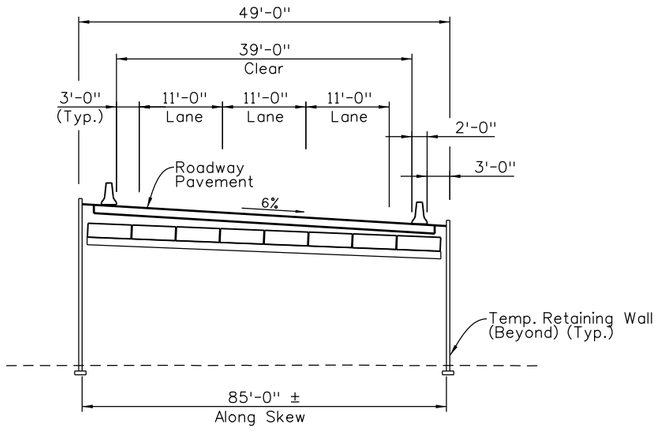

BRIDGE SECTION
(Looking West)

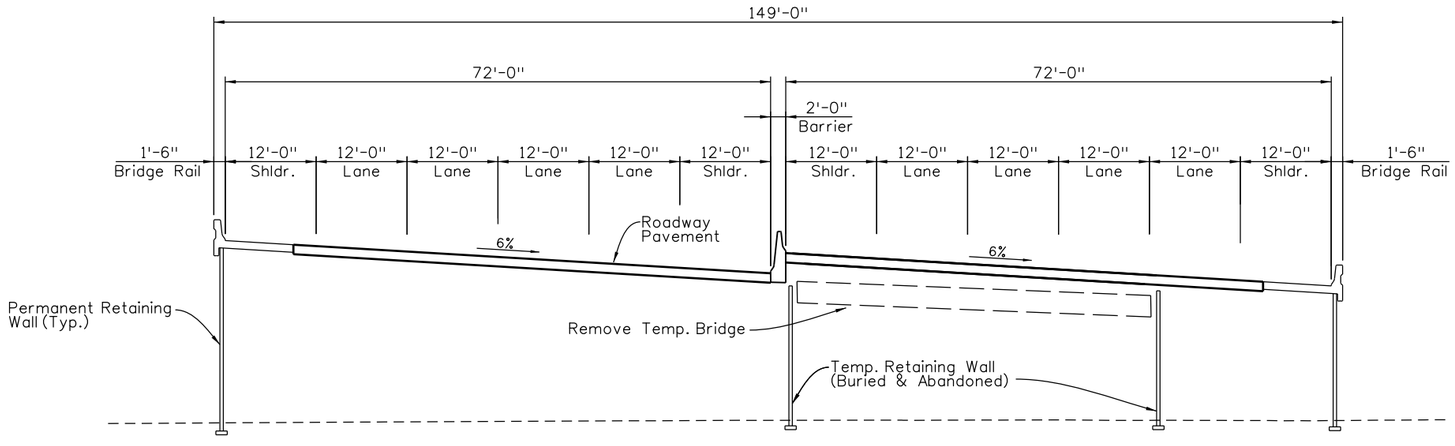

ULTIMATE SECTION
(Looking West)

Print Date: 9/27/2010		Sheet Revisions		
File Name: 16311BRDG_PH2_TempBrg_GenLay01.dgn		Date:	Comments	Init.
Horiz. Scale: 1:200	Vert. Scale: As Noted			
Unit Information	Unit Leader Initials			
FELSBURG HOLT & ULLEVIG 6300 South Syracuse Way Centennial, CO 80111 25 years of engineering paths to transportation solutions				

Colorado Department of Transportation
2000 South Holly Street
Denver, CO 80222
Phone: 303-972-9112 FAX: 303-972-9114
Region 6 RLB

As Constructed	
No Revisions:	
Revised:	
Void:	

I-25/SANTA FE INTERCHANGE
TEMPORARY BRIDGE
GENERAL LAYOUT

Designer:	P. STEIN	Structure Numbers	
Detailer:	R. DILLON		
Sheet Subset:	BRIDGE	Subset Sheets:	BT1 of 1

Project No./Code	
IM 0254-394	
16311	
Sheet Number	181

Design	INITIAL	DATE
Designed By	PRS	10/09
Checked By		

Detail	INITIAL	DATE
Detailed By	RAD	10/09
Checked By	PRS	10/09

Quantities	INITIAL	DATE
Quantities By		
Checked By		

Revision Dates (Preliminary Stage Only)
MM/YY

Patrick 5:58:24 PM K:\08276\16311\Phase 2\Bridge\Drawings\16311BRDG_PH2_TempBrg_GenLay01.dgn
9/27/2010 CDOT-DefaultPrinter_XM.pltcfg CDOT-PenTable.tbl

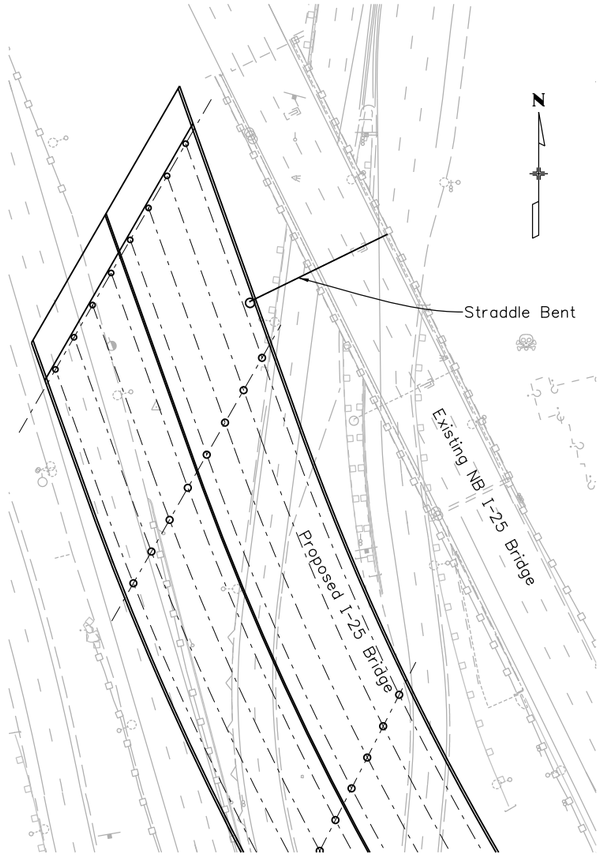

LOCATION MAP

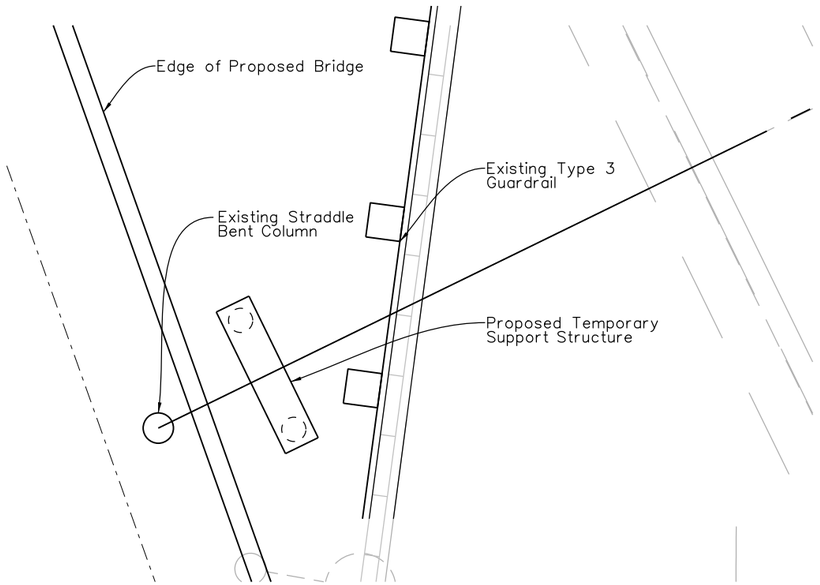

PLAN

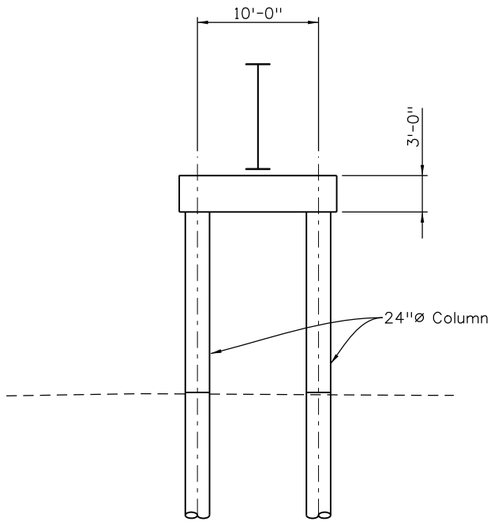

SECTION

ELEVATION

GENERAL NOTES

The contractor shall temporarily support the existing straddle bent based upon these drawings and revision of project Specification Section 509 - Provide Temporary Support.

The temporary support system shall be removed in Phase 6, in conjunction with the removal of the existing northbound bridge. Caissons shall be removed 3 feet below existing ground.

Print Date: 9/27/2010		Sheet Revisions			Colorado Department of Transportation	As Constructed
File Name: 16311BRDG_PH2_Support_GenLay01.dgn		Date:	Comments	Init.	2000 South Holly Street	No Revisions:
Horiz. Scale: 1:100 Vert. Scale: As Noted					Denver, CO 80222	Revised:
Unit Information Unit Leader Initials					Phone: 303-972-9112 FAX: 303-972-9114	Void:
FELSBURG HOLT & ULLEVIG 6300 South Syracuse Way Centennial, CO 80111 25 years of engineering paths to transportation solutions					Region 6 RLB	

I-25/SANTA FE INTERCHANGE TEMPORARY SUPPORT GENERAL LAYOUT			
Designer: P. STEIN	Structure Numbers		Project No./Code
Detailer: R. DILLON			IM 0254-394
Sheet Subset: BRIDGE	Subset Sheets: BS1 of 1		16311
			Sheet Number 182

Patrick 5:57:27 PM K:\08276\16311\Phase 2\Bridge\Drawings\16311BRDG_PH2_Support_GenLay01.dgn
9/27/2010 CDOT-DefaultPrinter_XM.pltcfg CDOT-PenTable.tbl

GENERAL NOTES

ALL WORK SHALL BE DONE IN ACCORDANCE WITH THE COLORADO DEPARTMENT OF TRANSPORTATION (CDOT) 2005 STANDARD SPECIFICATIONS FOR ROAD AND BRIDGE CONSTRUCTION, AND CITY OF AURORA STANDARD SPECIFICATIONS APPLICABLE TO THE PROJECT.

EXCEPT AS SHOWN IN THE PLANS, STRUCTURE EXCAVATION AND BACKFILL SHALL BE IN ACCORDANCE WITH M-206-1 FOR STRUCTURES.

EXPANSION JOINT MATERIAL SHALL MEET AASHTO SPECIFICATION M-213.

ALL EXPOSED CONCRETE EDGES SHALL HAVE A ¾" CHAMFER UNLESS DETAILED OR OTHERWISE NOTED.

STRUCTURAL CONCRETE EXPOSED TO SOIL SHALL CONFORM TO CEMENTITIOUS MATERIALS REQUIREMENTS CLASS 2, CORRESPONDING TO SULFATE EXPOSURE CLASS 0. SLOPE PAVING CONCRETE AND ALL STRUCTURAL CONCRETE NOT EXPOSED TO SOIL SHALL CONFORM TO CEMENTITIOUS MATERIALS REQUIREMENTS CLASS 2, CORRESPONDING TO SULFATE EXPOSURE CLASS 2.

A STRUCTURAL CONCRETE STAIN WILL BE REQUIRED ON EXPOSED CONCRETE SURFACES TO 1'-0" BELOW FINISHED GRADE, AS SHOWN ON THE PLANS. THE COLOR SHALL BE EQUIVALENT TO FEDERAL STANDARD 595B, COLOR NO. XXXXX (XXXX).

THE TOP OF LEVELING PAD ELEVATIONS SHOWN FOR MSE WALLS ARE THE HIGHEST ALLOWABLE ELEVATIONS. THE CONCRETE LEVELING PAD SHALL BE STEPPED TO ACCOMMODATE THE GEOMETRY OF THE FACING PANEL. IN NO CASE SHALL THE TOP OF THE LEVELING PAD BE LESS THAN 1'-6" FROM FINISHED GRADE AT THE FRONT FACE. EXCEPT AS SHOWN IN THE PLANS, THE DISTANCE TO THE TOP OF LEVELING PAD SHALL NOT BE GREATER THAN ONE HALF A PANEL HEIGHT PLUS 1'-6" FROM FINISHED GRADE AT THE FRONT FACE, OR AS SHOWN ON THE PLANS.

STATIONS, ELEVATIONS, AND DIMENSIONS CONTAINED IN THESE PLANS FOR RETAINING WALLS ARE CALCULATED FROM A RECENT FIELD SURVEY AND FROM EXISTING PLANS. THE CONTRACTOR SHALL VERIFY ALL DEPENDENT DIMENSIONS IN THE FIELD BEFORE ORDERING OR FABRICATING ANY MATERIAL.

GRADE 60 REINFORCING STEEL IS REQUIRED.

ALL REINFORCING STEEL SHALL BE EPOXY COATED UNLESS OTHERWISE NOTED.

Ⓝ DENOTES EPOXY-COATED REINFORCING STEEL.

ALL REINFORCING SHALL HAVE 2" CLEAR COVER UNLESS OTHERWISE NOTED.

THE STOCK LENGTH USED FOR ALL REINFORCING IS 60 FEET.

THE FOLLOWING TABLE GIVES THE MINIMUM CLASS B LAP SPLICE LENGTH FOR EPOXY COATED REINFORCING BARS PLACED IN ACCORDANCE WITH SUBSECTION 602.06. THESE SPLICE LENGTHS SHALL BE INCREASED BY 25% FOR BARS SPACED AT LESS THAN 6" ON CENTER.

BAR SIZE	#4	#5	#6	#7	#8	#9	#10	#11
SPLICE LENGTH FOR CLASS D CONCRETE	1'-3"	1'-7"	2'-5"	2'-10"	3'-8"	4'-8"	5'-11"	7'-3"

WHEN THE CONTRACTOR ELECTS TO SUBSTITUTE EPOXY COATED REINFORCEMENT FOR BLACK REINFORCING BARS, THE MINIMUM LAP SPLICE SHALL BE AS DESCRIBED ABOVE.

THE FOLLOWING TABLE GIVES THE MINIMUM CLASS B LAP SPLICE LENGTH FOR BLACK REINFORCING BARS PLACED IN ACCORDANCE WITH SUBSECTION 602.06. THESE SPLICE LENGTHS SHALL BE INCREASED BY 25% FOR BARS SPACED AT LESS THAN 6" ON CENTER.

BAR SIZE	#4	#5	#6	#7	#8	#9	#10	#11
SPLICE LENGTH FOR CLASS D CONCRETE	1'-1"	1'-4"	1'-7"	1'-11"	2'-6"	3'-1"	3'-11"	4'-10"

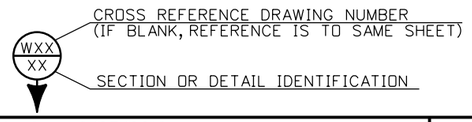

THE CONTRACTOR SHALL BE RESPONSIBLE FOR THE STABILITY OF THE STRUCTURE DURING CONSTRUCTION.

ABUT. = ABUTMENT
B.F. = BACK FACE
BOT. = BOTTOM
BRG. = BEARING
E.F. = EACH FACE
EQ. = EQUAL
F.G. = FINISHED GRADE
HCL = HORIZONTAL CONTROL LINE
I.D. = INSIDE DIAMETER
I.F. = INSIDE FACE
O.F. = OUTSIDE FACE
SPA. = SPACING
T.O. = TOP OF

THE INFORMATION SHOWN ON THESE PLANS CONCERNING THE TYPE AND LOCATION OF UNDERGROUND UTILITIES IS NOT GUARANTEED TO BE ACCURATE OR ALL INCLUSIVE. THE CONTRACTOR IS RESPONSIBLE FOR MAKING HIS OWN DETERMINATION AS TO THE TYPE AND LOCATION OF UNDERGROUND UTILITIES AS MAY BE NECESSARY TO AVOID DAMAGE THERETO. THE CONTRACTOR SHALL CONTACT THE UTILITY NOTIFICATION CENTER OF COLORADO AT 811 OR 1-800-922-1987 AT LEAST 3 DAYS (NOT INCLUDING THE DAY OF NOTIFICATION) PRIOR TO ANY EXCAVATION OR OTHER EARTHWORK.

SOIL BORING LOCATIONS ARE SHOWN IN PLAN ON WALL GENERAL LAYOUT SHEETS. ALSO SEE GEOTECHNICAL PLANS FOR BORING LOG INFORMATION.

TEMPORARY WALL NOTES

TEMPORARY WALLS (WIRE FABRIC FACED MSE WALLS) SHALL BE DESIGNED FOR THE DESIGN HEIGHTS INDICATED IN THE GENERAL LAYOUTS. DESIGNS SHALL MEET OR EXCEED THE REINFORCEMENT LENGTH (RL) AND THE LONG-TERM DESIGN STRENGTH (LTDS) REQUIREMENTS SHOWN ON SHT. W27 FOR THE CORRESPONDING DESIGN HEIGHTS (DH). LTDS VALUES ON SHT. W27 ARE BASED ON 2'-6" ON-CENTER REINFORCING STRIP SPACING, VERTICALLY. WIRE FABRIC FACING WALLS REQUIRE DESIGN BASED ON 1'-0" ON-CENTER SPACING, VERTICALLY. SEE WIRE FABRIC FACING DETAIL, SHT. WXX.

INTERIM ROADWAY DRAINAGE DESIGN AT TEMPORARY WALLS SHALL BE THE RESPONSIBILITY OF THE CONTRACTOR.

SEE PROJECT SPECIAL PROVISIONS, REVISION OF SECTION 206 AND 504, WIRE FABRIC FACED MSE WALLS.

FOR BURIED UTILITY INFORMATION
THREE (3) BUSINESS DAYS BEFORE YOU DIG
CALL 811
(or 1-800-922-1987)
UTILITY NOTIFICATION CENTER OF COLORADO (UNCC)
www.uncc.org

INDEX OF DRAWINGS

W1	GENERAL INFORMATION - RETAINING WALLS
W2	DESIGN DATA & WALL DESCRIPTIONS
W3	SUMMARY OF QUANTITIES - PERMANENT WALLS
W4	SUMMARY OF QUANTITIES - SHORING & TEMPORARY WALLS
W5	TYPICAL SECTIONS (1 OF 3)
W6	TYPICAL SECTIONS (2 OF 3)
W7	TYPICAL SECTIONS (3 OF 3)
W8	RETAINING WALL HCL GEOMETRIC PLAN
W9	RETAINING WALL HORIZONTAL CONTROL LINE DATA
W10	RETAINING WALL TOP OF WALL ELEVATIONS (1 OF 2)
W11	RETAINING WALL TOP OF WALL ELEVATIONS (2 OF 2)
W12	RAMP 2 WALL GENERAL LAYOUT (1 OF 3)
W13	RAMP 2 WALL GENERAL LAYOUT (2 OF 3)
W14	RAMP 2 WALL GENERAL LAYOUT (3 OF 3)
W15	I-25 NB WALL 1 GENERAL LAYOUT
W16	I-25 SB WALL 1 GENERAL LAYOUT (1 OF 2)
W17	I-25 SB WALL 1 GENERAL LAYOUT (2 OF 2)
W18	I-25 SB WALL 1B & I-25 NB WALL 1B GENERAL LAYOUT
W19	I-25 NB WALL 2 GENERAL LAYOUT
W20	I-25 SB WALL 2 GENERAL LAYOUT (1 OF 2)
W21	I-25 SB WALL 2 GENERAL LAYOUT (2 OF 2)
W22	I-25 SB WALL 2B & I-25 NB WALL 2B GENERAL LAYOUT
W23	RAMP 1 WALL 2 GENERAL LAYOUT
W24	RAMP 1 WALL 3 GENERAL LAYOUT
W25	RAMP 1 WAL 3B & WALL 4 GENERAL LAYOUT
W26	MSE WALL DETAILS (1 OF 4)
W27	MSE WALL DETAILS (2 OF 4)
W28	MSE WALL DETAILS (3 OF 4)
W29	MSE WALL DETAILS (4 OF 4)
W30	RAIL SLAB DETAILS DETAILS
W31	BRIDGE RAIL TYPE 7
W32	RAIL SLAB AT DRAINAGE INLET
W33	SIGNAL POLE BASE DETAILS
W34	SANTA FE BRIDGE ABUTMENT CORNER DETAILS
W35	RAMP 1 FLYOVER ABUTMENT 1 INTERFACE DETAILS
W36	RAMP 1 FLYOVER ABUTMENT 12 CORNER DETAILS
W37	CHAIN LINK FENCE (SPECIAL)(36 INCH SPLASH GUARD)
W38	RAIL MOUNTED SIGN DETAILS
W39	PERMANENT WALL EXCAVATION & BACKFILL DETAILS
W40	SHORING HCL GEOMETRIC PLAN & HORIZONTAL CONTROL LINE DATA
W41	SHORING (AREA 1) GENERAL LAYOUT (1 OF 2)
W42	SHORING (AREA 1) GENERAL LAYOUT (2 OF 2)
W43	TEMPORARY WALL TYPICAL SECTIONS
W44	TEMPORARY WALL HCL GEOMETRIC PLAN
W45	TEMPORARY WALL HORIZONTAL CONTROL LINE DATA
W46	TEMPORARY WALL TOP OF WALL ELEVATIONS (1 OF 2)
W47	TEMPORARY WALL TOP OF WALL ELEVATIONS (2 OF 2)
W48	TEMPORARY WALL A GENERAL LAYOUT (1 OF 2)
W49	TEMPORARY WALL A GENERAL LAYOUT (2 OF 2)
W50	TEMPORARY WALL B GENERAL LAYOUT
W51	TEMPORARY WALL C GENERAL LAYOUT
W52	TEMPORARY WALL D GENERAL LAYOUT (1 OF 3)
W53	TEMPORARY WALL D GENERAL LAYOUT (2 OF 3)
W54	TEMPORARY WALL D GENERAL LAYOUT (2 OF 3)
W55	TEMPORARY WALLS E & F GENERAL LAYOUT
W56	TEMPORARY WALL G GENERAL LAYOUT (I OF 2)
W57	TEMPORARY WALL G GENERAL LAYOUT (2 OF 2)
W58	TEMPORARY WALL H GENERAL LAYOUT
W59	TEMPORARY WALL DETAILS
W60	TEMPORARY WALL EXCAVATION & BACKFILL DETAILS (1 OF 2)
W61	TEMPORARY WALL EXCAVATION & BACKFILL DETAILS (2 OF 2)
W62	BORING LOG INFORMATION

Revision Dates (Preliminary Stage Only)

Design			Detail			Quantities		
Designed By	INITIAL	DATE	Detailed By	INITIAL	DATE	Quantities By	INITIAL	DATE
Checked By	PRS	03/10	Checked By	RAD	03/10	Checked By		

Print Date: 9/27/2010
File Name: 16311WALL_PH2_GenInfo.dgn
Horiz. Scale: 1:1 Vert. Scale: As Noted
Unit Information Unit Leader Initials

FELSBURG HOLT & ULLEVIG 6300 South Syracuse Way Centennial, CO 80111 25 years of engineering paths to transportation solutions

Sheet Revisions		
Date:	Comments	Init.

Colorado Department of Transportation
2000 South Holly Street
Denver, CO 80222
Phone: 303-972-9112 FAX: 303-972-9114
Region 6 RLB

As Constructed
No Revisions:
Revised:
Void:

I-25/SANTA FE INTERCHANGE
GENERAL INFORMATION
RETAINING WALLS

Designer: P. STEIN
Detailer: R. DILLON
Sheet Subset: WALL
Structure Numbers: MULTIPLE
Subset Sheets: W1 of XX

Project No./Code: IM 0254-394
16311
Sheet Number 183

Ricdi 4:01:44 PM K:\08276\16311\Phase 2\Bridge\Drawings\16311WALL_PH2_GenInfo.dgn
9/27/2010 CDOT-PDFDraftQuality_XM.pltcfg CDOT-PenTable.tbl

WALL DESCRIPTIONS

RAMP 2 WALL - STR NO. WALL-F-16-DS

PRECAST CONCRETE PANEL FACED MSE WALL
WITH BRIDGE RAIL SLAB & BRIDGE RAIL TYPE 7

LENGTH ALONG WALL HCL = XX'-XX"
HEIGHT VARIES FROM X'-X" TO XX'-X"

LOCATED ALONG EAST SIDE OF I-25 & RAMP 2
NORTH OF BROADWAY VIADUCT

I-25 NB WALL 1 - STR. NO. WALL-F-17-DW

PRECAST CONCRETE PANEL FACED MSE WALL
WITH BRIDGE RAIL SLAB & BRIDGE RAIL TYPE 7

LENGTH ALONG WALL HCL = XX'-XX"
HEIGHT VARIES FROM X'-X" TO XX'-X"

LOCATED ALONG EAST SIDE OF I-25
SOUTH OF SANTA FE

I-25 SB WALL 1 - STR. NO. WALL-F-17-DW

PRECAST CONCRETE PANEL FACED MSE WALL
WITH BRIDGE RAIL SLAB & BRIDGE RAIL TYPE 7

LENGTH ALONG WALL HCL = XX'-XX"
HEIGHT VARIES FROM X'-X" TO XX'-X"

LOCATED ALONG WEST SIDE OF I-25
SOUTH OF SANTA FE

I-25 NB WALL 2 - STR. NO. WALL-F-17-DX

PRECAST CONCRETE PANEL FACED MSE WALL
WITH BRIDGE RAIL SLAB & BRIDGE RAIL TYPE 7

LENGTH ALONG WALL HCL = XX'-XX"
HEIGHT VARIES FROM X'-X" TO XX'-X"

LOCATED ALONG EAST SIDE OF I-25
NORTH OF SANTA FE

I-25 SB WALL 2 - STR. NO. WALL-F-17-DX

PRECAST CONCRETE PANEL FACED MSE WALL
WITH BRIDGE RAIL SLAB & BRIDGE RAIL TYPE 7

LENGTH ALONG WALL HCL = XX'-XX"
HEIGHT VARIES FROM X'-X" TO XX'-X"

LOCATED ALONG WEST SIDE OF I-25
NORTH OF SANTA FE

RAMP 1 WALL 2 - STR. NO. WALL-F-17-DU

PRECAST CONCRETE PANEL FACED MSE WALL
WITH BRIDGE RAIL SLAB & BRIDGE RAIL TYPE 7

LENGTH ALONG WALL HCL = XX'-XX"
HEIGHT VARIES FROM X'-X" TO XX'-X"

LOCATED ALONG WEST SIDE OF RAMP 1
WEST OF I-25 AT RAMP 1 BRIDGE ABUT. 1

RAMP 1 WALL 3 - STR. NO. WALL-F-17-DV

PRECAST CONCRETE PANEL FACED MSE WALL
WITH BRIDGE RAIL SLAB & BRIDGE RAIL TYPE 7

LENGTH ALONG WALL HCL = XX'-XX"
HEIGHT VARIES FROM X'-X" TO XX'-X"

LOCATED ALONG EAST SIDE OF RAMP 1
EAST OF I-25 AT RAMP 1 BRIDGE ABUT. XXXXXX

RAMP 1 WALL 4- STR NO. WALL-F-16-DV

PRECAST CONCRETE PANEL FACED MSE WALL
WITH BRIDGE RAIL SLAB & BRIDGE RAIL TYPE 7

LENGTH ALONG WALL HCL = XX'-XX"
HEIGHT VARIES FROM X'-X" TO XX'-X"

LOCATED ALONG WEST SIDE OF RAMP 1
EAST OF I-25 AT RAMP 1 BRIDGE ABUT. XXXXXX

TEMPORARY (WIRE FABRIC FACED) WALL DESCRIPTIONS

TEMPORARY WALL A

MECHANICALLY STABILIZED EARTH (MSE)
WITH WIRE FABRIC FACING

LENGTH ALONG WALL HCL = XX'-XX"
HEIGHT VARIES FROM X'-X" TO XX'-X"

LOCATED XXXX
XXXX

TEMPORARY WALL B

MECHANICALLY STABILIZED EARTH (MSE)
WITH WIRE FABRIC FACING

LENGTH ALONG WALL HCL = XX'-XX"
HEIGHT VARIES FROM X'-X" TO XX'-X"

LOCATED XXXX
XXXX

TEMPORARY WALL C

MECHANICALLY STABILIZED EARTH (MSE)
WITH WIRE FABRIC FACING

LENGTH ALONG WALL HCL = XX'-XX"
HEIGHT VARIES FROM X'-X" TO XX'-X"

LOCATED XXXX
XXXX

TEMPORARY (WIRE FABRIC FACED) WALL DESCRIPTIONS (Continued)

TEMPORARY WALL D

MECHANICALLY STABILIZED EARTH (MSE)
WITH WIRE FABRIC FACING

LENGTH ALONG WALL HCL = XX'-XX"
HEIGHT VARIES FROM X'-X" TO XX'-X"

LOCATED XXXX
XXXX

TEMPORARY WALL E

MECHANICALLY STABILIZED EARTH (MSE)
WITH WIRE FABRIC FACING

LENGTH ALONG WALL HCL = XX'-XX"
HEIGHT VARIES FROM X'-X" TO XX'-X"

LOCATED XXXX
XXXX

TEMPORARY WALL F

MECHANICALLY STABILIZED EARTH (MSE)
WITH WIRE FABRIC FACING

LENGTH ALONG WALL HCL = XX'-XX"
HEIGHT VARIES FROM X'-X" TO XX'-X"

LOCATED XXXX
XXXX

TEMPORARY WALL G

MECHANICALLY STABILIZED EARTH (MSE)
WITH WIRE FABRIC FACING

LENGTH ALONG WALL HCL = XX'-XX"
HEIGHT VARIES FROM X'-X" TO XX'-X"

LOCATED XXXX
XXXX

TEMPORARY WALL H

MECHANICALLY STABILIZED EARTH (MSE)
WITH WIRE FABRIC FACING

LENGTH ALONG WALL HCL = XX'-XX"
HEIGHT VARIES FROM X'-X" TO XX'-X"

LOCATED XXXX
XXXX

DESIGN DATA - MSE RETAINING WALLS

AASHTO, 16TH EDITION, AS AMENDED BY 1997, 1998, 1999 AND
2000 INTERIM REVISIONS.

DESIGN METHOD:
SERVICE LOAD DESIGN - (MECHANICALLY STABILIZED EARTH WALLS)

DESIGN LOADS (MECHANICALLY STABILIZED EARTH WALLS):

UNIT WEIGHT OF CONCRETE = 150 pcf
VERTICAL EARTH LOAD = 125 pcf
EQUIVALENT FLUID PRESSURE = 35 pcf
LIVE LOAD SURCHARGE = 2'-0" OF SOIL
VEHICULAR HORIZONTAL IMPACT = 10 kip

FACTORS OF SAFETY FOR STATIC LOADING CONDITIONS (ALL WALLS):

SLIDING = 1.5
OVERTURNING = 2
PULLOUT = 1.5

FOUNDATION SOILS:

ø VARIES, SEE SOIL REPORT (ANGLE OF INTERNAL FRICTION)
ALLOWABLE BEARING = (2 + 0.2 * B) ksf, WHERE B IS
THE FOOTING WIDTH IN FEET.

BACKFILL (CLASS 1) (ALL WALLS):

ø = 34°
Ka = 0.283

REINFORCED CONCRETE:

CONCRETE CLASS D (WALL): f'c = 4500 psi
REINFORCING STEEL: fy = 60,000 psi

ALLOWABLE BEARING ON FOUNDATION SOILS

	ALLOWABLE BEARING	ESTIMATED SETTLEMENT
DH ≤ L 10 FT.	2.0 KSF	0.5 IN.
10 FT. < DH ≤ L 15 FT.	3.0 KSF	1.0 IN.
15 FT. < DH ≤ L 20 FT.	3.8 KSF	1.5 IN.
20 FT. < DH ≤ L 25 FT.	4.5 KSF	2.1 IN.
25 FT. < DH ≤ L 30 FT.	5.3 KSF	2.8 IN.
30 FT. < DH ≤ L 35 FT.	6.0 KSF	3.5 IN.

Revision Dates (Preliminary Stage Only)

Design	INITIAL	DATE
Designed By	PRS	03/10
Checked By		

Detail	INITIAL	DATE
Detailed By	RAD	03/10
Checked By		

Quantities	INITIAL	DATE
Quantities By		
Checked By		

Ricdi 4:01:50 PM K:\08276\16311\Phase 2\Bridge\Drawings\16311WALL_PH2_DesignData.dgn
9/27/2010 CDOT-PDFDraftQuality_XM.pltcfg CDOT-PenTable.tbl

Print Date: 9/27/2010
File Name: 16311WALL_PH2_DesignData.dgn
Horiz. Scale: 1:1 Vert. Scale: As Noted
Unit Information Unit Leader Initials

Summit Engineering Group, Inc. 5401 South Syracuse Way, Suite 330 Greenwood Village, Colorado 80111 303.721.1440 www.summitengineering.com
Civil, Structural, Transportation, Water Resources, Environmental
Strategic engineering paths to transportation solutions

Sheet Revisions

Date:	Comments	Init.

Colorado Department of Transportation
DEPARTMENT OF TRANSPORTATION
2000 South Holly Street
Denver, CO 80222
Phone: 303-972-9112 FAX: 303-972-9114
Region 6 RLB

As Constructed
No Revisions:
Revised:
Void:

I-25/SANTA FE INTERCHANGE
DESIGN DATA
& WALL DESCRIPTIONS

Designer: P. STEIN
Detailer: R. DILLON
Sheet Subset: WALL
Structure Numbers: MULTIPLE
Subset Sheets: W2 of X

Project No./Code
IM 0254-394
16311
Sheet Number 184

SUMMARY OF QUANTITIES

ITEM NO.	DESCRIPTION	UNIT	RAMP 2 WALL WALL-F-17-DS	I-25 NB WALL 1 WALL-F-16-DW	I-25 SB WALL 1 WALL-F-16-DW	I-25 SB WALL 2 WALL-F-17-DX	I-25 / RAMP 1 WALL WALL-F-17-DV	RAMP 1 WALL 1 WALL-F-17-DU	RAMP 1 WALL 2 WALL-F-17-DU	RAMP 1 WALL 3 WALL-F-17-DV	
206	STRUCTURE EXCAVATION	CY									0
206	STRUCTURE BACKFILL (CLASS 1)	CY									0
206	MECHANICAL REINFORCEMENT OF SOIL	CY									0
304	AGGREGATE BASE COURSE (CLASS 6)	CY									0
504	PRECAST PANEL FACING	SF									0
601	CONCRETE CLASS D (WALL)	CY									0
601	STRUCTURAL CONCRETE STAIN	SY									0
601	STRUCTURAL CONCRETE COATING (ANTI-GRAFFITTI)	SF									0
602	REINFORCING STEEL	LB									0
602	REINFORCING STEEL (EPOXY COATED)	LB									0
605	GEOCOMPOSITE DRAIN WITH PIPE	SY									0
606	BRIDGE RAIL TYPE 7 (SPECIAL)	LF									0
(1) 606	GUARDRAIL TYPE 7 (STYLE CD)	LF									0
607	FENCE CHAIN LINK (SPECIAL) (36 INCH)	LF									0
613	1 INCH ELECTRICAL CONDUIT	LF									0
613	2 INCH ELECTRICAL CONDUIT	LF									0

(1) For Information only, see Roadway Plans for tabulation

Revision Dates (Preliminary Stage Only)

Quantities: INITIAL DATE; Quantities By; Checked By
Detail: INITIAL RAD DATE 09/10; Detailed By; Checked By
Design: INITIAL PRS DATE 09/10; Designed By; Checked By

Ricdi 4:01:55 PM K:\08276\16311\Phase 2\Bridge\Drawings\16311WALL_PH2_Quantities01.dgn
9/27/2010 CDOT-PDFDraftQuality_XM.pltcfg CDOT-PenTable.tbl

Print Date: 9/27/2010
File Name: 16311WALL_PH2_Quantities01.dgn
Horiz. Scale: 1:1 Vert. Scale: As Noted
Unit Information Unit Leader Initials

FELSBURG HOLT & ULLEVIG 6300 South Syracuse Way Centennial, CO 80111 25 years of engineering paths to transportation solutions

Sheet Revisions

Date:	Comments	Init.

Colorado Department of Transportation
DEPARTMENT OF TRANSPORTATION
2000 South Holly Street
Denver, CO 80222
Phone: 303-972-9112 FAX: 303-972-9114
Region 6 RLB

As Constructed
No Revisions:
Revised:
Void:

I-25/SANTA FE INTERCHANGE
SUMMARY OF QUANTITIES

Designer: P. STEIN
Detailer: R. DILLON
Sheet Subset: WALL
Structure Numbers: MULTIPLE
Subset Sheets: W3 of X

Project No./Code
IM 0254-394
16311
Sheet Number 185

SUMMARY OF QUANTITIES - SHORING & TEMPORARY WALLS

ITEM NO.	DESCRIPTION	UNIT	TEMPORARY WALL A	TEMPORARY WALL B	TEMPORARY WALL C	TEMPORARY WALL D	TEMPORARY WALL E	TEMPORARY WALL F	TEMPORARY WALL G	TEMPORARY WALL H	
202	REMOVAL OF WALL	LS							0.5	0.5	1
206	STRUCTURE EXCAVATION	CY									0
206	STRUCTURE BACKFILL (CLASS 1)	CY									0
(1) 206	MECHANICAL REINFORCEMENT OF SOIL	CY									0
206	SHORING (AREA 1)	LS									0
304	AGGREGATE BASE COURSE (CLASS 6)	CY									0
504	SHORING (AREA 2)	LS									0
504	SHORING (AREA 3)	LS									0
504	FACING (SPECIAL)	SF									0

(1) The amount of Wire Fabric Facing for each of the Temporay Walls is provided for information only. The cost of the Wire Fabric Facing shall be included in Item 206 - Mechanical Reinforcemnet of Soil:

Temporary Wall A has approximately xxxx sf of Wire Fabric Facing
Temporary Wall B has approximately xxxx sf of Wire Fabric Facing
Temporary Wall C has approximately xxxx sf of Wire Fabric Facing
Temporary Wall D has approximately xxxx sf of Wire Fabric Facing
Temporary Wall E has approximately xxxx sf of Wire Fabric Facing
Temporary Wall F has approximately xxxx sf of Wire Fabric Facing
Temporary Wall G has approximately xxxx sf of Wire Fabric Facing
Temporary Wall H has approximately xxxx sf of Wire Fabric Facing

Revision Dates (Preliminary Stage Only)

Quantities: INITIAL, DATE, Quantities By, Checked By
Detail: INITIAL RAD, DATE 09/10, Detailed By, Checked By
Design: Designed By, Checked By; INITIAL PRS, DATE 09/10

Ricdil 4:29:51 PM K:\08276\16311\Phase 2\Bridge\Drawings\16311WALL_PH2_Quantities02.dgn
9/27/2010 CDOT-PDFDraftQuality_XM.pltcfg CDOT-PenTable.tbl

Print Date: 9/27/2010
File Name: 16311WALL_PH2_Quantities02.dgn
Horiz. Scale: 1:1 Vert. Scale: As Noted
Unit Information Unit Leader Initials

Parsons Brinckerhoff
Summit Technical Resources, Inc.
1550 South Syracuse Way
Denver, CO 80231
Phone: 303-369-1999 Fax: 303-369-1998
Bringing clarity to complex engineering paths to transportation solutions

Sheet Revisions		
Date:	Comments	Init.

Colorado Department of Transportation
2000 South Holly Street
Denver, CO 80222
Phone: 303-972-9112 FAX: 303-972-9114
Region 6 RLB

As Constructed
No Revisions:
Revised:
Void:

I-25/SANTA FE INTERCHANGE
SUMMARY OF QUANTITIES
SHORING & TEMPORARY WALLS

Designer: P. STEIN
Detailer: R. DILLON
Sheet Subset: WALL
Structure Numbers:
Subset Sheets: W4 of X

Project No./Code
IM 0254-394
16311
Sheet Number 186

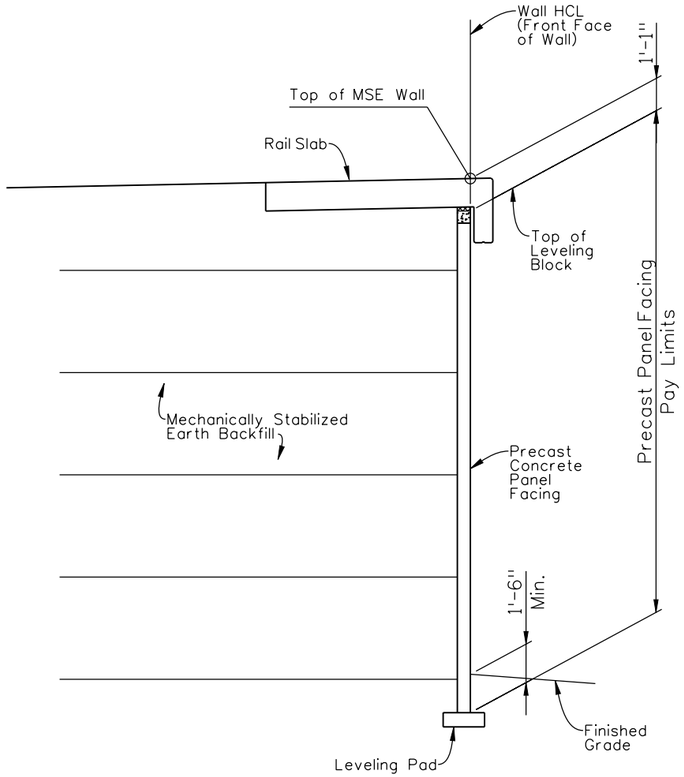

MSE RETAINING WALL PAY LIMITS

The Top of Leveling Pad elevations shown on the General Layouts are the highest allowable elevations. The wall system manufacturer may revise these elevations, but must satisfy the minimum earth cover requirement.

I-25 SB WALL 1B, I-25 NB WALL 1B, I-25 SB WALL 2B & I-25 NB WALL 2B

Revision Dates (Preliminary Stage Only)

MM/YY								

Design			Detail			Quantities		
	INITIAL	DATE		INITIAL	DATE		INITIAL	DATE
Designed By	KMA	09/10	Detailed By	RAD	09/10	Quantities By		
Checked By			Checked By			Checked By		

Print Date: 9/27/2010	Sheet Revisions		
File Name: 16311WALL_PH2_TypSections01.dgn	Date:	Comments	Init.
Horiz. Scale: 1:1 Vert. Scale: As Noted			
Unit Information Unit Leader Initials			
FELSBURG HOLT & ULLEVIG 6300 South Syracuse Way Centennial, CO 80111			

Colorado Department of Transportation
2000 South Holly Street
Denver, CO 80222
Phone: 303-972-9112 FAX: 303-972-9114
Region 6 RLB

As Constructed	I-25/SANTA FE INTERCHANGE			Project No./Code
No Revisions:	TYPICAL WALL SECTIONS (1 OF 3)			IM 0254-394
Revised:	Designer: P. STEIN	Structure Numbers	MULTIPLE	16311
Void:	Detailer: R. DILLON			
	Sheet Subset: WALL	Subset Sheets: W5 of X		Sheet Number 187

Ricdil 4:02:07 PM K:\08276\16311\Phase 2\Bridge\Drawings\16311WALL_PH2_TypSections01.dgn
9/27/2010 CDOT-PDFDraftQuality_XM.pltcfg CDOT-PenTable.tbl

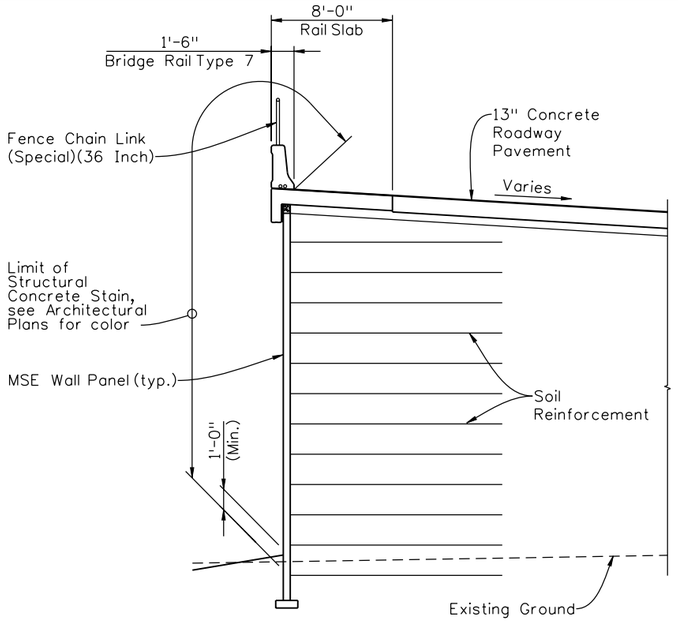

I-25 SB WALL 1
(Shown at I-25 Sta. 628+00.00)

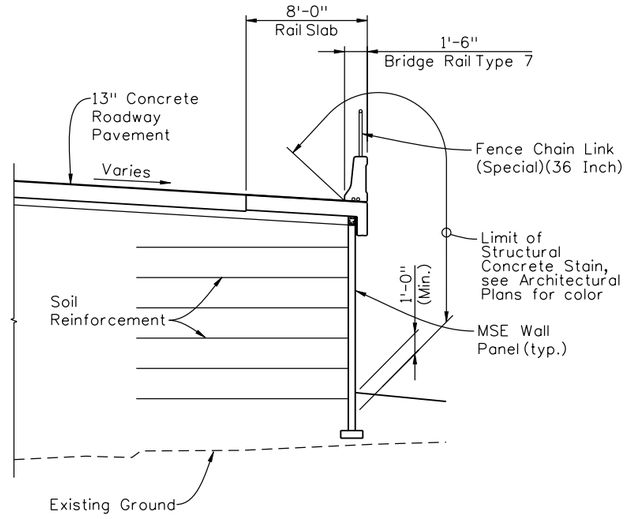

I-25 NB WALL 1
(Shown at I-25 Sta. 628+00.00)

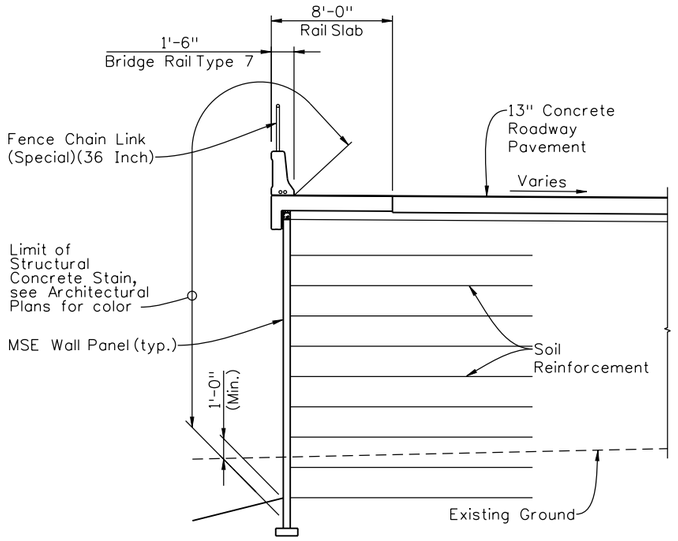

I-25 SB WALL 2
(Shown at I-25 Sta. 637+50.00)

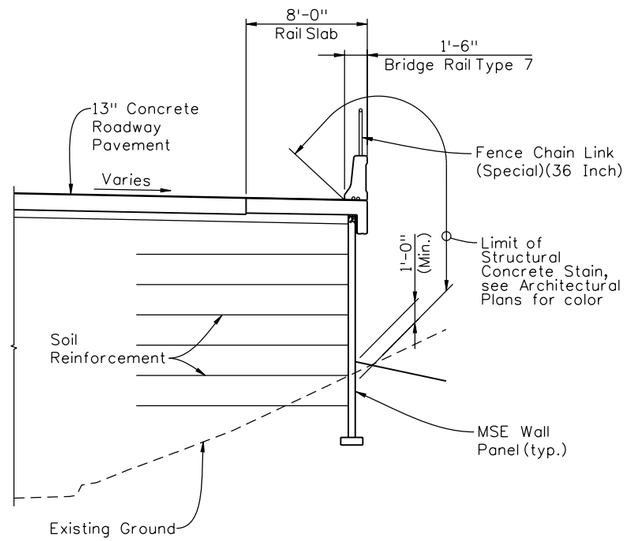

I-25 NB WALL 2
(Shown at I-25 Sta. 637+50.00)

Print Date: 9/27/2010
File Name: 16311WALL_PH2_TypSections01.dgn
Horiz. Scale: 1:1 Vert. Scale: As Noted
Unit Information Unit Leader Initials

FELSBURG HOLT & ULLEVIG 6300 South Syracuse Way Centennial, CO 80111

Sheet Revisions

Date:	Comments	Init.

Colorado Department of Transportation
DEPARTMENT OF TRANSPORTATION
2000 South Holly Street
Denver, CO 80222
Phone: 303-972-9112 FAX: 303-972-9114
Region 6 RLB

As Constructed
No Revisions:
Revised:
Void:

I-25/SANTA FE INTERCHANGE
TYPICAL WALL SECTIONS (2 OF 3)

Designer:	P. STEIN	Structure Numbers	MULTIPLE
Detailer:	R. DILLON		
Sheet Subset:	WALL	Subset Sheets:	W6 of X

Project No./Code
IM 0254-394
16311
Sheet Number 188

Design: Designed By INITIAL KMA DATE 09/10; Detailed By Checked By
Detail: INITIAL RAD DATE 09/10; Checked By
Quantities: INITIAL DATE; Quantities By Checked By

Revision Dates (Preliminary Stage Only): MM/YY

R:\cdi 4:02:11 PM K:\08276\16311\Phase 2\Bridge\Drawings\16311WALL_PH2_TypSections01.dgn
9/27/2010 CDOT-PDFDraftQuality_XM.pltcfg CDOT-PenTable.tbl

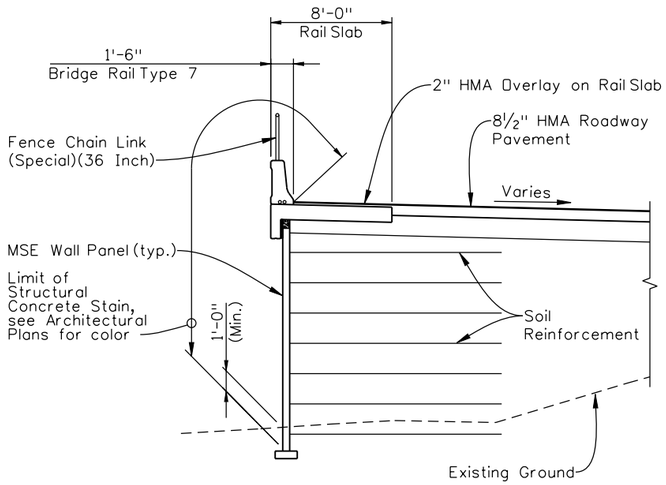

RAMP 1 WALL 2

(Shown at Ramp 1 Sta. 111+00)

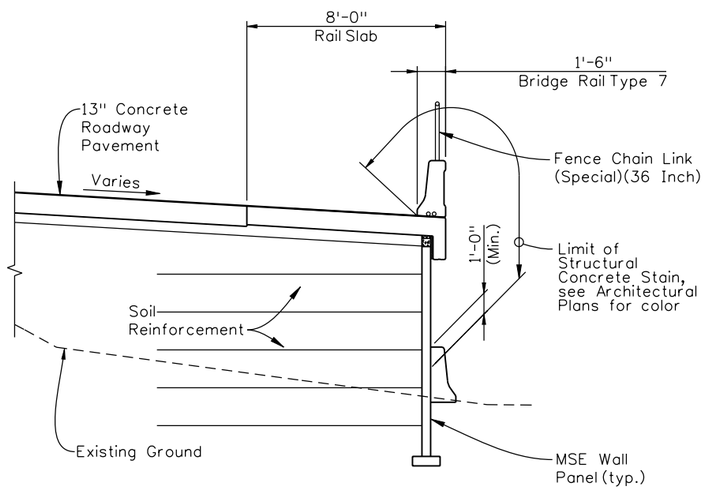

RAMP 2 WALL

(Shown at Ramp 2 Sta. 202+00)

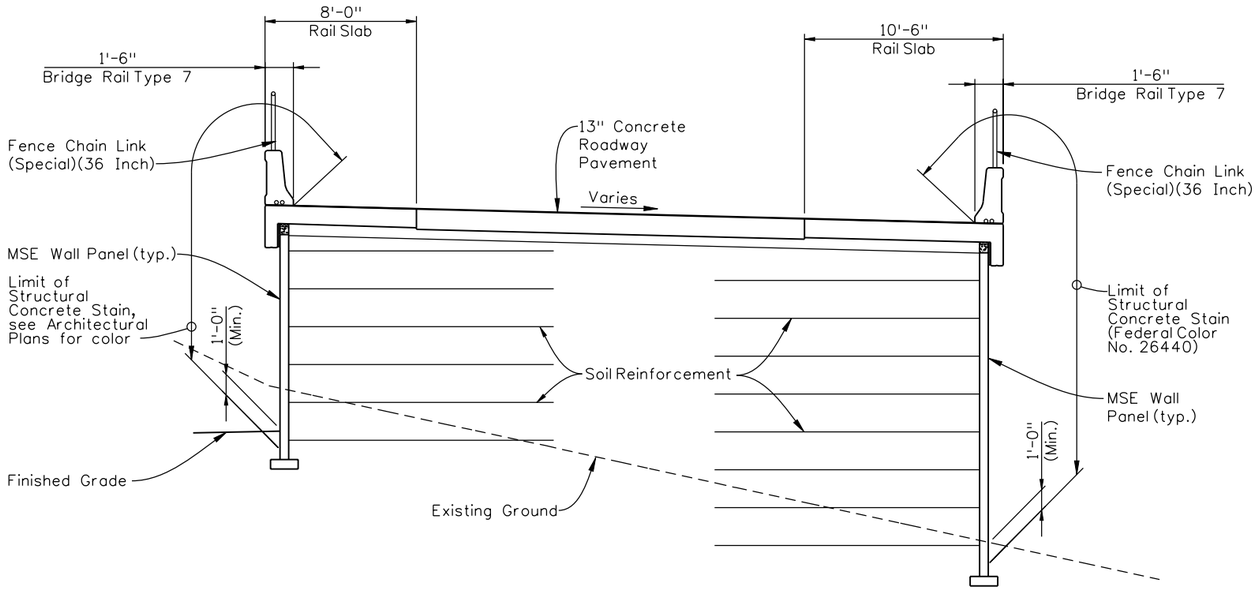

RAMP 1 WALL 4

(Shown at Ramp 1 Sta. 130+00)

RAMP 1 WALL 3

(Shown at Ramp 1 Sta. 130+00)

RAMP 1 WALL 3B

(At Ramp 1 Flyover Bridge Abutment 12)

Revision Dates (Preliminary Stage Only)

MM/YY

Design	INITIAL	DATE
Designed By	KMA	09/10
Checked By		

Detail	INITIAL	DATE
Detailed By	RAD	09/10
Checked By		

Quantities	INITIAL	DATE
Quantities By		
Checked By		

Ricdil 4:02:15 PM K:\08276\16311\Phase 2\Bridge\Drawings\16311WALL_PH2_TypSections01.dgn
9/27/2010 CDOT-PDFDraftQuality_XM.pltcfg CDOT-PenTable.tbl

Print Date: 9/27/2010
File Name: 16311WALL_PH2_TypSections01.dgn
Horiz. Scale: 1:1 Vert. Scale: As Noted
Unit Information Unit Leader Initials

FELSBURG HOLT & ULLEVIG 6300 South Syracuse Way Centennial, CO 80111

Sheet Revisions		
Date:	Comments	Init.

Colorado Department of Transportation
DEPARTMENT OF TRANSPORTATION
2000 South Holly Street
Denver, CO 80222
Phone: 303-972-9112 FAX: 303-972-9114
Region 6 RLB

As Constructed
No Revisions:
Revised:
Void:

I-25/SANTA FE INTERCHANGE
TYPICAL WALL SECTIONS (3 OF 3)

Designer:	P. STEIN	Structure Numbers	MULTIPLE
Detailer:	R. DILLON		
Sheet Subset:	WALL	Subset Sheets:	W7 of X

Project No./Code
IM 0254-394
16311
Sheet Number 189

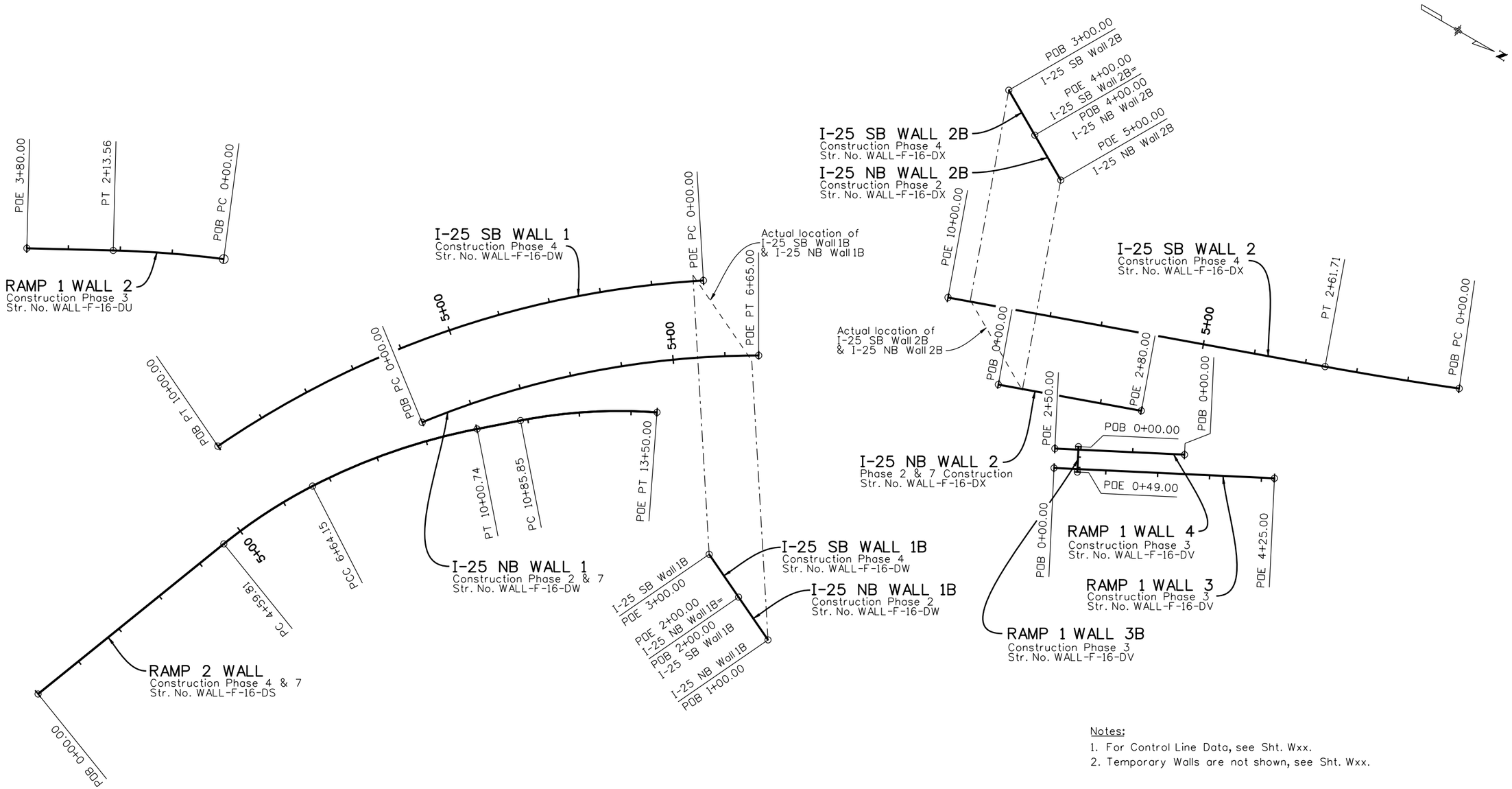

Notes:

1. For Control Line Data, see Sht. Wxx.
2. Temporary Walls are not shown, see Sht. Wxx.

Revision Dates	(Preliminary Stage Only)

Quantities	INITIAL	DATE
Quantities By		
Checked By		

Detail	INITIAL	DATE
Detailed By	RAD	03/10
Checked By		

Design	INITIAL	DATE
Designed By	PRS	03/10
Checked By		

Ricdil 4:02:20 PM K:\08276\16311\Phase 2\Bridge\Drawings\16311WALL_PH2_WallGeom01.dgn
9/27/2010 CDOT-PDFDraftQuality_XM.pltcfg CDOT-PenTable.tbl

Print Date: 9/27/2010
File Name: 16311WALL_PH2_WallGeom01.dgn
Horiz. Scale: 1:200 Vert. Scale: As Noted
Unit Information Unit Leader Initials

FELSBURG HOLT & ULLEVIG
6300 South Syracuse Way
Centennial, CO 80111
25 years of engineering paths to transportation solutions

Sheet Revisions		
Date:	Comments	Init.

Colorado Department of Transportation
DEPARTMENT OF TRANSPORTATION
2000 South Holly Street
Denver, CO 80222
Phone: 303-972-9112 FAX: 303-972-9114
Region 6 RLB

As Constructed
No Revisions:
Revised:
Void:

I-25/SANTA FE INTERCHANGE
RETAINING WALL HCL
GEOMETRIC PLAN

Designer:	P. STEIN	Structure Numbers	MULTIPLE
Detailer:	R. DILLON		
Sheet Subset:	WALL	Subset Sheets:	W8 of X

Project No./Code
IM 0254-394
16311
Sheet Number 190

Design				Detail				Quantities			
	INITIAL	DATE			INITIAL	DATE		INITIAL	DATE
Designed By	PRS	03/10	Detailed By		RAD	03/10	Quantities By		
Checked By			Checked By				Checked By		

Revision Dates (Preliminary Stage Only)

IN PROGRESS

Print Date: 9/27/2010	Sheet Revisions		
File Name: 16311WALL_PH2_WallGeom02.dgn	Date:	Comments	Init.
Horiz. Scale: 1:1 Vert. Scale: As Noted			
Unit Information Unit Leader Initials			
FELSBURG HOLT & ULLEVIG 6300 South Syracuse Way Centennial, CO 80111 25 years of engineering paths to transportation solutions			

Colorado Department of Transportation
DEPARTMENT OF TRANSPORTATION
2000 South Holly Street
Denver, CO 80222
Phone: 303-972-9112 FAX: 303-972-9114
Region 6 RLB

As Constructed	
No Revisions:	
Revised:	
Void:	

I-25/SANTA FE INTERCHANGE
RETAINING WALL
HORIZONTAL CONTROL LINE DATA

Designer:	P. STEIN	Structure Numbers	MULTIPLE
Detailer:	R. DILLON		
Sheet Subset:	WALL	Subset Sheets:	W9 of XX

Project No./Code	
IM 0254-394	
16311	
Sheet Number	191

R:\cdi 4:02:25 PM K:\08276\16311\Phase 2\Bridge\Drawings\16311WALL_PH2_WallGeom02.dgn
9/27/2010 CDOT-PDFDraftQuality_XML.pltcfg CDOT-PenTable.tbl

Design

	INITIAL	DATE
Designed By	PRS	10/10
Checked By		

Detail

	INITIAL	DATE
Detailed By	RAD	10/10
Checked By		

Quantities

	INITIAL	DATE
Quantities By		
Checked By		

Revision Dates (Preliminary Stage Only)

Rev.									

IN PROGRESS

Print Date: 9/27/2010		Sheet Revisions			Colorado Department of Transportation
File Name: 16311WALL_PH2_WallElevs.dgn		Date:	Comments	Init.	2000 South Holly Street Denver, CO 80222 Phone: 303-972-9112 FAX: 303-972-9114
Horiz. Scale: 1:1 Vert. Scale: As Noted					Region 6 RLB
Unit Information Unit Leader Initials					
FELSBURG HOLT & ULLEVIG 6300 South Syracuse Way Centennial, CO 80111 25 years of engineering paths to transportation solutions					

As Constructed	I-25/SANTA FE INTERCHANGE RETAINING WALL TOP OF WALL ELEVATIONS (1 OF 2)			Project No./Code
No Revisions:	Designer: P. STEIN	Structure Numbers	MULTIPLE	IM 0254-394
Revised:	Detailer: R. DILLON			16311
Void:	Sheet Subset: WALL	Subset Sheets: W10 of XX		Sheet Number 192

Ricdi 4:02:29 PM K:\08276\16311\Phase 2\Bridge\Drawings\16311WALL_PH2_WallElevs.dgn
9/27/2010 CDOT-PDFDraftQuality_XM.pltcfg CDOT-PenTable.tbl

Design				Detail				Quantities			
	INITIAL	DATE			INITIAL	DATE		INITIAL	DATE
Designed By	PRS	10/10	Detailed By	RAD	10/10	Quantities By			
Checked By			Checked By			Checked By			

Revision Dates (Preliminary Stage Only)

IN PROGRESS

Print Date: 9/27/2010	Sheet Revisions		
File Name: 16311WALL_PH2_WallElevs.dgn	Date:	Comments	Init.
Horiz. Scale: 1:1 Vert. Scale: As Noted			
Unit Information Unit Leader Initials			
FELSBURG HOLT & ULLEVIG 6300 South Syracuse Way Centennial, CO 80111 25 years of engineering paths to transportation solutions			

Colorado Department of Transportation
DEPARTMENT OF TRANSPORTATION
2000 South Holly Street
Denver, CO 80222
Phone: 303-972-9112 FAX: 303-972-9114
Region 6 RLB

As Constructed
No Revisions:
Revised:
Void:

I-25/SANTA FE INTERCHANGE
RETAINING WALL
TOP OF WALL ELEVATIONS (2 OF 2)

Designer: P. STEIN
Detailer: R. DILLON
Sheet Subset: WALL
Structure Numbers: MULTIPLE
Subset Sheets: W11 of XX

Project No./Code
IM 0254-394
16311
Sheet Number 193

Ricdi 4:02:32 PM K:\08276\16311\Phase 2\Bridge\Drawings\16311WALL_PH2_WallElevs.dgn
9/27/2010 CDOT-PDFDraftQuality_XM.pltcfg CDOT-PenTable.tbl

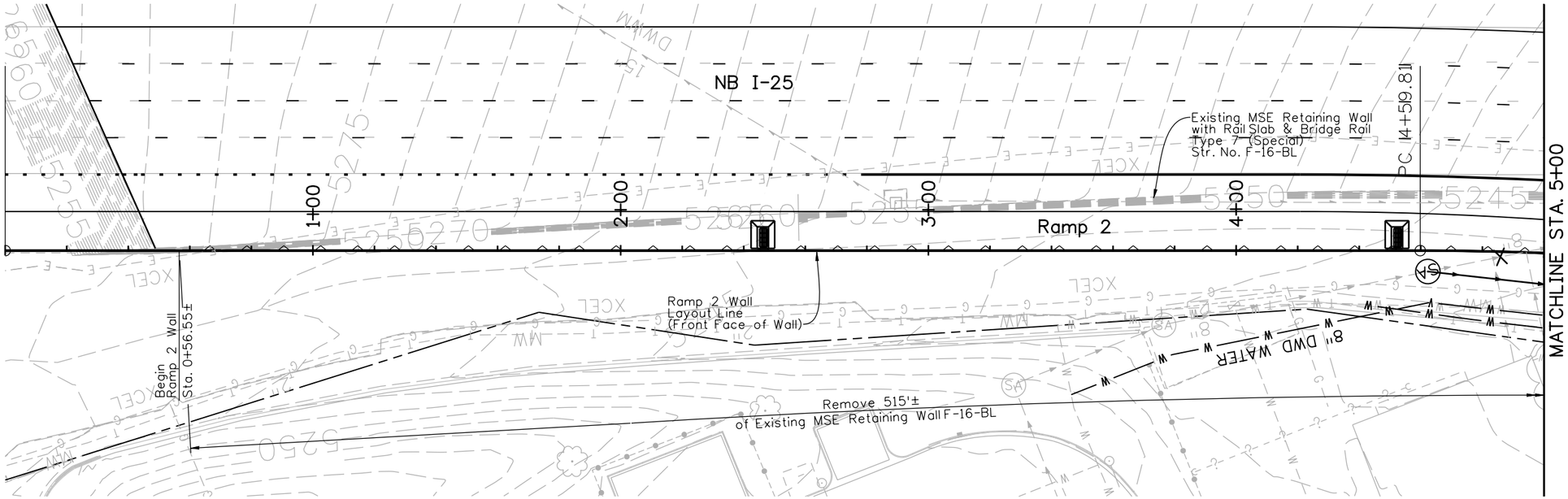

Revision Dates	(Preliminary Stage Only)

Design			Detail			Quantities		
	INITIAL	DATE		INITIAL	DATE		INITIAL	DATE
Designed By	PRS	03/10	Detailed By	RAD	03/10	Quantities By		
Checked By			Checked By			Checked By		

Ricdi 4:02:44 PM K:\08276\16311\Phase 2\Bridge\Drawings\16311WALL_PH2_F-16-DS_Ramp2WallGPE.dgn
9/27/2010 CDOT-PDFDraftQuality_XM.pltcfg CDOT-PenTable.tbl

Print Date: 9/27/2010
File Name: 16311WALL_PH2_F-16-DS_Ramp2WallGPE.dgn
Horiz. Scale: 1:40 Vert. Scale: As Noted
Unit Information Unit Leader Initials

FELSBURG HOLT & ULLEVIG 6300 South Syracuse Way Centennial, CO 80111 25 years of engineering paths to transportation solutions

Sheet Revisions		
Date:	Comments	Init.

Colorado Department of Transportation
DOT DEPARTMENT OF TRANSPORTATION
2000 South Holly Street
Denver, CO 80222
Phone: 303-972-9112 FAX: 303-972-9114
Region 6 RLB

As Constructed
No Revisions:
Revised:
Void:

I-25/SANTA FE INTERCHANGE
RAMP 2 WALL
GENERAL LAYOUT (1 OF 3)

Designer:	P. STEIN	Structure Numbers	F-16-DS
Detailer:	R. DILLON		
Sheet Subset:	WALL	Subset Sheets:	W12 of XX

Project No./Code
IM 0254-394
16311
Sheet Number 194

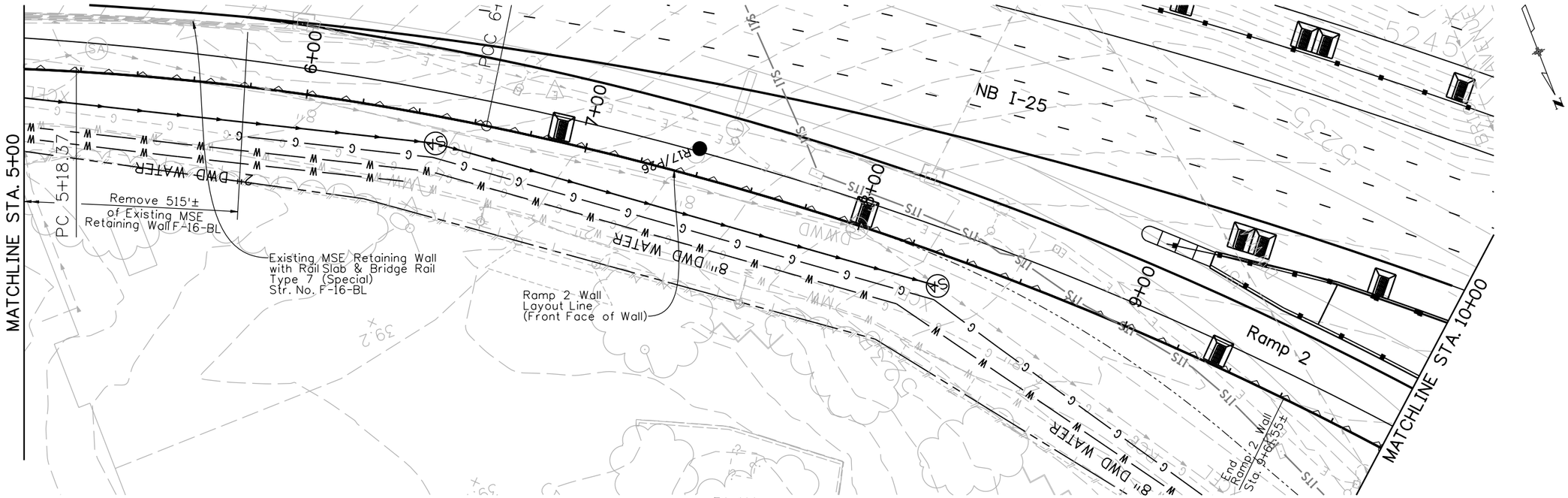

PLAN

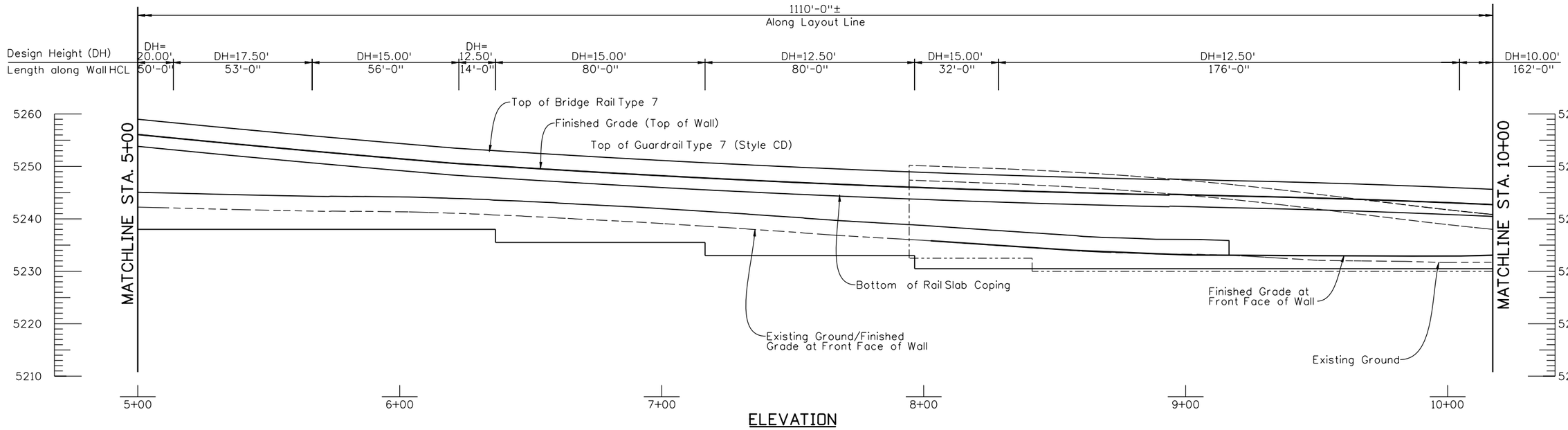

ELEVATION

| Revision Dates (Preliminary Stage Only) | | |

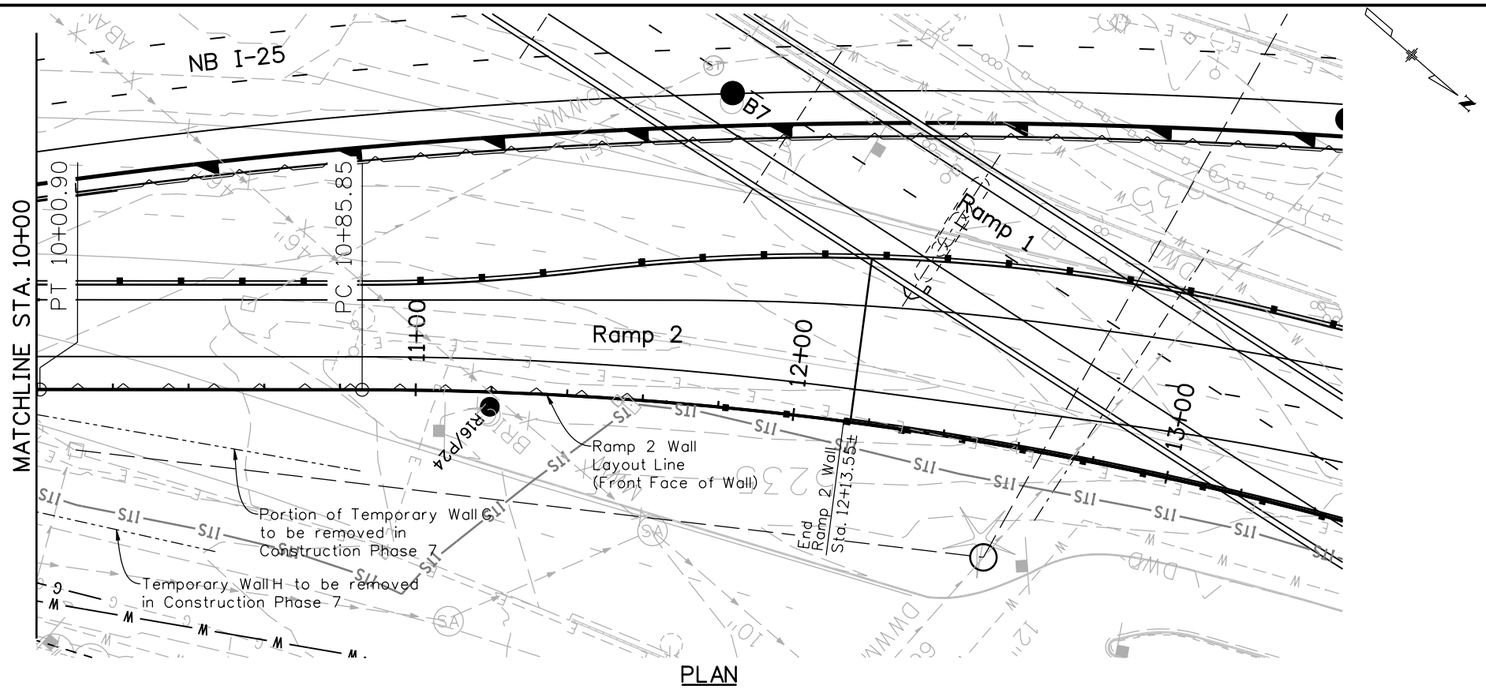

PLAN

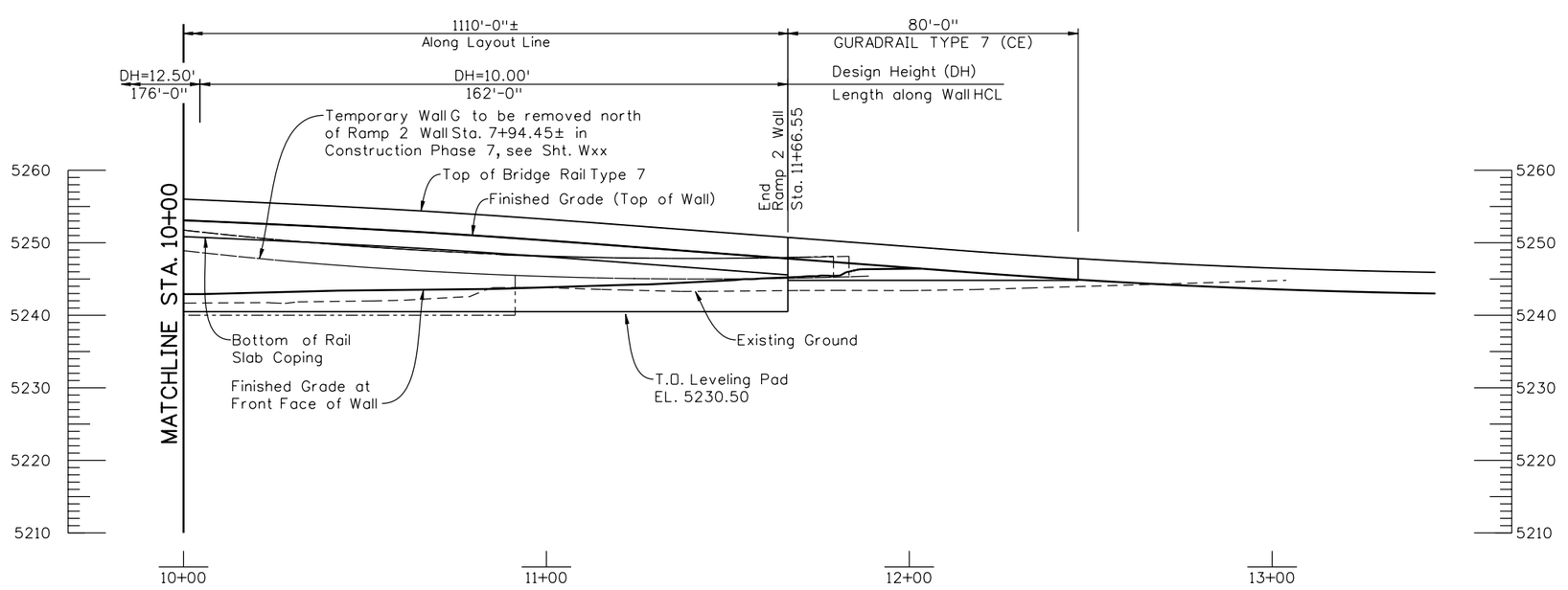

ELEVATION

Design	INITIAL	DATE	Detail	INITIAL	DATE	Quantities	INITIAL	DATE
Designed By	PRS	03/10	Detailed By	RAD	03/10	Quantities By		
Checked By			Checked By			Checked By		

Revision Dates (Preliminary Stage Only)

Print Date: 9/27/2010
File Name: 16311WALL_PH2_F-16-DS_Ramp2WallGPE.dgn
Horiz. Scale: 1:40 Vert. Scale: As Noted
Unit Information Unit Leader Initials

FELSBURG HOLT & ULLEVIG
6300 South Syracuse Way
Centennial, CO 80111
25 years of engineering paths to transportation solutions

Sheet Revisions

Date:	Comments	Init.

Colorado Department of Transportation
DOT DEPARTMENT OF TRANSPORTATION
2000 South Holly Street
Denver, CO 80222
Phone: 303-972-9112 FAX: 303-972-9114
Region 6 RLB

As Constructed
No Revisions:
Revised:
Void:

I-25/SANTA FE INTERCHANGE
RAMP 2 WALL
GENERAL LAYOUT (3 OF 3)

Designer:	P. STEIN	Structure Numbers	F-16-DS
Detailer:	R. DILLON		
Sheet Subset:	WALL	Subset Sheets:	W14 of XX

Project No./Code
IM 0254-394
16311
Sheet Number 196

Ricdil 4:02:58 PM K:\08276\16311\Phase 2\Bridge\Drawings\16311WALL_PH2_F-16-DS_Ramp2WallGPE.dgn
9/27/2010 CDOT-PDFDraftQuality_XM.pltcfg CDOT-PenTable.tbl

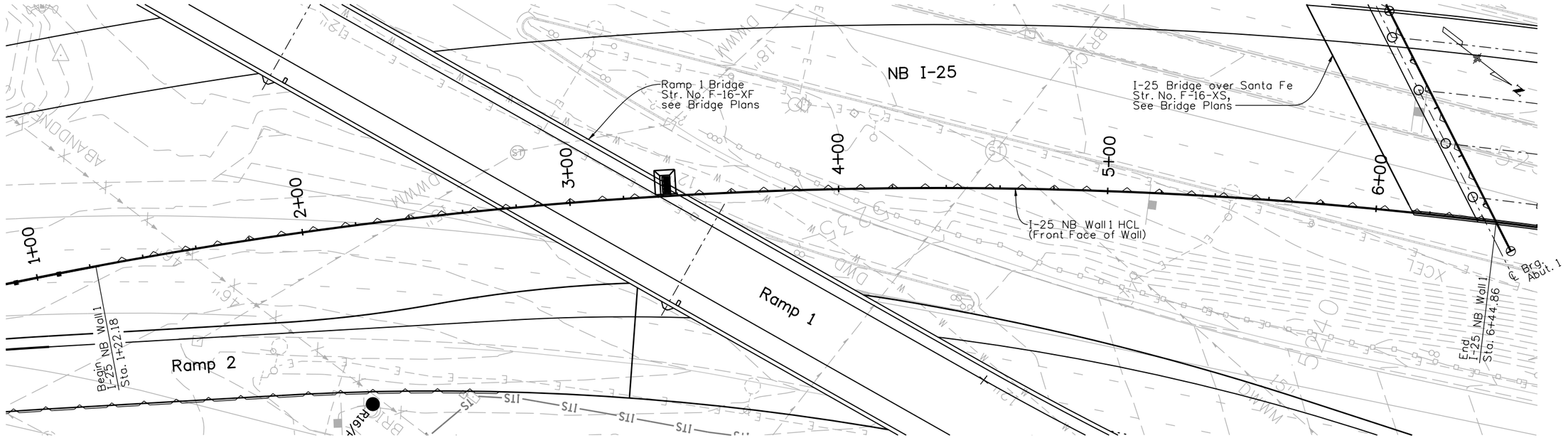

PLAN

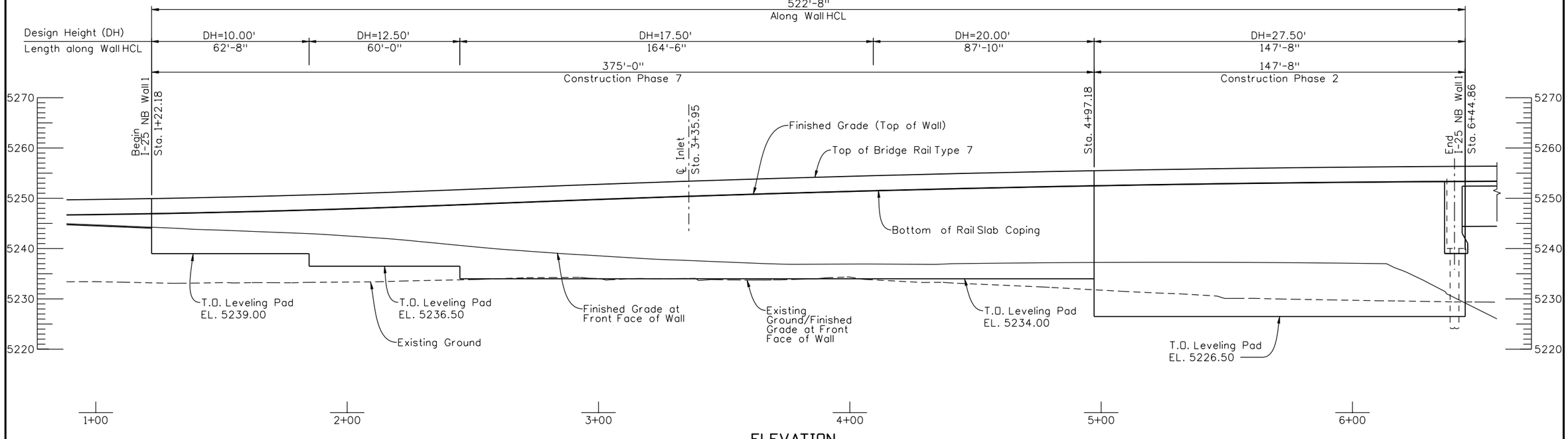

ELEVATION

Revision Dates (Preliminary Stage Only)

Design	INITIAL	DATE
Designed By	PRS	09/10
Checked By		

Detail	INITIAL	DATE
Detailed By	RAD	09/10
Checked By		

Quantities	INITIAL	DATE
Quantities By		
Checked By		

Print Date: 9/27/2010
File Name: 16311WALL_PH2_F-16-DW_I25-NBWall1GPE.dgn
Horiz. Scale: 1:40 Vert. Scale: As Noted
Unit Information Unit Leader Initials

FELSBURG HOLT & ULLEVIG
6300 South Syracuse Way
Centennial, CO 80111
25 years of engineering paths to transportation solutions

Sheet Revisions

Date:	Comments	Init.

Colorado Department of Transportation
DEPARTMENT OF TRANSPORTATION
2000 South Holly Street
Denver, CO 80222
Phone: 303-972-9112 FAX: 303-972-9114
Region 6 RLB

As Constructed
No Revisions:
Revised:
Void:

I-25/SANTA FE INTERCHANGE
I-25 NB WALL 1
GENERAL LAYOUT

Designer: P. STEIN
Detailer: R. DILLON
Sheet Subset: WALL
Structure Numbers: F-16-DW
Subset Sheets: W15 of XX

Project No./Code
IM 0254-394
16311
Sheet Number 197

Ricdil 4:03:06 PM K:\08276\16311\Phase 2\Bridge\Drawings\16311WALL_PH2_F-16-DW_I25-NBWall1GPE.dgn
9/27/2010 CDOT-PDFDraftQuality_XM.pltcfg CDOT-PenTable.tbl

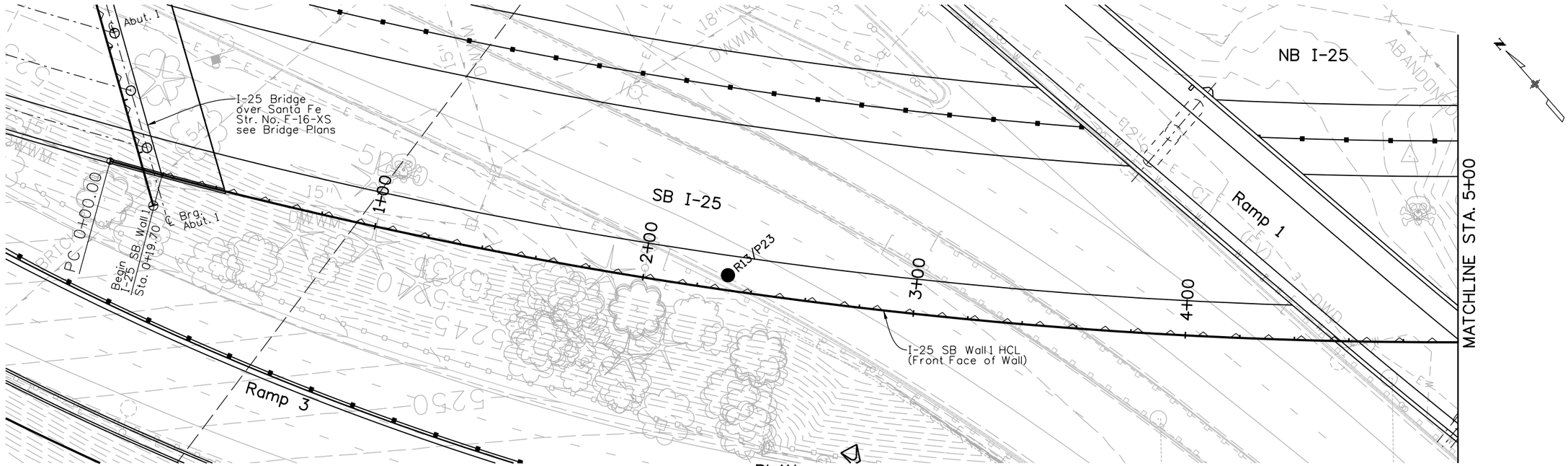

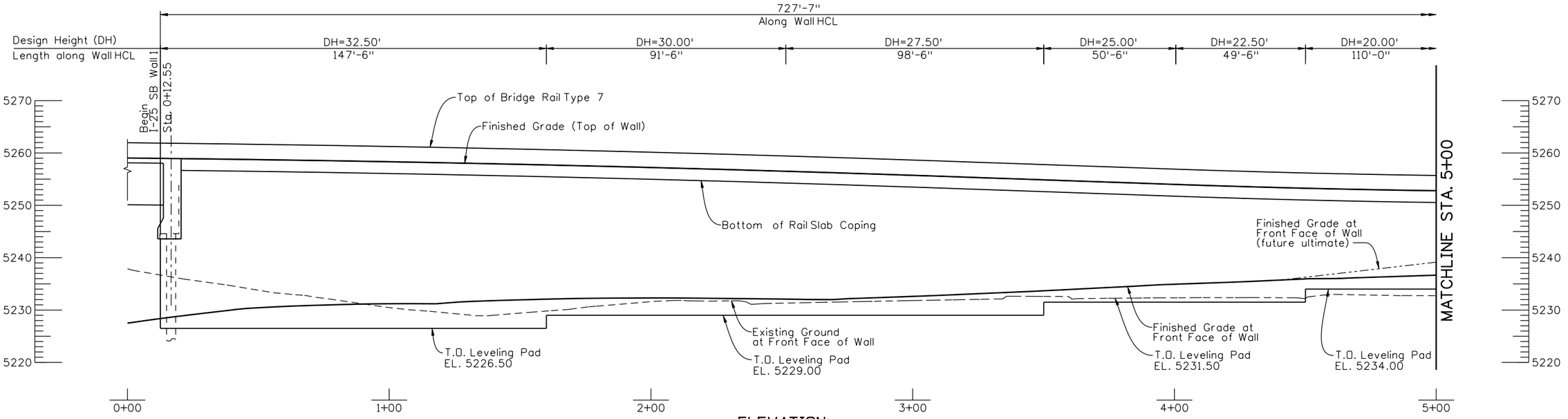

Revision Dates (Preliminary Stage Only)

Design			Detail			Quantities		
	INITIAL	DATE		INITIAL	DATE		INITIAL	DATE
Designed By	PRS	09/10	Detailed By	RAD	09/10	Quantities By		
Checked By			Checked By			Checked By		

Print Date: 9/27/2010
File Name: 16311WALL_PH2_F-16-DW_I25-SBWall1GPE.dgn
Horiz. Scale: 1:40 Vert. Scale: As Noted
Unit Information Unit Leader Initials

FELSBURG HOLT & ULLEVIG 6300 South Syracuse Way Centennial, CO 80111 25 years of engineering paths to transportation solutions

Sheet Revisions

Date:	Comments	Init.

Colorado Department of Transportation
2000 South Holly Street
Denver, CO 80222
Phone: 303-972-9112 FAX: 303-972-9114
Region 6 RLB

As Constructed
No Revisions:
Revised:
Void:

I-25/SANTA FE INTERCHANGE
I-25 SB WALL 1
GENERAL LAYOUT (1 OF 2)

Designer: P. STEIN
Detailer: R. DILLON
Sheet Subset: WALL
Structure Numbers:
Subset Sheets: W16 of XX

Project No./Code
IM 0254-394
16311
Sheet Number 198

R:\cdi 4:03:15 PM K:\08276\16311\Phase 2\Bridge\Drawings\16311WALL_PH2_F-16-DW_I25-SBWall1GPE.dgn
9/27/2010 CDOT-PDFDraftQuality_XM.pltcfg CDOT-PenTable.tbl

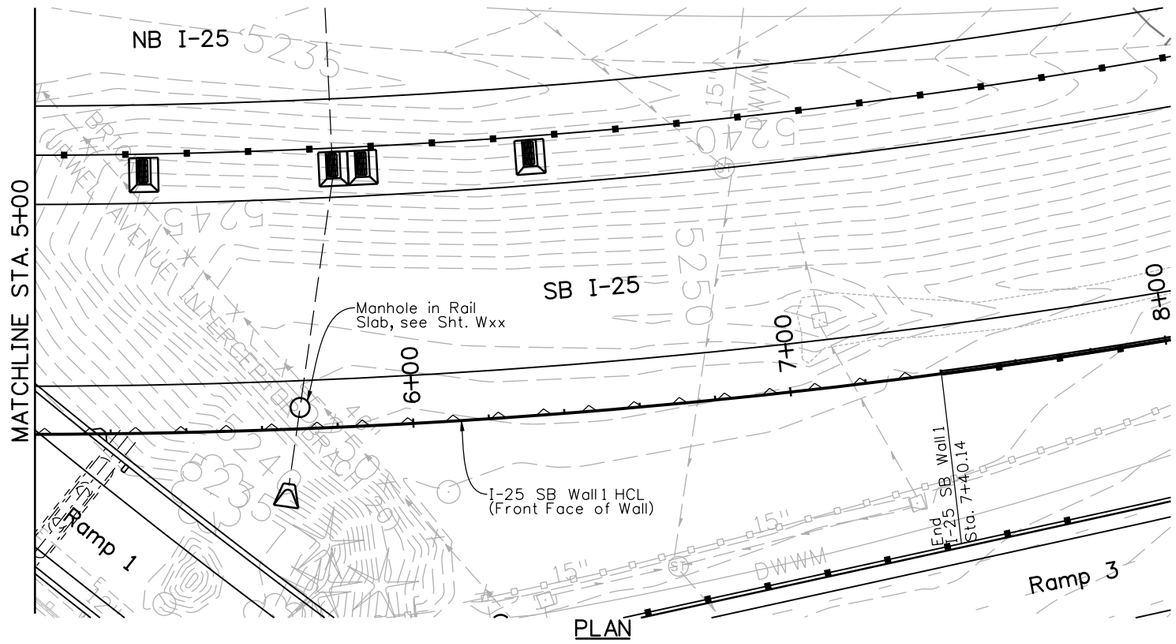

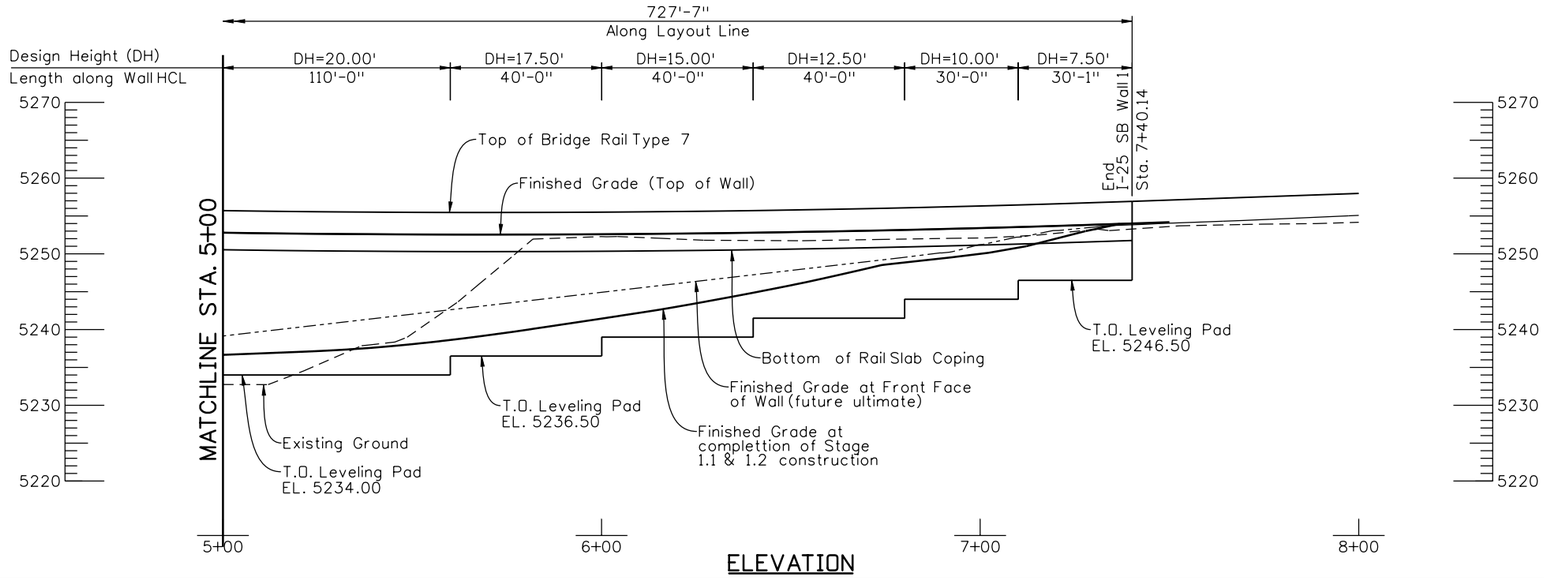

ELEVATION

Print Date: 9/27/2010
File Name: 16311WALL_PH2_F-16-DW_I25-SBWall1GPE.dgn
Horiz. Scale: 1:40 Vert. Scale: As Noted
Unit Information Unit Leader Initials

FELSBURG HOLT & ULLEVIG
6300 South Syracuse Way
Centennial, CO 80111
25 years of engineering paths to transportation solutions

Sheet Revisions		
Date:	Comments	Init.

Colorado Department of Transportation
DEPARTMENT OF TRANSPORTATION
2000 South Holly Street
Denver, CO 80222
Phone: 303-972-9112 FAX: 303-972-9114
Region 6 RLB

As Constructed
No Revisions:
Revised:
Void:

I-25/SANTA FE INTERCHANGE
I-25 SB WALL 1
GENERAL LAYOUT (2 OF 2)

Designer: P. STEIN
Detailer: R. DILLON
Sheet Subset: WALL
Structure Numbers:
Subset Sheets: W17 of XX

Project No./Code
IM 0254-394
16311
Sheet Number 199

Revision Dates (Preliminary Stage Only)

Design			Detail			Quantities		
	INITIAL	DATE		INITIAL	DATE		INITIAL	DATE
Designed By	PRS	09/10	Detailed By	RAD	09/10	Quantities By		
Checked By			Checked By			Checked By		

Ricdi 4:03:22 PM K:\08276\16311\Phase 2\Bridge\Drawings\16311WALL_PH2_F-16-DW_I25-SBWall1GPE.dgn
9/27/2010 CDOT-PDFDraftQuality_XM.pltcfg CDOT-PenTable.tbl

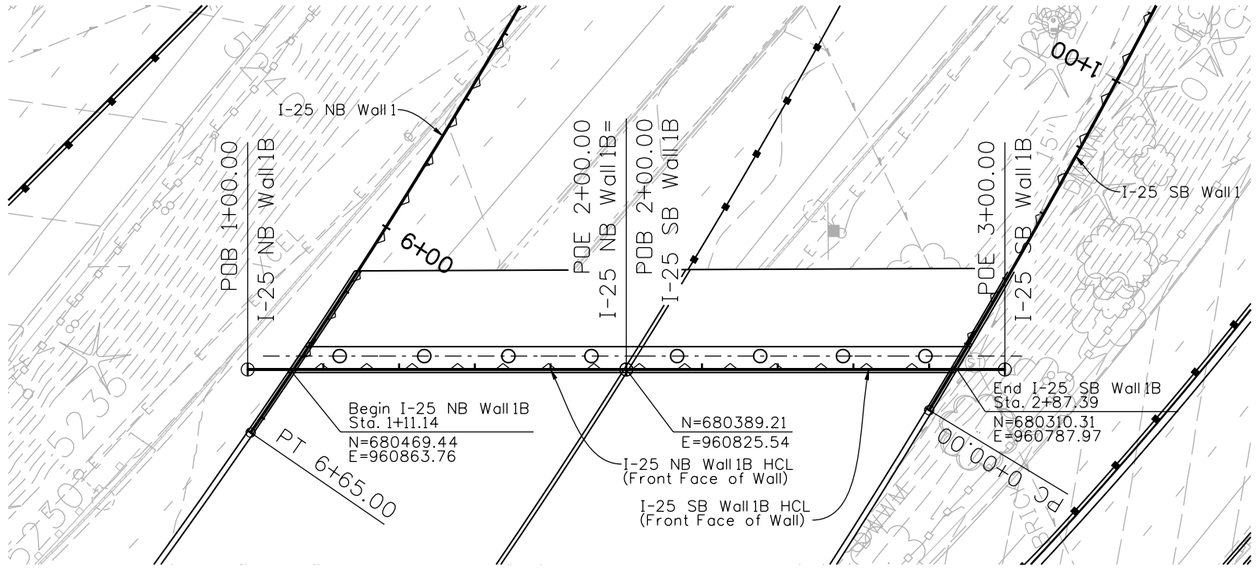

PLAN

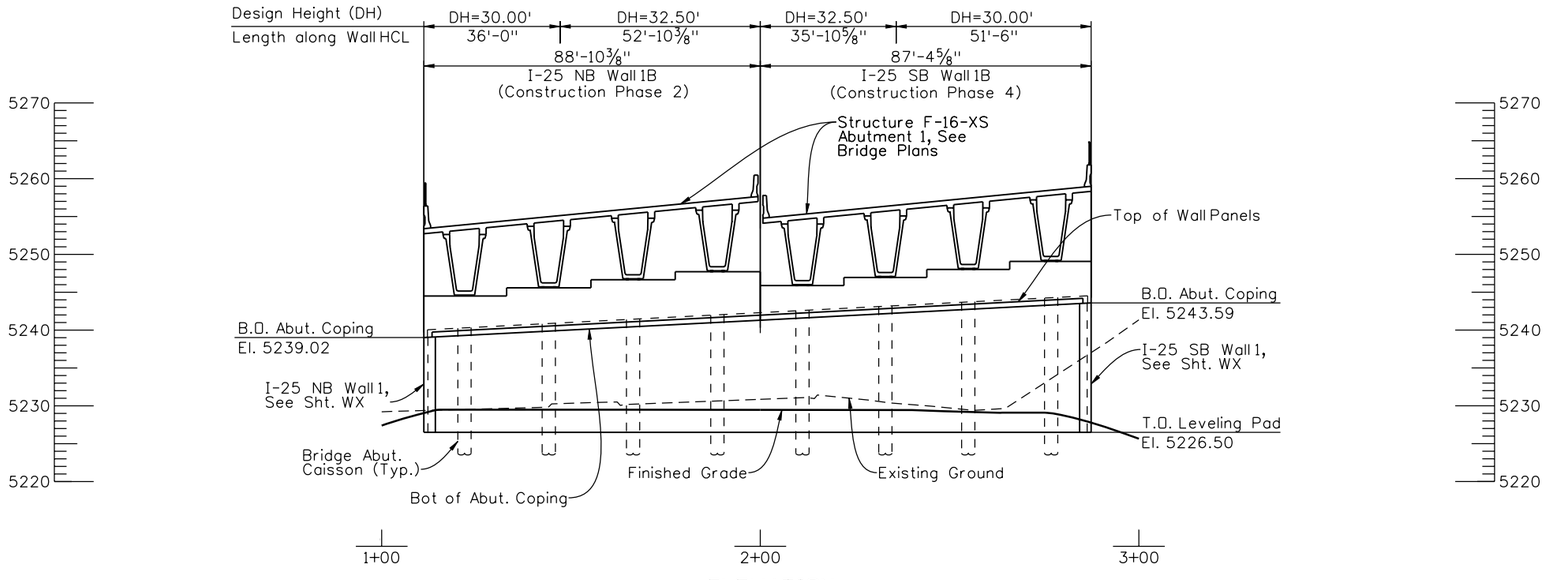

ELEVATION

Design				Detail				Quantities			
	INITIAL	DATE			INITIAL	DATE			INITIAL	DATE	
Designed	EPS	03/10		Detailed	BAD	03/10		Quantities By			
Checked	By			Checked	By			Checked By			

Revision Dates (Preliminary Stage Only)

Print Date: 9/27/2010	Sheet Revisions	
File Name: 16311WALL_PH2_F-16-DX_NB-SB-1B-GPE.dgn	Date:	Comments / Init.
Horiz. Scale: 1:40 Vert. Scale: As Noted		
Unit Information Unit Leader Initials		

Summit Technical Resources, Inc. 4582 South Syracuse Way Suite 330 Greenwood Village, CO 80111 Phone: 303-721-1440 Fax: 303-721-0832 Engineering paths to transportation solutions

Colorado Department of Transportation
2000 South Holly Street
Denver, CO 80222
Phone: 303-972-9112 FAX: 303-972-9114
Region 6 RLB

As Constructed
No Revisions:
Revised:
Void:

I-25/SANTA FE INTERCHANGE
I-25 SB WALL 1B & I-25 NB WALL 1B
GENERAL LAYOUT

Designer:	P. STEIN	Structure Numbers	F-16-DX
Detailer:	R. DILLON		
Sheet Subset:	WALL	Subset Sheets:	W18 of XX

Project No./Code
IM 0254-394
16311
Sheet Number 200

Ricdil 4:03:29 PM K:\08276\16311\Phase 2\Bridge\Drawings\16311WALL_PH2_F-16-DX_NB-SB-1B-GPE.dgn
9/27/2010 CDOT-PDFDraftQuality_XM.pltcfg CDOT-PenTable.tbl

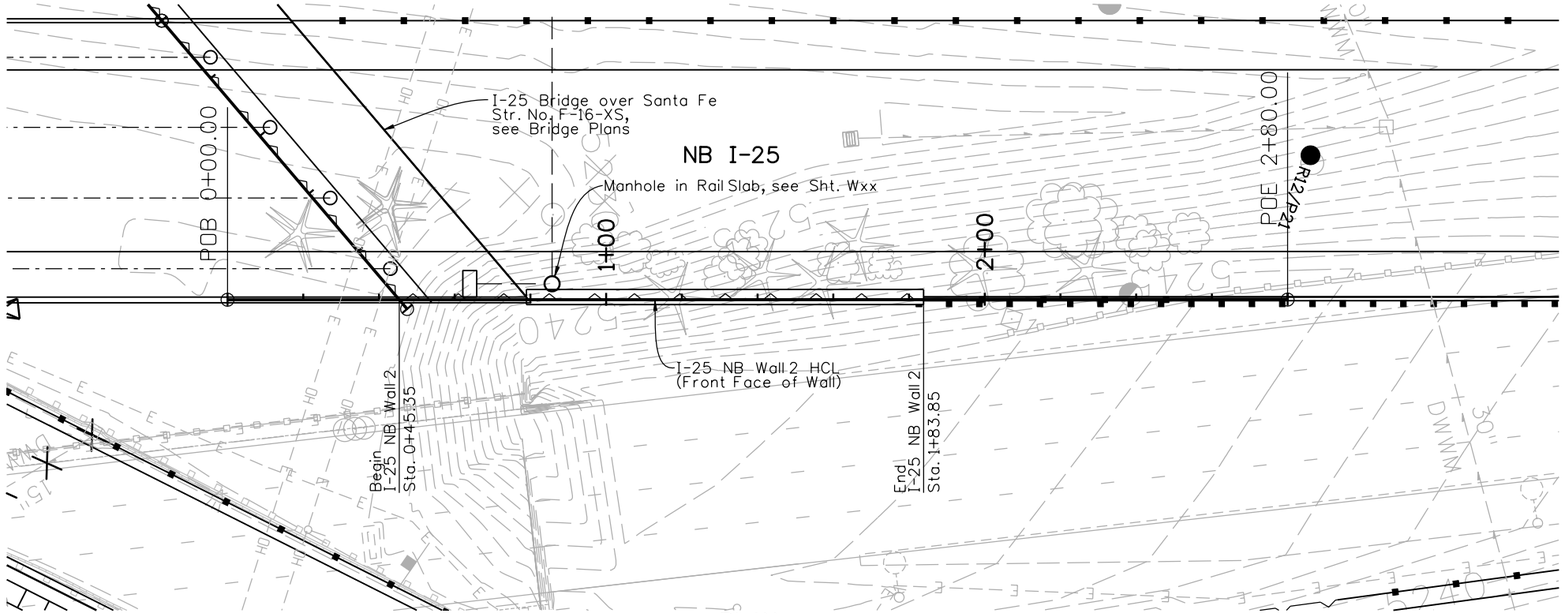

PLAN

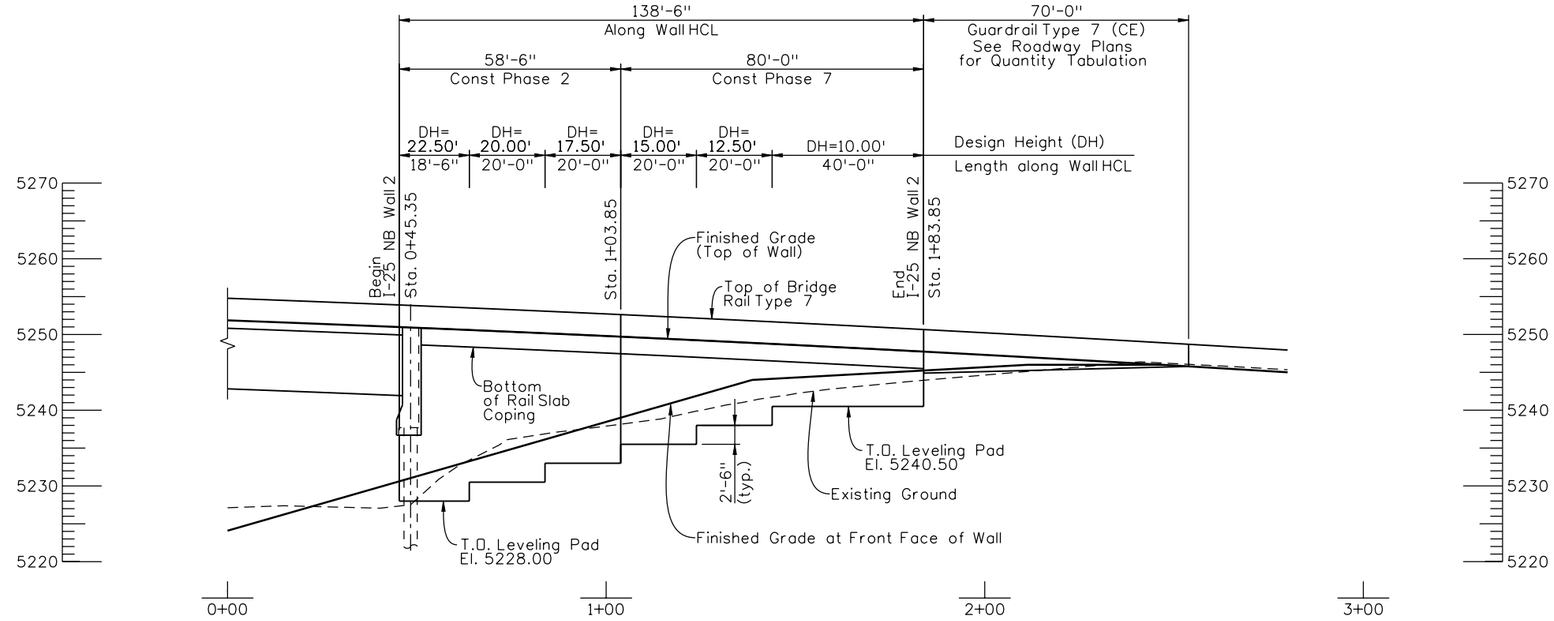

ELEVATION

Revision Dates (Preliminary Stage Only)

Design				Detail				Quantities			
	INITIAL	DATE		INITIAL	DATE		INITIAL	DATE
Designed By	PRS	09/10	Detailed By	RAD	09/10	Quantities By		
Checked By			Checked By			Checked By		

Print Date: 9/27/2010
File Name: 16311WALL_PH2_F-16-DX_I25-NBWall2GPE.dgn
Horiz. Scale: 1:40 Vert. Scale: As Noted
Unit Information Unit Leader Initials

FELSBURG HOLT & ULLEVIG
6300 South Syracuse Way
Centennial, CO 80111
25 years of engineering paths to transportation solutions

Sheet Revisions		
Date:	Comments	Init.

Colorado Department of Transportation
DEPARTMENT OF TRANSPORTATION
2000 South Holly Street
Denver, CO 80222
Phone: 303-972-9112 FAX: 303-972-9114
Region 6 RLB

As Constructed
No Revisions:
Revised:
Void:

I-25/SANTA FE INTERCHANGE
I-25 NB WALL 2
GENERAL LAYOUT

Designer:	P. STEIN	Structure Numbers	F-16-DX
Detailer:	R. DILLON		
Sheet Subset:	WALL	Subset Sheets:	W19 of XX

Project No./Code
IM 0254-394
16311
Sheet Number 201

R:\cdi 4:03:38 PM K:\08276\16311\Phase 2\Bridge\Drawings\16311WALL_PH2_F-16-DX_I25-NBWall2GPE.dgn
9/27/2010 CDOT-PDFDraftQuality_XM.pltcfg CDOT-PenTable.tbl

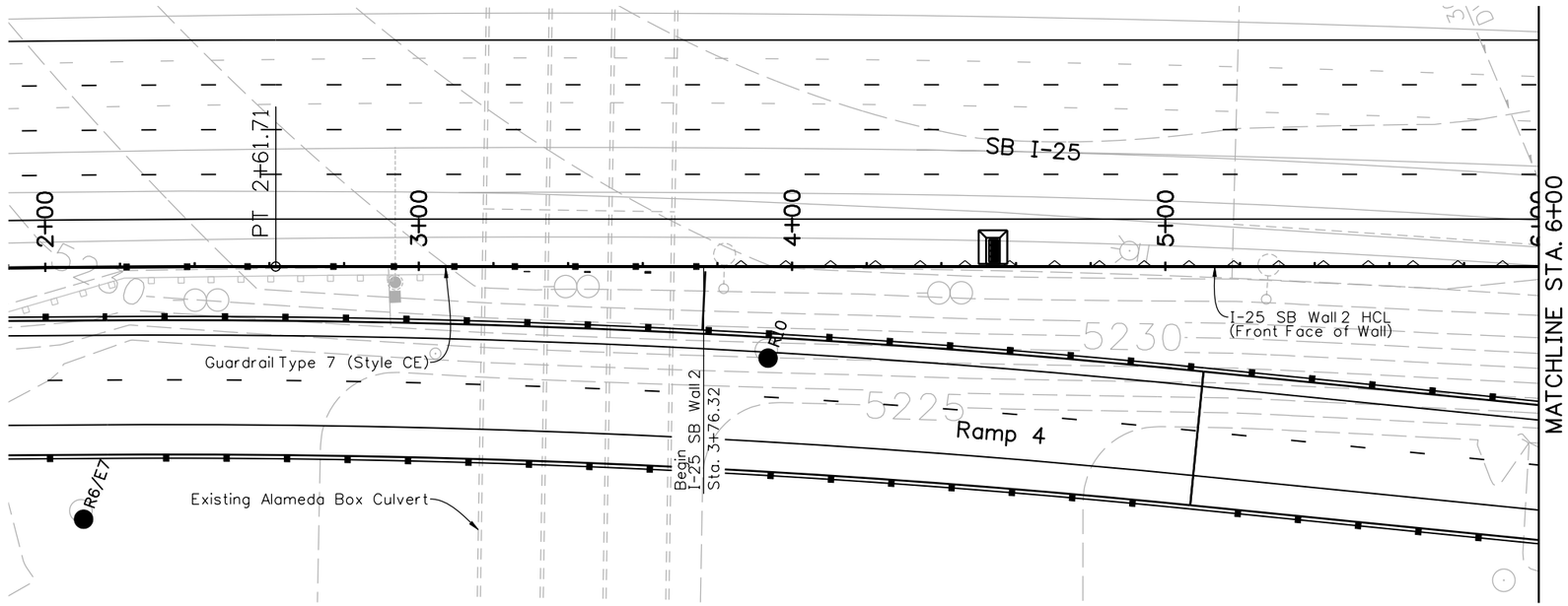

PLAN

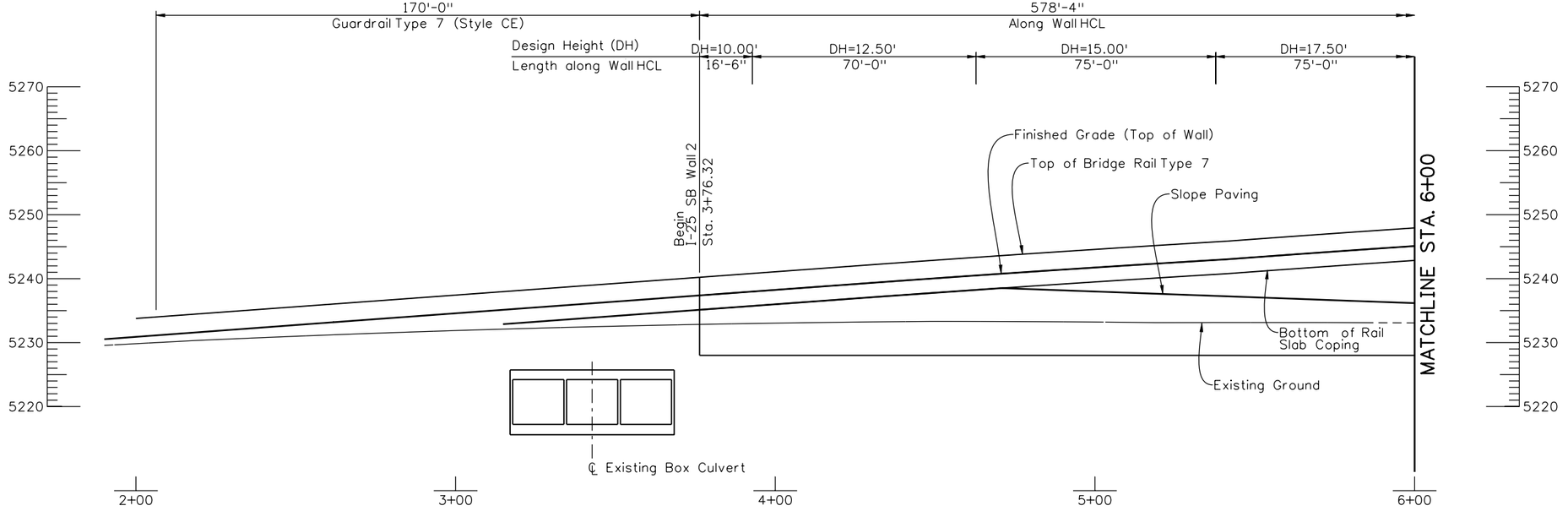

ELEVATION

Revision Dates (Preliminary Stage Only)

Design			Detail			Quantities		
	INITIAL	DATE		INITIAL	DATE		INITIAL	DATE
Designed By	PRS	09/10	Detailed By	RAD	09/10	Quantities By		
Checked By			Checked By			Checked By		

Print Date: 9/27/2010
File Name: 16311WALL_PH2_F-16-DX_I25-SBWall2GPE.dgn
Horiz. Scale: 1:40 Vert. Scale: As Noted
Unit Information Unit Leader Initials

FELSBURG HOLT & ULLEVIG
6300 South Syracuse Way
Centennial, CO 80111
25 years of engineering paths to transportation solutions

Sheet Revisions		
Date:	Comments	Init.

Colorado Department of Transportation
DEPARTMENT OF TRANSPORTATION
2000 South Holly Street
Denver, CO 80222
Phone: 303-972-9112 FAX: 303-972-9114
Region 6 RLB

As Constructed
No Revisions:
Revised:
Void:

I-25/SANTA FE INTERCHANGE
I-25 SB WALL 2
GENERAL LAYOUT (1 OF 2)

Designer:	P. STEIN	Structure Numbers	F-16-DX
Detailer:	R. DILLON		
Sheet Subset:	WALL	Subset Sheets:	W20 of XX

Project No./Code
IM 0254-394
16311
Sheet Number 202

Ricdi 4:03:45 PM K:\08276\16311\Phase 2\Bridge\Drawings\16311WALL_PH2_F-16-DX_I25-SBWall2GPE.dgn
9/27/2010 CDOT-PDFDraftQuality_XM.pltcfg CDOT-PenTable.tbl

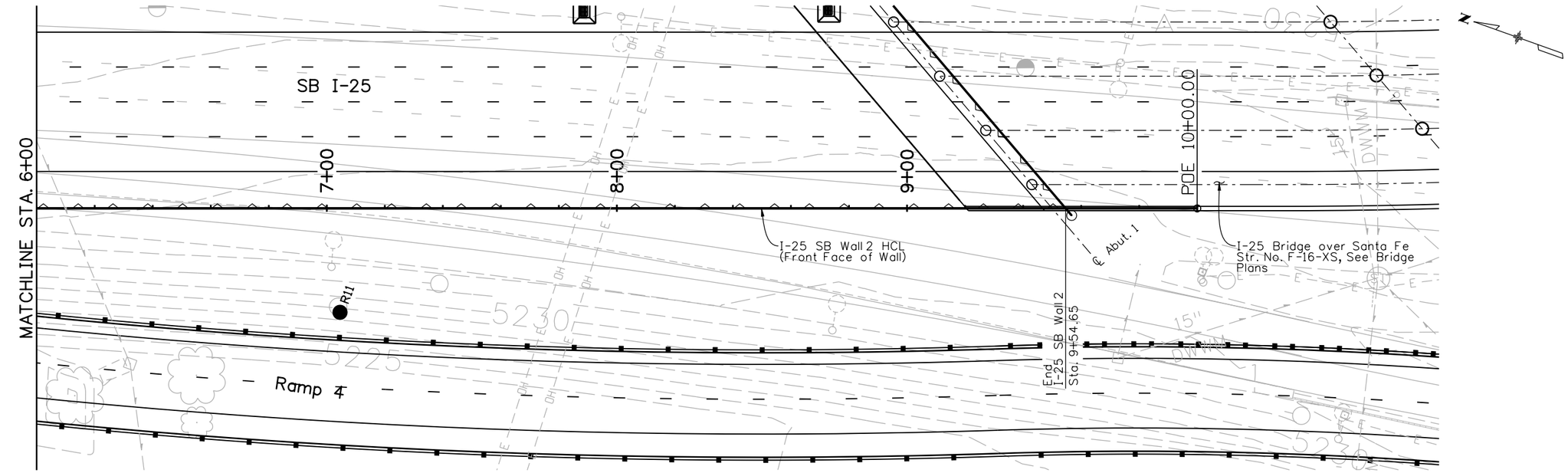

PLAN

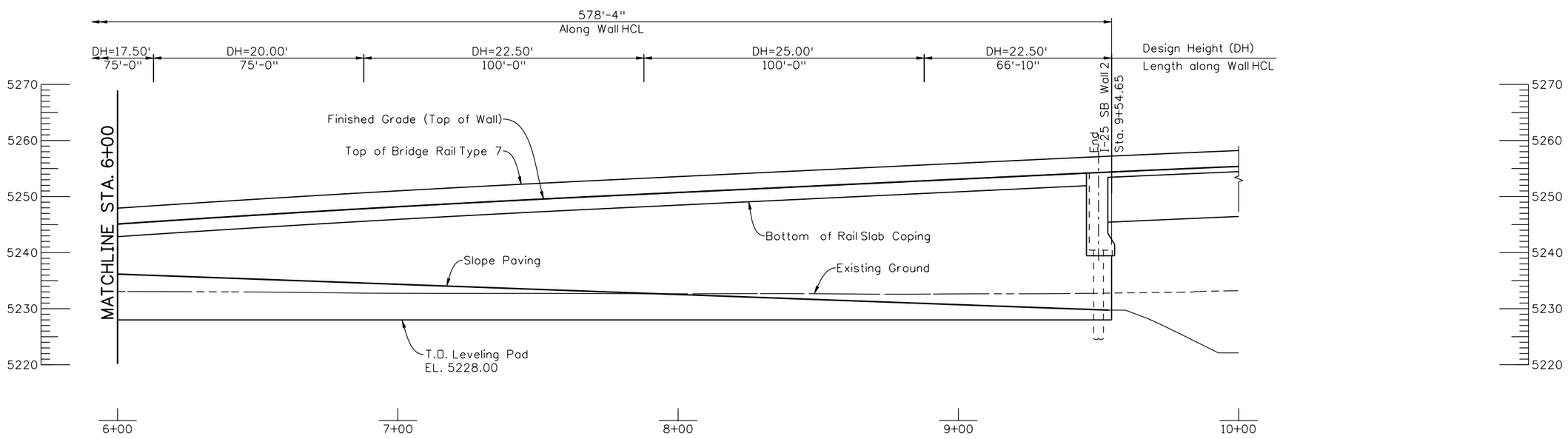

ELEVATION

Revision Dates (Preliminary Stage Only)

Design	INITIAL	DATE
Designed By	PRS	09/10
Checked By		

Detail	INITIAL	DATE
Detailed By	RAD	09/10
Checked By		

Quantities	INITIAL	DATE
Quantities By		
Checked By		

Print Date: 9/27/2010
File Name: 16311WALL_PH2_F-16-DX_I25-SBWall2GPE.dgn
Horiz. Scale: 1:40 Vert. Scale: As Noted
Unit Information Unit Leader Initials

FELSBURG HOLT & ULLEVIG
6300 South Syracuse Way
Centennial, CO 80111
25 years of engineering paths to transportation solutions

Sheet Revisions		
Date:	Comments	Init.

Colorado Department of Transportation
DEPARTMENT OF TRANSPORTATION
2000 South Holly Street
Denver, CO 80222
Phone: 303-972-9112 FAX: 303-972-9114
Region 6 RLB

As Constructed
No Revisions:
Revised:
Void:

I-25/SANTA FE INTERCHANGE
I-25 SB WALL 2
GENERAL LAYOUT (2 OF 2)

Designer:	P. STEIN	Structure Numbers	F-16-DX
Detailer:	R. DILLON		
Sheet Subset:	WALL	Subset Sheets:	W21 of XX

Project No./Code
IM 0254-394
16311
Sheet Number 203

Ricdi 4:03:51 PM K:\08276\16311\Phase 2\Bridge\Drawings\16311WALL_PH2_F-16-DX_I25-SBWall2GPE.dgn
9/27/2010 CDOT-PDFDraftQuality_XM.pltcfg CDOT-PenTable.tbl

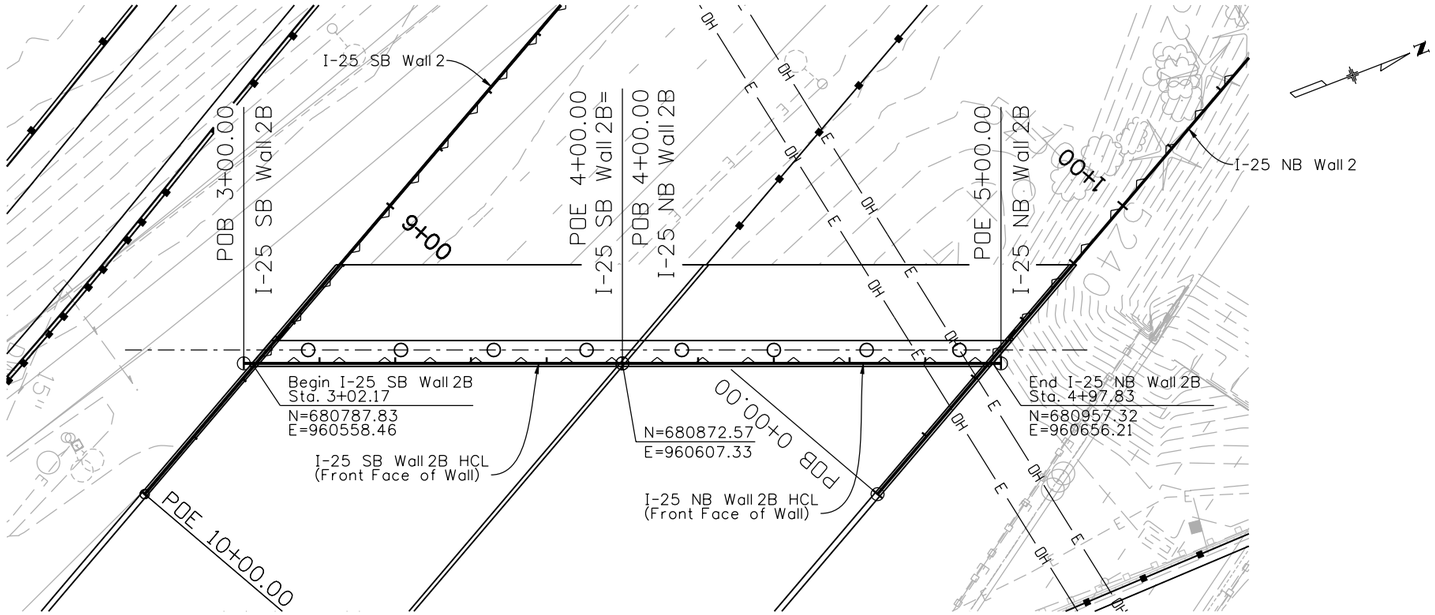

PLAN

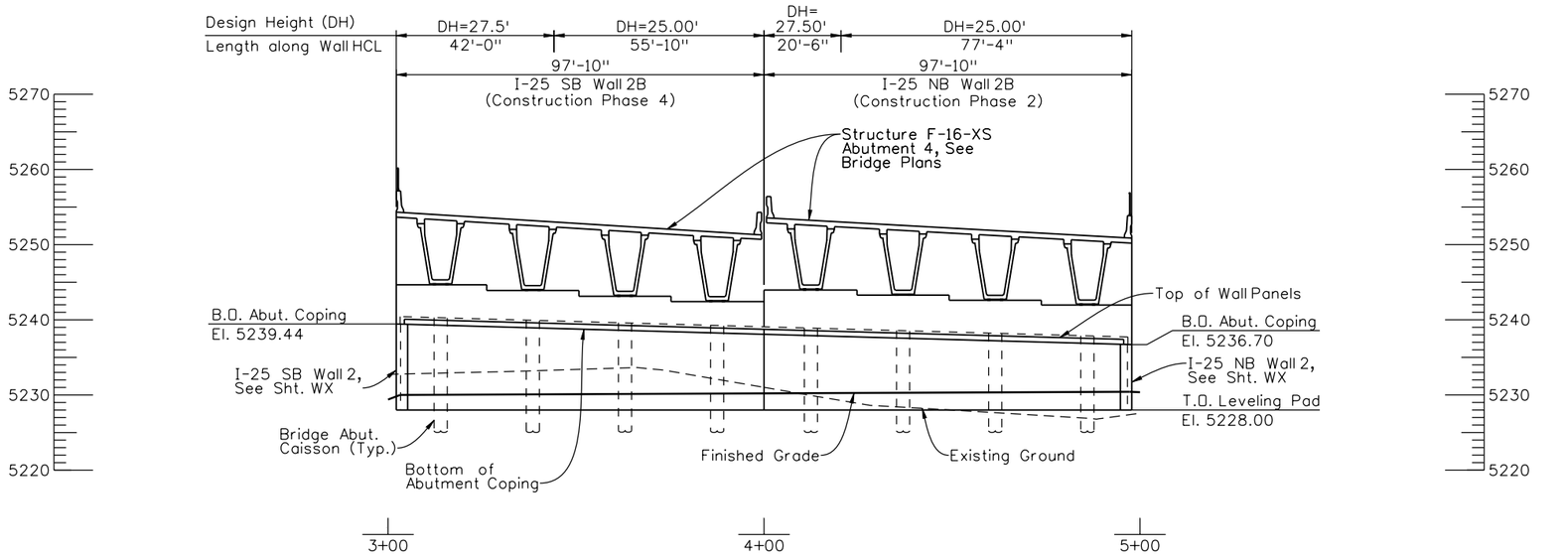

ELEVATION

Revision Dates (Preliminary Stage Only)

Design			Detail			Quantities		
	INITIAL	DATE		INITIAL	DATE		INITIAL	DATE
Designed By	PRS	03/10	Detailed By	RAD	03/10	Quantities By		
Checked By			Checked By			Checked By		

R:\cdi 4:03:59 PM K:\08276\16311\Phase 2\Bridge\Drawings\16311WALL_PH2_F-16-DX_NB-SB-2B-GPE.dgn
9/27/2010 CDOT-PDFDraftQuality_XM.pltcfg CDOT-PenTable.tbl

Print Date: 9/27/2010
File Name: 16311WALL_PH2_F-16-DX_NB-SB-2B-GPE.dgn
Horiz. Scale: 1:40 Vert. Scale: As Noted
Unit Information Unit Leader Initials

FELSBURG HOLT & ULLEVIG 6300 South Syracuse Way Centennial, CO 80111 25 years of engineering paths to transportation solutions

Sheet Revisions		
Date:	Comments	Init.

Colorado Department of Transportation
DEPARTMENT OF TRANSPORTATION
2000 South Holly Street
Denver, CO 80222
Phone: 303-972-9112 FAX: 303-972-9114
Region 6 RLB

As Constructed
No Revisions:
Revised:
Void:

I-25/SANTA FE INTERCHANGE
I-25 SB WALL 2B & I-25 NB WALL 2B
GENERAL LAYOUT

Designer:	P. STEIN	Structure Numbers	F-16-DX
Detailer:	R. DILLON		
Sheet Subset:	WALL	Subset Sheets:	W22 of XX

Project No./Code
IM 0254-394
16311
Sheet Number 204

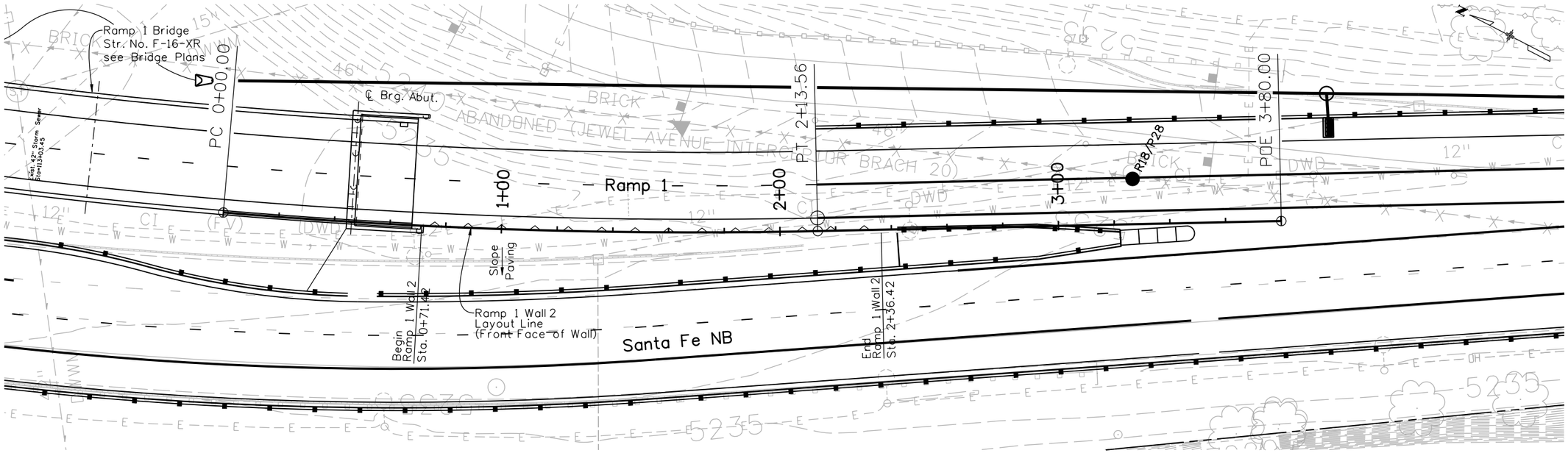

PLAN

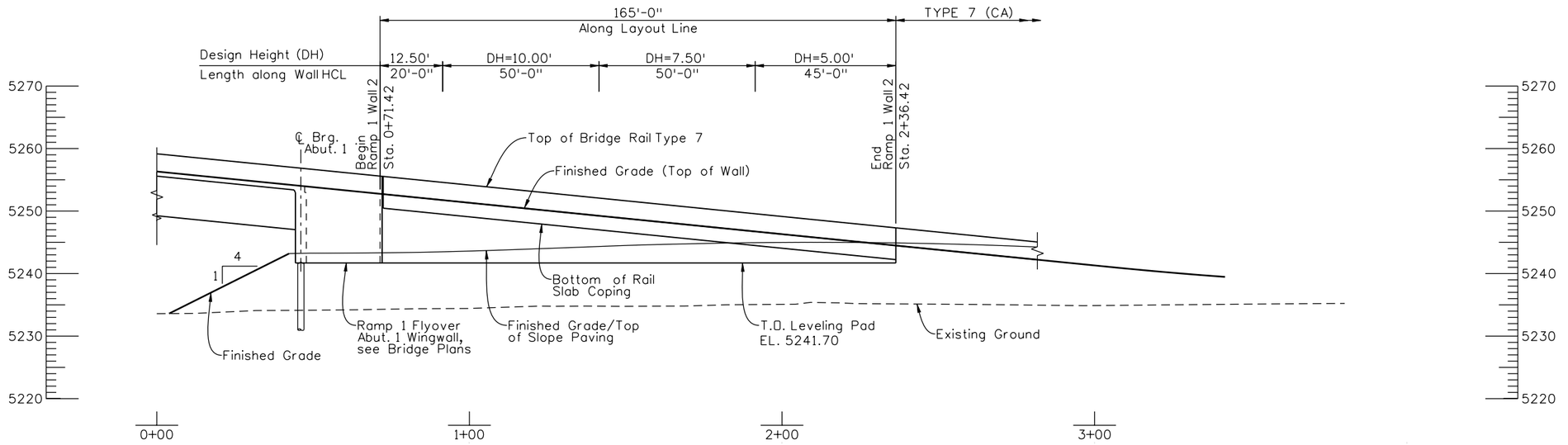

ELEVATION

Revision Dates (Preliminary Stage Only)

Design				Detail				Quantities			
	INITIAL	DATE		INITIAL	DATE		INITIAL	DATE
Designed By	PRS	03/10	Detailed By	RAD	03/10	Quantities By		
Checked By			Checked By			Checked By		

Print Date: 9/27/2010
File Name: 16311WALL_PH2_F-16-DV_Ramp1Wall2GPE.dgn
Horiz. Scale: 1:40 Vert. Scale: As Noted
Unit Information Unit Leader Initials

FELSBURG HOLT & ULLEVIG
6300 South Syracuse Way
Centennial, CO 80111
25 years of engineering paths to transportation solutions

Sheet Revisions

Date:	Comments	Init.

Colorado Department of Transportation
DOT DEPARTMENT OF TRANSPORTATION
2000 South Holly Street
Denver, CO 80222
Phone: 303-972-9112 FAX: 303-972-9114
Region 6 RLB

As Constructed
No Revisions:
Revised:
Void:

I-25/SANTA FE INTERCHANGE
I-25 RAMP 1 WALL 2
GENERAL LAYOUT

Designer:	P. STEIN	Structure Numbers	F-16-DU
Detailer:	R. DILLON		
Sheet Subset:	WALL	Subset Sheets:	W23 of XX

Project No./Code
IM 0254-394
16311
Sheet Number 205

R:\cdi 4:04:08 PW K:\08276\16311\Phase 2\Bridge\Drawings\16311WALL_PH2_F-16-DV_Ramp1Wall2GPE.dgn
9/27/2010 CDOT-PDFDraftQuality_XM.pltcfg CDOT-PenTable.tbl

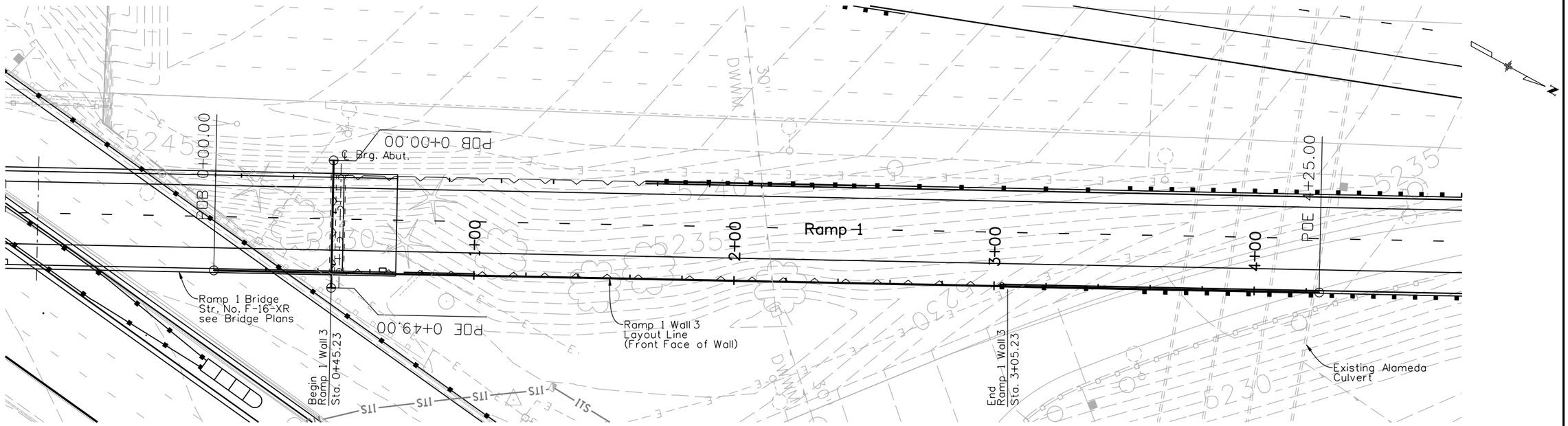

PLAN

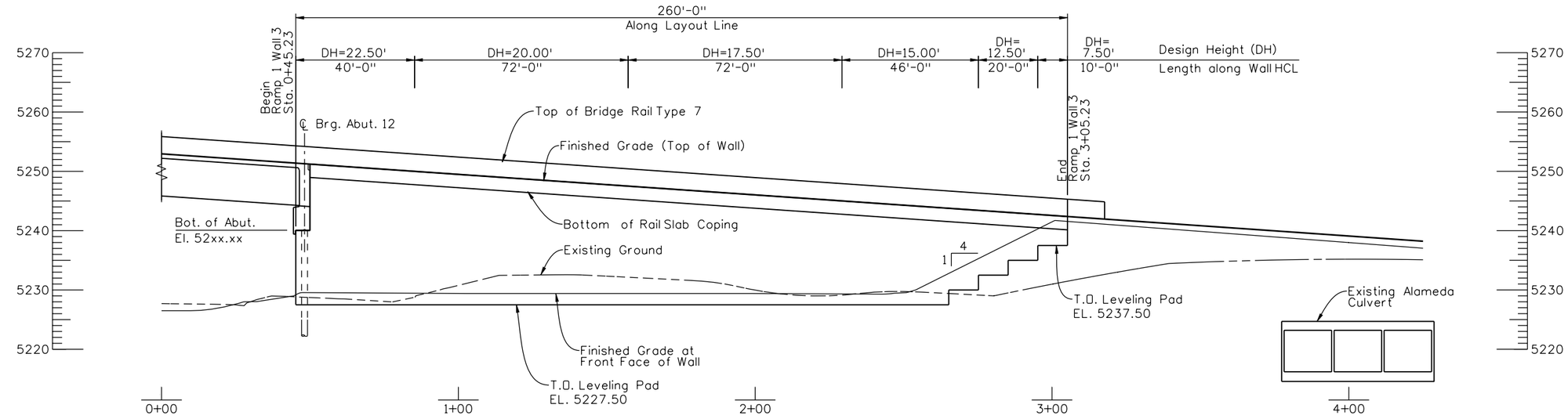

ELEVATION

Revision Dates (Preliminary Stage Only)

Design			Detail			Quantities		
Designed By	INITIAL	DATE	Detailed By	INITIAL	DATE	Quantities By	INITIAL	DATE
	PRS	03/10		RAD	03/10			
Checked By			Checked By			Checked By		

Print Date: 9/27/2010	
File Name: 16311WALL_PH2_F-16-DV_Ramp1Wall3GPE.dgn	
Horiz. Scale: 1:40	Vert. Scale: As Noted
Unit Information	Unit Leader Initials

FELSBURG HOLT & ULLEVIG 6300 South Syracuse Way Centennial, CO 80111 25 years of engineering paths to transportation solutions

Sheet Revisions		
Date:	Comments	Init.

Colorado Department of Transportation
DEPARTMENT OF TRANSPORTATION
2000 South Holly Street
Denver, CO 80222
Phone: 303-972-9112 FAX: 303-972-9114
Region 6 RLB

As Constructed
No Revisions:
Revised:
Void:

I-25/SANTA FE INTERCHANGE
RAMP 1 WALL 3
GENERAL LAYOUT

Designer:	P. STEIN	Structure Numbers	F-16-DV
Detailer:	R. DILLON		
Sheet Subset:	WALL	Subset Sheets:	W24 of XX

Project No./Code	
IM 0254-394	
16311	
Sheet Number	206

Ricdi 4:04:16 PM K:\08276\16311\Phase 2\Bridge\Drawings\16311WALL_PH2_F-16-DV_Ramp1Wall3GPE.dgn
9/27/2010 CDOT-PDFDraftQuality_XM.pltcfg CDOT-PenTable.tbl

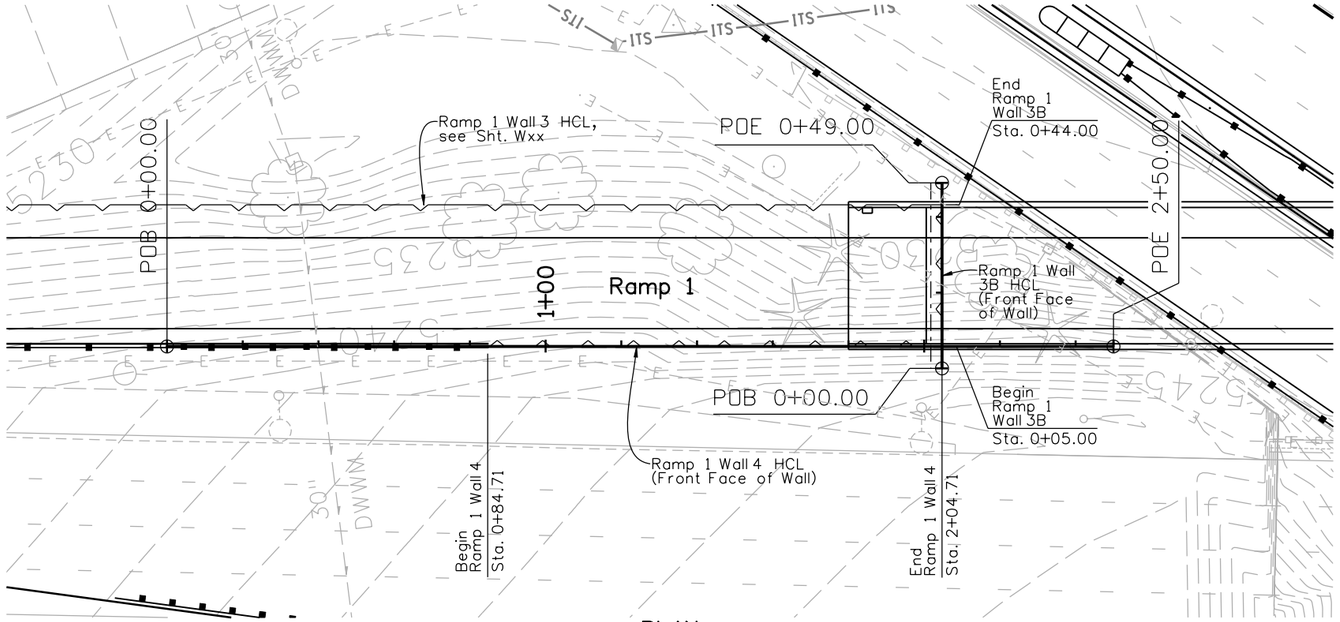

PLAN

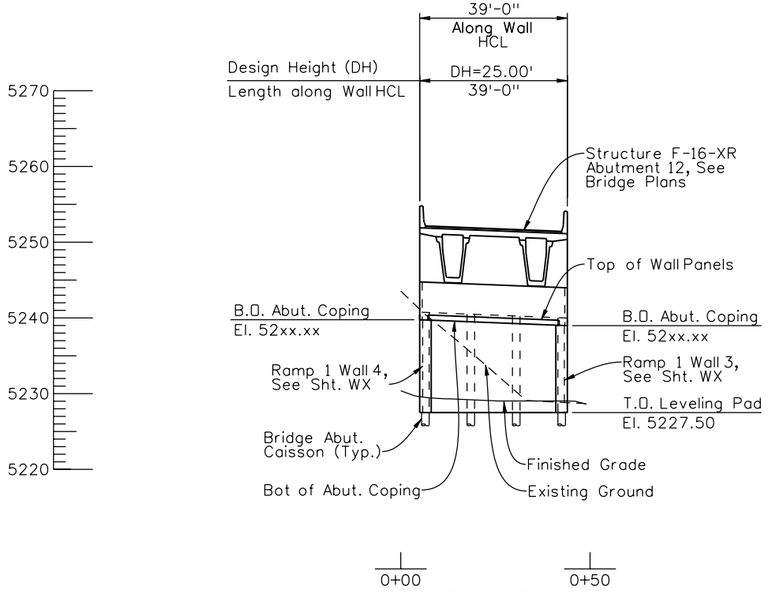

ELEVATION
RAMP 1 WALL 3B

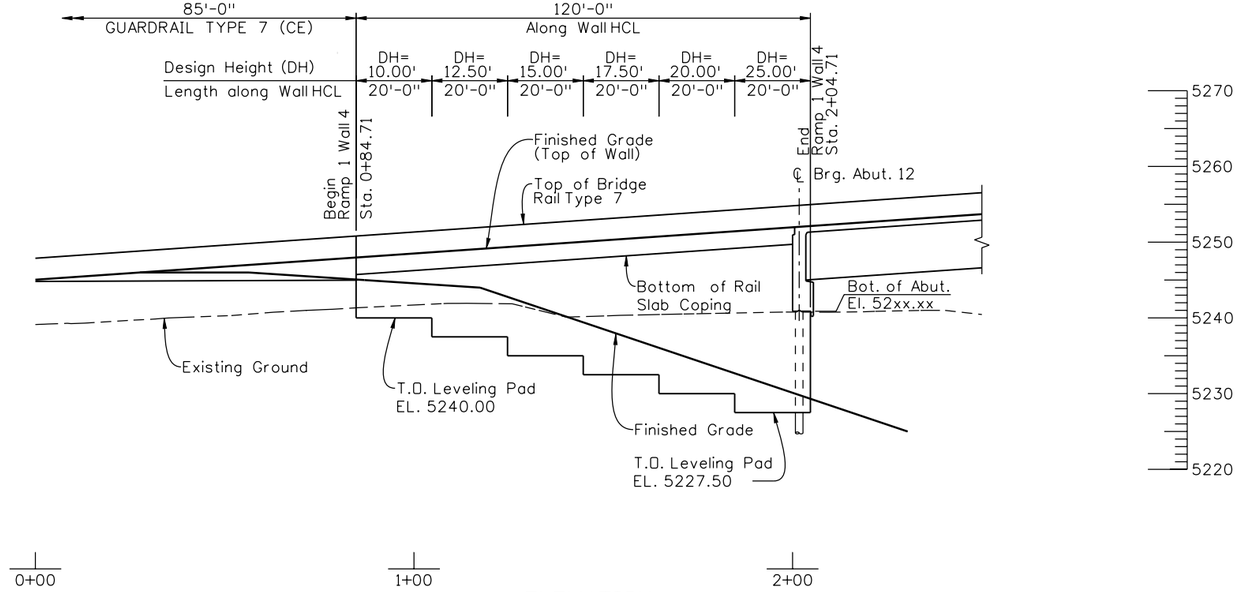

ELEVATION
RAMP 1 WALL 4

Print Date: 9/27/2010	Sheet Revisions	Colorado Department of Transportation	As Constructed
File Name: 16311WALL_PH2_F-16-DV_Ramp1Wall4GPE.dgn	Date: Comments: Init.	2000 South Holly Street, Denver, CO 80222	No Revisions:
Horiz. Scale: 1:40 Vert. Scale: As Noted		Phone: 303-972-9112 FAX: 303-972-9114	Revised:
Unit Information Unit Leader Initials		Region 6 RLB	Void:

I-25/SANTA FE INTERCHANGE
RAMP 1 WALL 3B & WALL 4
GENERAL LAYOUT

Designer: P. STEIN	Structure Numbers	F-16-DX	Project No./Code: IM 0254-394
Detailer: R. DILLON			16311
Sheet Subset: WALL	Subset Sheets: W25 of XX		Sheet Number 207

Design: INITIAL PRS DATE 03/10 Designed By, Checked By
Detail: INITIAL RAD DATE 03/10 Detailed By, Checked By
Quantities: INITIAL DATE Quantities By, Checked By
Revision Dates (Preliminary Stage Only)

Ricdi 4:04:23 PM K:\08276\16311\Phase 2\Bridge\Drawings\16311WALL_PH2_F-16-DV_Ramp1Wall4GPE.dgn
9/27/2010 CDOT-PDFDraftQuality_XM.pltcfg CDOT-PenTable.tbl

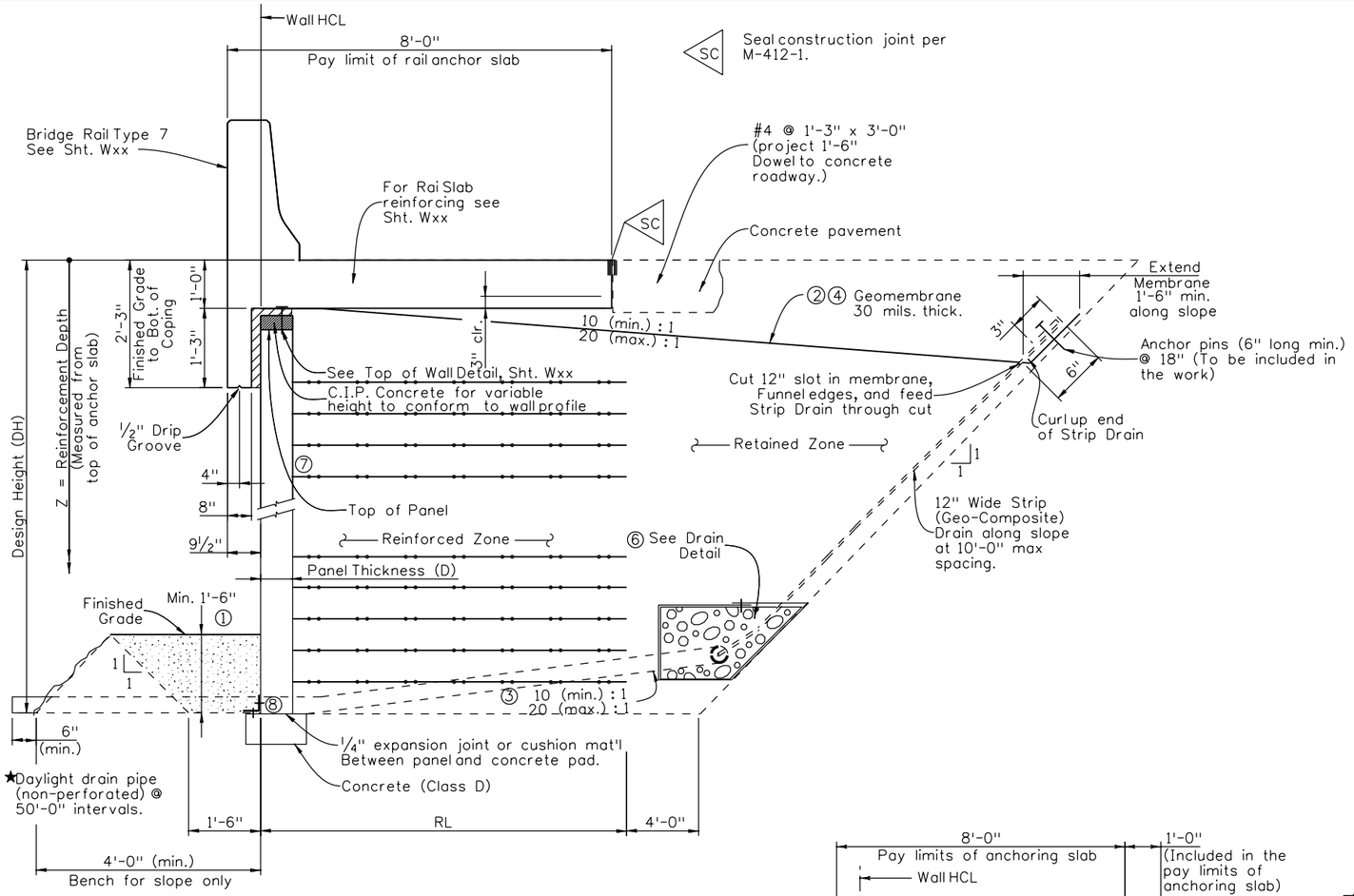

TYPICAL SECTION

I-25 SB Wall 1, I-25 SB Wall 2
I-25 NB Wall 1, I-25 NB Wall 2
Ramp 2 Wall Sta. xxx+xx.xx
to Sta. xxx+xx.xx

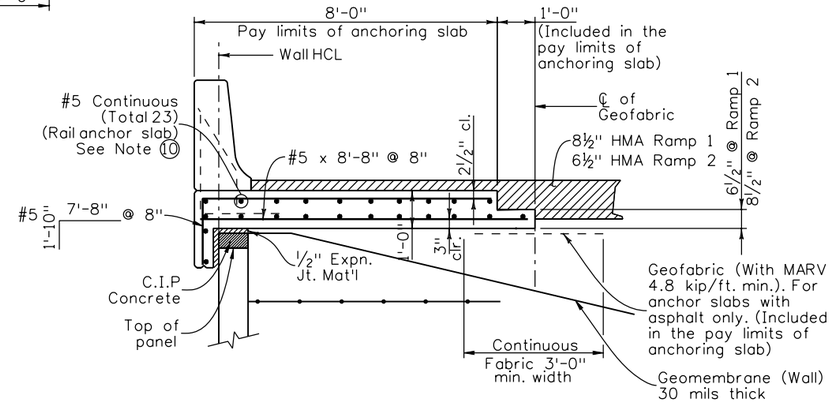

ANCHORING SLAB DETAIL WITH ASPHALT ROADWAY

Ramp 1 & Ramp 2 Sta. XXX+XX.XX to Sta. XXX+XX.XX

NOTES:

① 1'-6" (min.) Structure Backfill (Class 2) is required for erosion control and to conceal and protect a stepped leveling pad. The cost for this material shall be included in the cost for Structure Backfill (Class 1).

② Geomembrane and pipe collector are required. The cost of Geomembrane, Strip Drains, Geotextile, Collector Pipe, Non-perforated Daylight Pipe and all micellaneous items required to construct the drain system shall be included in Item 206 - Mechanical Reinforcement of Soil.

③ Soil Reinforcement may be adjusted to accommodate pipe installation.

④ The Geomembrane shall be installed with a constant slope from the facing panel all the way to the back in conjunction with the geo-composite down drains at and along the temporary cut slope. The geo-composite drains that connect to the water collector system shall be minimum 12" in width at 10' maximum spacing.

⑤ All Pipes and Joints shall be corrugated H.D.P.E.

⑥ One side temporary forming board is required to build Drain detail. The filter material shall be wrapped with Erosion Control Geotextiles (Class 2).

⑦ The connectors between the precast panels and the soil reinforcements shall be provided by the Contractor according to the project specification.

⑧ Each Bolt and angle system includes L 5" X 5" X 1" and H.S. bolt ⅞" Ø X 4" (min.). Each 10'-0" width panel shall have two bolt and angle systems (To be included in the pay item Precast Panel). Alternate system is to be designed by the Contractor with approval by the Engineer at no additional cost to the project.

⑨ All concrete reinforcement shall be epoxy coated or equivalent WWF (Galvanized or epoxy coated).

RAIL ANCHOR SLAB WITH CONCRETE ROADWAY QUANTITIES (for Information only)

ITEM NO.	DESCRIPTION	UNIT	QUANTITY
601	CONCRETE CLASS D	C.Y./Ft.	0.31
602	REINFORCING STEEL (EPOXY COATED)	Lb./Ft.	52.00

Revision Dates	
7/10	(Preliminary Stage Only)

Quantities	INITIAL	DATE
Quantities By	XXX	MM/YY
Checked By	XXX	MM/YY

Detail	INITIAL	DATE
Detailed By	XXX	MM/YY
Checked By	XXX	MM/YY

Design	INITIAL	DATE
Designed By	XXX	MM/YY
Checked By	XXX	MM/YY

Ricdi 4:04:29 PM K:\08276\16311\Phase 2\Bridge\Drawings\16311WALL_PH2_WallDetails01.dgn
9/27/2010 CDOT-PDFDraftQuality_XM.pltcfg CDOT-PenTable.tbl

Print Date: 9/27/2010
File Name: 16311WALL_PH2_WallDetails01.dgn
Horiz. Scale: 1:1 Vert. Scale: As Noted
Unit Information Unit Leader Initials

FELSBURG HOLT & ULLEVIG 6300 South Syracuse Way Centennial, CO 80111 25 years of engineering paths to transportation solutions

Sheet Revisions		
Date:	Comments	Init.

Colorado Department of Transportation
2000 South Holly Street
Denver, CO 80222
Phone: 303-972-9112 FAX: 303-972-9114
Region 6 RLB

As Constructed
No Revisions:
Revised:
Void:

I-25/SANTA FE INTERCHANGE
MSE WALL DETAILS (1 OF 4)

Designer:	P. STEIN	Structure Numbers	MULTIPLE
Detailer:	M. EBERLY		
Sheet Subset:	WALL	Subset Sheets:	W26 of XX

Project No./Code
IM 0254-394
16311
Sheet Number 208

			LTDS (lb/ft)													
DH	RL	BP	Z=1.25	3.75	6.25	8.75	11.25	13.75	16.25	18.75	21.25	23.75	26.25	28.75	31.25	33.75
5.00	8.00	1070	1346	1190												
7.50	8.00	1411	1227	1314	1408											
10.00	8.00	1849	1179	1317	1462	1626										
12.50	8.75	2320	1179	1317	1462	1626	1845									
15.00	10.50	2691	1179	1317	1462	1626	1845	2043								
17.50	12.25	3064	1179	1317	1462	1626	1845	2043	2220							
20.00	14.00	3440	1179	1317	1462	1626	1845	2043	2220	2373						
22.50	15.75	3818	1179	1317	1462	1626	1845	2043	2220	2373	2568					
25.00	17.50	4197	1179	1317	1462	1626	1845	2043	2220	2373	2568	2825				
27.50	19.25	4577	1179	1317	1462	1626	1845	2043	2220	2373	2568	2825	3083			
30.00	21.00	4958	1179	1317	1462	1626	1845	2043	2220	2373	2568	2825	3083	3343		
32.50	22.75	5340	1179	1317	1462	1626	1845	2043	2220	2373	2568	2825	3083	3343	3602	
35.00	24.50	5722	1179	1317	1462	1626	1845	2043	2220	2373	2568	2825	3083	3343	3602	3863

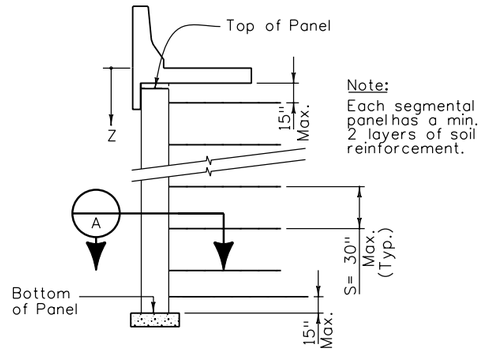

SEGMENTAL PANEL REINFORCEMENT PATTERN

(Segmental Panel not shown for clarity)

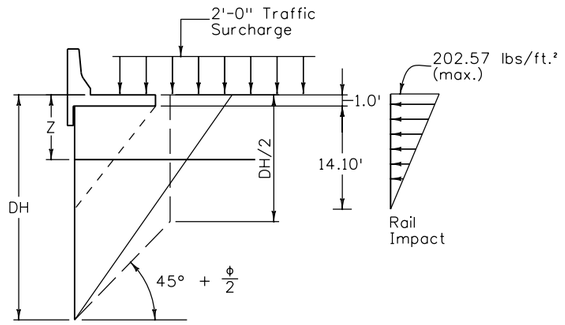

APPLICATION DIAGRAM

The 10 kip vehicular Horizontal Impact Load is applied as per the loading diagram. The rail impact load is not included in the calculation of the Bearing Pressure, BP.

ABBREVIATIONS

DH = Design Height (ft.)
RL = Reinforcement Length (ft.)
BP = Bearing Pressure (psf)
LTDS = Long Term Design Strength of Ribbed Steel Reinforcing Strips per Linear Foot of Wall Length (lbs. per foot). Value based on 2'-6" On-Center Reinforcing Strip spacing, vertically.

NOTES:

The contractor shall be responsible for the design and construction of the metal Reinforced MSE Walls based upon these drawings and revision of project Specification Section 504 - Concrete Panel facing MSE Wall. This project requires Temporary walls to remain in place, which will be buried in future phases by Permanent walls. The contractor shall design both the Temporary walls and the future Permanent walls in accordance with the Project Special Provisions. The wall design for both conditions shall be designed for the required stability and serviceability as specified in the Project Special Provisions.

LTDS based on dead load MSE Wall, live load surcharge and dead load rail slab system with rail impact (if applicable).

Subsurface Drain Outlets, 4"Ø Geotextile wrapped Pipe Collector and Impervious Membrane shall not be paid for separately, but shall be included in the cost of Item 206, Mechanical Reinforcement of soil.

Horizontal location of the Subsurface Drain outlets shall be shown on the retaining wall shop drawings. Outlets shall be centered in wall panels horizontally

See sheet Wxx for additional information on Structure Excavation and Backfill Limits.

The design for the MSE Walls shall incorporate all vanegrate inlet and storm pipe locations. See wall general layouts, drainage plans, and Sheet Wxx for more information.

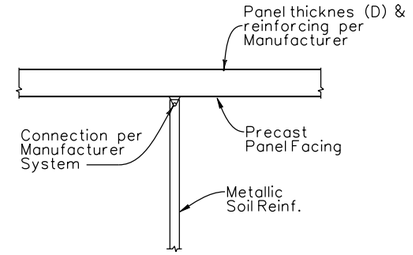

SECTION A

Revision Dates (Preliminary Stage Only)
7/10

Design			Detail			Quantities		
	INITIAL	DATE		INITIAL	DATE		INITIAL	DATE
Designed By	XXX	MM/YY	Detailed By	XXX	MM/YY	Quantities By	XXX	MM/YY
Checked By	XXX	MM/YY	Checked By	XXX	MM/YY	Checked By	XXX	MM/YY

Ricdl 4:17:14 PM K:\08276\16311\Phase 2\Bridge\Drawings\16311WALL_PH2_WallDetails02.dgn
9/27/2010 CDOT-PDFDraftQuality_XM.pltcfg CDOT-PenTable.tbl

Print Date: 9/27/2010	Sheet Revisions		
File Name: 16311WALL_PH2_WallDetails02.dgn	Date:	Comments	Init.
Horiz. Scale: 1:1 Vert. Scale: As Noted			
Unit Information Unit Leader Initials			
FELSBURG HOLT & ULLEVIG 6300 South Syracuse Way Centennial, CO 80111 25 years of engineering paths to transportation solutions			

Colorado Department of Transportation
2000 South Holly Street
Denver, CO 80222
Phone: 303-972-9112 FAX: 303-972-9114
Region 6 RLB

As Constructed	I-25/SANTA FE INTERCHANGE MSE WALL DETAILS (2 OF 4)			Project No./Code
No Revisions:				IM 0254-394
Revised:	Designer: P. STEIN	Structure Numbers	MULTIPLE	16311
Void:	Detailer: M. EBERLY			
	Sheet Subset: WALL	Subset Sheets: W27 of XX		Sheet Number 209

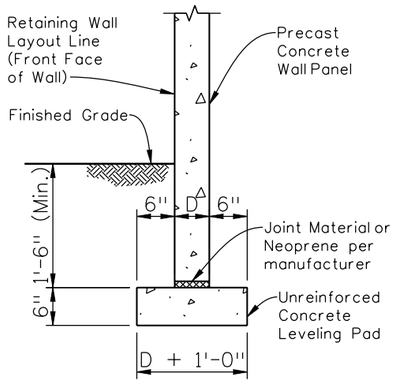

LEVELING PAD DETAIL

D = Panel Thickness

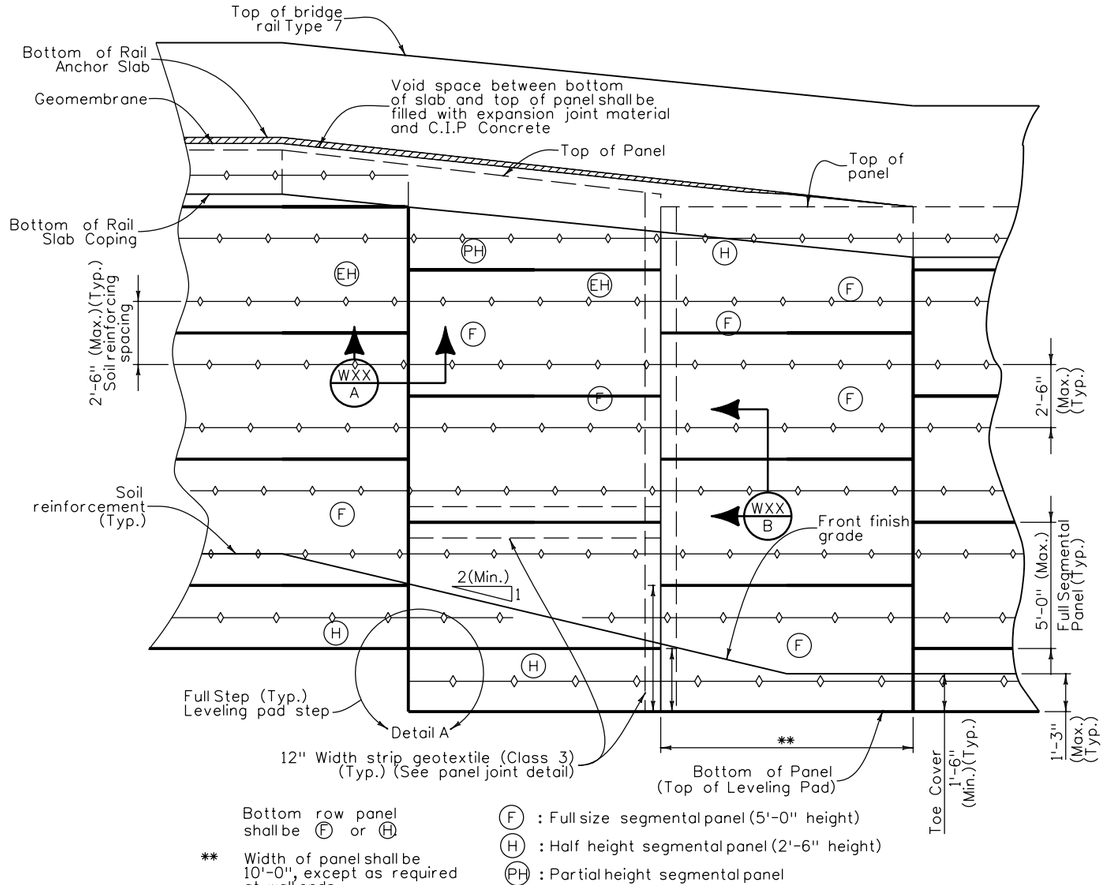

Bottom row panel shall be (F) or (H)

** Width of panel shall be 10'-0", except as required at wall ends

(F) : Full size segmental panel (5'-0" height)

(H) : Half height segmental panel (2'-6" height)

(PH) : Partial height segmental panel

(EH) : Extended height segmental panel (top row panel shall be 7'-0" (Max.) height)

TYPICAL WALL ELEVATION

Notes:

1. Cast-in-place Leveling Block and Leveling Pad shall be Concrete Class D (Wall).
2. Joint Material, Neoprene, Leveling Pad Concrete, Leveling Block Concrete & #4x10" Dowels shall not be paid for separately, but shall be included in the cost of Item 504 - Panel Facing.
3. Geotextile Fabric and Precast Concrete Element for Corner details shall be included in the cost of Item 504 - Panel Facing.

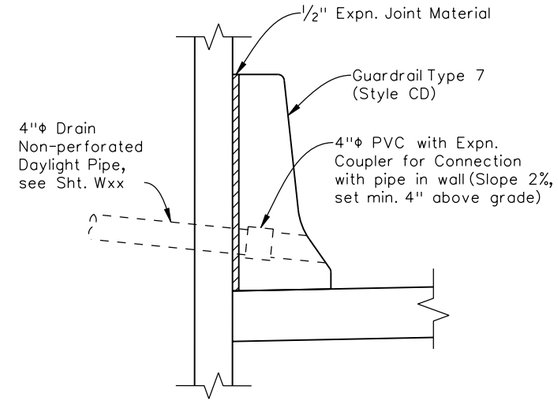

RAMP 2 WALL DAYLIGHT DRAIN PIPE THROUGH GUARDRAIL

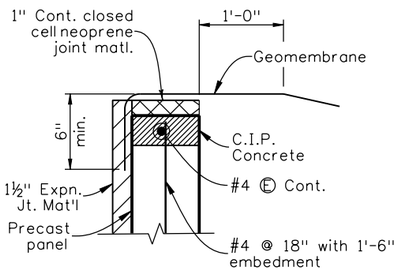

TOP OF WALL DETAIL

DETAIL A

LEVELING PAD AND STEP QUANTITIES
(For Information only)

	ITEM NO.	DESCRIPTIONS	UNIT	QUANTITIES
LEVELING PAD	601	Concrete Class D	C.Y./Ft.	0.028
HALF STEP	601	Reinforcing Steel (Epoxy Coated)	Lb/step	16.50
	602	Concrete Class D	C.Y./step	0.12
FULL STEP	601	Reinforcing Steel (Epoxy Coated)	Lb/step	19.10
	602	Concrete Class D	C.Y./step	0.093

Based on 6" nominal panel depth (D)

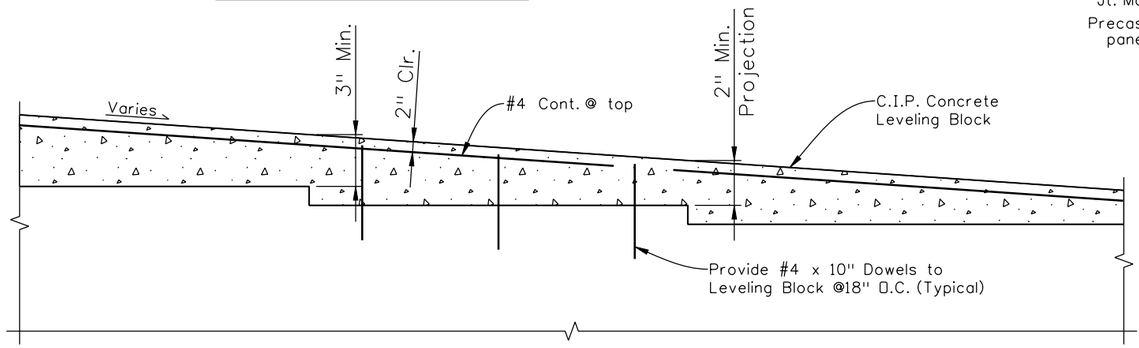

LEVELING BLOCK ELEVATION

Revision Dates (Preliminary Stage Only): 7/10

Design	INITIAL	DATE	Detail	INITIAL	DATE	Quantities	INITIAL	DATE
Designed By	XXX	MM/YY	Detailed By	XXX	MM/YY	Quantities By	XXX	MM/YY
Checked By	XXX	MM/YY	Checked By	XXX	MM/YY	Checked By	XXX	MM/YY

Ricdi 4:04:42 PM K:\08276\16311\Phase 2\Bridge\Drawings\16311WALL_PH2_WallDetails03.dgn
9/27/2010 CDOT-PDFDraftQuality_XM.pltcfg CDOT-PenTable.tbl

Print Date: 9/27/2010
File Name: 16311WALL_PH2_WallDetails03.dgn
Horiz. Scale: 1:1 Vert. Scale: As Noted
Unit Information Unit Leader Initials

FELSBURG HOLT & ULLEVIG 6300 South Syracuse Way Centennial, CO 80111 25 years of engineering paths to transportation solutions

Sheet Revisions		
Date:	Comments	Init.

Colorado Department of Transportation
2000 South Holly Street
Denver, CO 80222
Phone: 303-972-9112 FAX: 303-972-9114
Region 6 RLB

As Constructed
No Revisions:
Revised:
Void:

I-25/SANTA FE INTERCHANGE
MSE WALL DETAILS (3 OF 4)

Designer: P. STEIN
Detailer: M. EBERLY
Sheet Subset: WALL
Structure Numbers: MULTIPLE
Subset Sheets: W28 of XX

Project No./Code: IM 0254-394
16311
Sheet Number 210

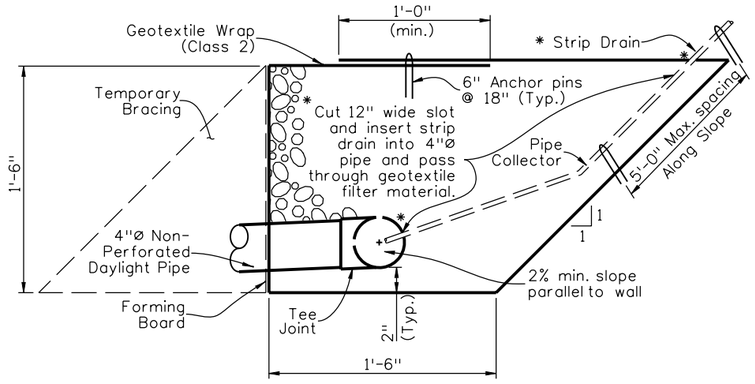

Filter Material (Class B) to be included in Item No. 206 Structure Backfill (Class 1).
* Geotextile fabric flow rate = 140 gpm/ sq ft (min.) and core flow rate of 21 gpm/ft (min.)

DRAIN DETAIL

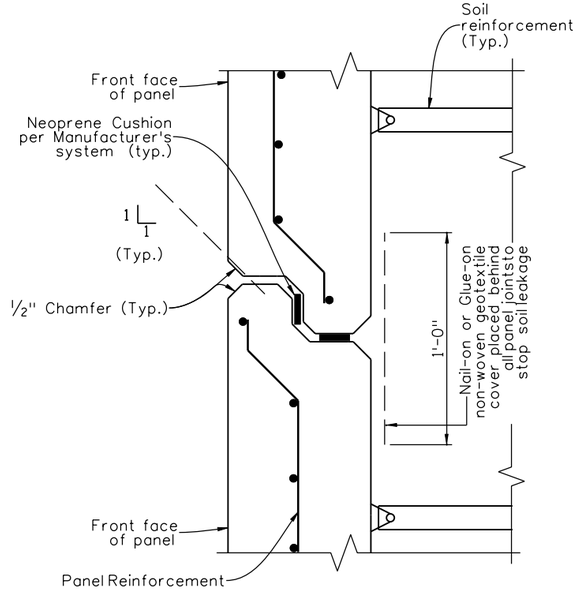

HORIZONTAL PANEL JOINT DETAIL SECTION (Wxx / B)

(Soil reinforcement shown for illustration purposes.)

NOTES:

1. Panel lifting hook embedments and related hardware shall be furnished, sized, and placed by fabricator (per Contractor's design) for each individual panel.
2. The acceptable panel joint material between panels shall be proposed by the contractor with approval of the Engineer, and shall be included in the cost of Item 504 Precast Panel Facing.
3. Test panel as specified in specification shall be included in cost of item 504 Precast Panel Facing provided by the contractor.
4. Bolts and angle system shall be in accordance with ASTM A36, Grade 36. All hardware shall be galvanized.
5. 2" clr. for rebar is typical except as noted.
6. Sawing of panels is acceptable in areas to meet existing ground if needed with approval of the engineer.
7. The tolerance on panel thickness shall not exceed ± ¼".
8. Any flexural cracks, sags, or cambers greater than 0.5" will be considered evidence of mishandling, overloading, or exceeding allowable tolerances, and may be cause for rejecting panels at the Engineer's discretion.
9. Care must be taken to ensure proper cleaning of construction debris off the tops of the panels and consolidation of concrete mortar under the edges of the panels. Water, dirt or other debris on top of the panels will inhibit the bond of the cast-in-place concrete. It is also important that adequate space (min. 1" x 2") is provided for the concrete to fill the space under the panel as the slab concrete is placed. Panel lengths and width shall be determined by the Contractor and shown on the shop plans.
10. The Contractor is responsible for the stability of the panels during shipping, delivery, inspection, and anytime during construction. Erected panels shall be uniformly supported along the length of the panel. The contractor shall provide an installation and erection plan to the engineer for information only at no additional cost.
11. Panel supplier may submit alternative horizontal and/or vertical joint detail in shop drawings for Engineer's approval.

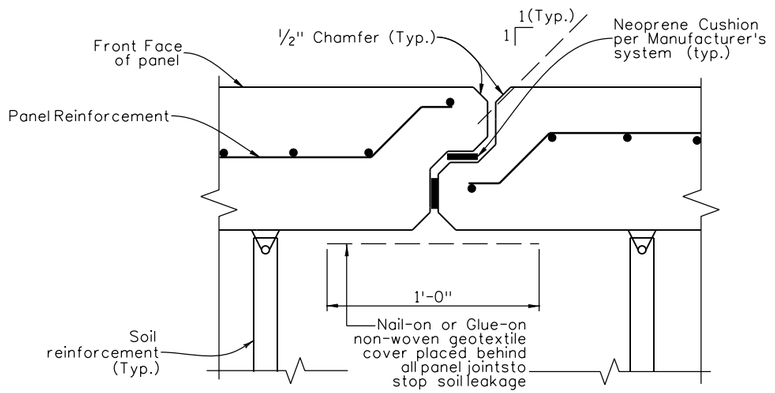

VERTICAL PANEL JOINT SECTION (Wxx / A)

(Soil reinforcement shown for illustration purposes.)

Revision Dates (Preliminary Stage Only): 7/10

Design	INITIAL	DATE
Designed By	XXX	MM/YY
Checked By	XXX	MM/YY

Detail	INITIAL	DATE
Detailed By	XXX	MM/YY
Checked By	XXX	MM/YY

Quantities	INITIAL	DATE
Quantities By	XXX	MM/YY
Checked By	XXX	MM/YY

Print Date: 9/27/2010
File Name: 16311WALL_PH2_WallDetails04.dgn
Horiz. Scale: 1:1 Vert. Scale: As Noted
Unit Information Unit Leader Initials

FELSBURG HOLT & ULLEVIG
6300 South Syracuse Way
Centennial, CO 80111
25 years of engineering paths to transportation solutions

Sheet Revisions		
Date:	Comments	Init.

Colorado Department of Transportation
DEPARTMENT OF TRANSPORTATION
2000 South Holly Street
Denver, CO 80222
Phone: 303-972-9112 FAX: 303-972-9114
Region 6 RLB

As Constructed
No Revisions:
Revised:
Void:

I-25/SANTA FE INTERCHANGE
MSE WALL DETAILS (4 OF 4)

Designer:	P. STEIN	Structure Numbers	MULTIPLE
Detailer:	M. EBERLY		
Sheet Subset:	WALL	Subset Sheets:	W29 of XX

Project No./Code: IM 0254-394
16311
Sheet Number 211

Ricdi 4:04:48 PM K:\08276\16311\Phase 2\Bridge\Drawings\16311WALL_PH2_WallDetails04.dgn
9/27/2010 CDOT-PDFDraftQuality_XM.pltcfg CDOT-PenTable.tbl

QUANTITIES (FOR INFORMATION ONLY)
BRIDGE RAIL TYPE 7 (SPECIAL)

DESCRIPTION	UNIT	PER LINEAR FOOT
CONCRETE CLASS D	CY	0.15
REINFORCING STEEL (EPOXY)	LB	32.4

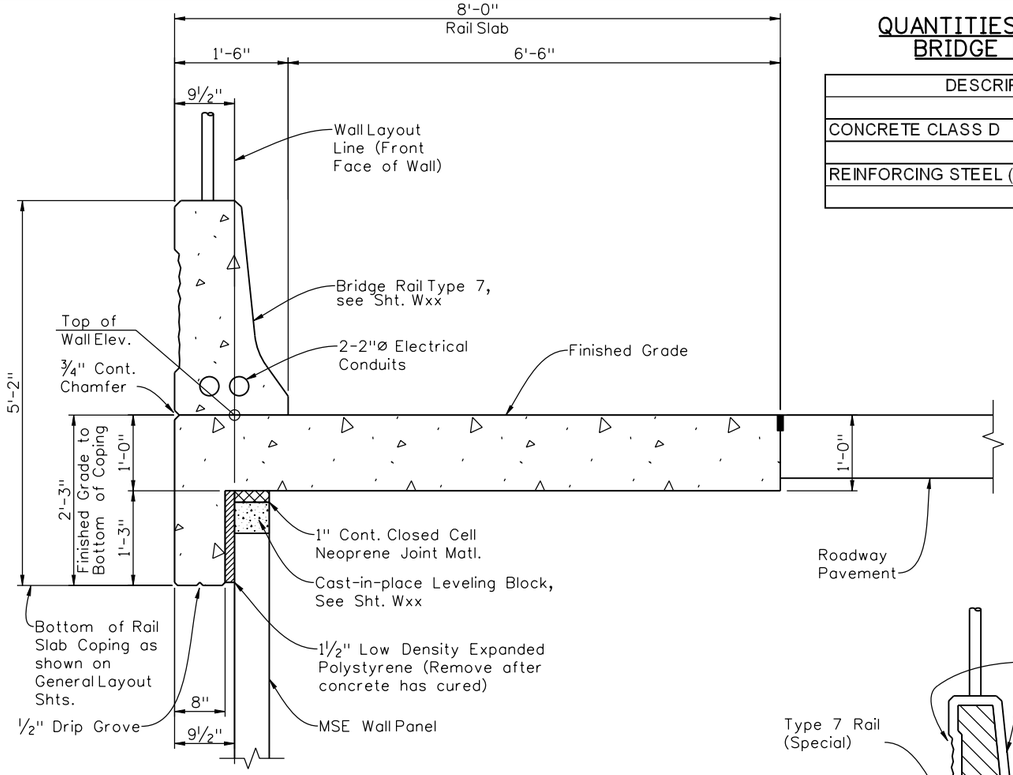

RAIL SLAB & BRIDGE RAIL DIMENSIONS

TRANSVERSE CONTRACTION JOINTS

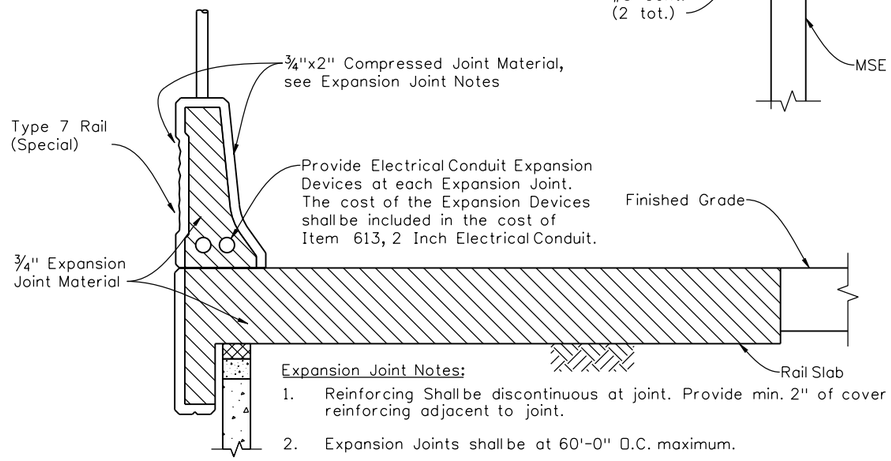

Expansion Joint Notes:

1. Reinforcing Shall be discontinuous at joint. Provide min. 2" of cover for reinforcing adjacent to joint.
2. Expansion Joints shall be at 60'-0" D.C. maximum.
3. Rail Slab Expansion joints shall match locations of roadway pavement joints where applicable, coordinate with Concrete Jointing Plans. Provide Expansion Couplings at electrical conduit.
4. Compressed Joint Material shall be pre-compressed, chemically resistant, open cell polyurethane foam sealant, impregnated with a water-repellent material, with adhesive backing on both sides. The Joint Material shall be epoxied in place,and all splices sealed, as recommended by the supplier of the Joint Material. The cost shall be included in the cost of Item 601, Class D Concrete.

Acceptable Compressed Joint Material Alternatives:
Will-Seal
Seal-Mate #517
Poly-Tite "N"

BRIDGE RAIL/RAIL SLAB EXPANSION JOINT

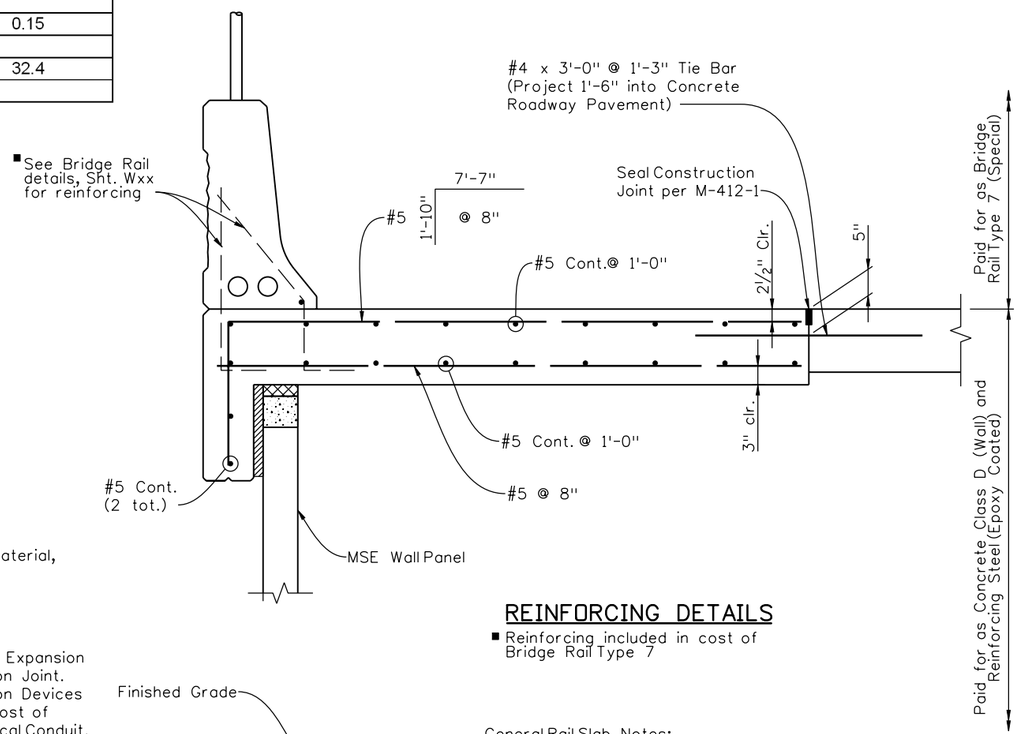

REINFORCING DETAILS

■ Reinforcing included in cost of Bridge Rail Type 7

General Rail Slab Notes:

1. All Bridge Rail Concrete shall be Class D (Wall).
2. Bridge Rail Concrete and Epoxy Reinforcing Steel shall conform to the requirements of Sections 601 and 602. Payment shall be made under item 606, Bridge Rail Type 7.
3. The surface of the rail shall be tested with a 10 foot straight edge laid along the surface in the longitudinal direction. Deviation of the concrete surface from the straight edge shall be less than ¼" plus allowance for roadway horizontal and vertical curvature, if any.
4. Concrete cover shall be 2" unless noted otherwise.
5. Bridge Rail shall be constructed plumb.
6. Coordinate Rail Slab Contraction & Expansion joints with roadway pavement joints. Rail Slab Joints shall match locations of roadway pavement joints where possisble. See Concrete Jointing Plans.
7. Top finish of Rail Slab shall be tined per CDOT Standard Specifications for Road and Bridge Construction Section 412.12 (d).

Design Data

Reinforced Concrete:

Class D Concrete F'c = 4,500 psi
Reinforcing Steel Fy = 60,000 psi

Revision Dates (Preliminary Stage Only)

Design	INITIAL	DATE	Detail	INITIAL	DATE	Quantities	INITIAL	DATE
Designed By	WJM	09/10	Detailed By	RAD	09/10	Quantities By	PRS	
Checked By			Checked By			Checked By		

Print Date: 9/27/2010
File Name: 16311WALL_PH2_WallDetails06.dgn
Horiz. Scale: 1:1 Vert. Scale: As Noted
Unit Information Unit Leader Initials

FELSBURG HOLT & ULLEVIG 6300 South Syracuse Way Centennial, CO 80111 25 years of engineering paths to transportation solutions

Sheet Revisions		
Date:	Comments	Init.

Colorado Department of Transportation
2000 South Holly Street
Denver, CO 80222
Phone: 303-972-9112 FAX: 303-972-9114
Region 6 RLB

As Constructed
No Revisions:
Revised:
Void:

I-25/SANTA FE INTERCHANGE
RAIL SLAB DETAILS

Designer: W. MARCATO
Detailer: R. DILLON
Sheet Subset: WALL
Structure Numbers: MULTIPLE
Subset Sheets: W30 of XX

Project No./Code: IM 0254-394
16311
Sheet Number 212

R:\da 4:04:54 PM K:\08276\16311\Phase 2\Bridge\Drawings\16311WALL_PH2_WallDetails06.dgn
9/27/2010 CDOT-PDFDraftQuality_XM.pltcfg CDOT-PenTable.tbl

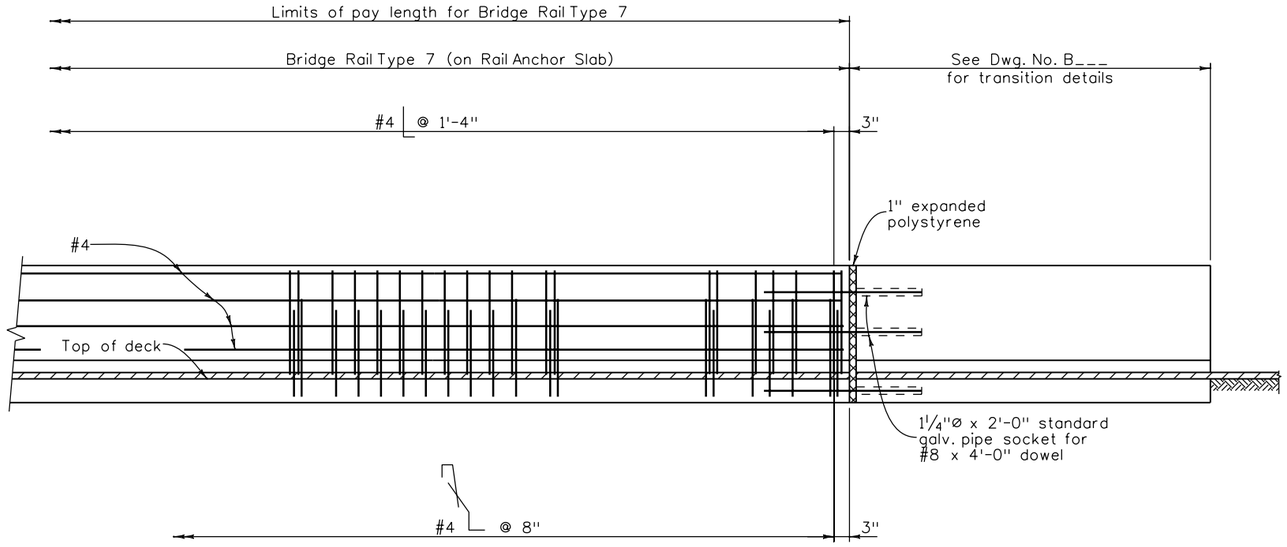

ELEVATION

TRANSITION TO CONNECT BRIDGE RAIL TYPE 7 TO GUARD RAIL

NOTES:

Backfill wingwalls and retaining walls before barrier is placed.

All bridge rail concrete shall be Class D.

Longitudinal reinforcement shall stop at all expansion joints.

Bridge rail shall be constructed plumb.

See Std. M-606-1 and M-606-13 for Guard Rail Type 3 details and details of transition.

Concrete and reinforcing steel shall conform to the requirements of Sections 601 and 602. Payment will be made under Item 606, Bridge Rail Type 7.

The surface of the rail shall be tested with a 10 foot straightedge laid along the surface in the longitudinal direction. Deviation of the concrete surface from the straightedge shall be less than 1/4" plus allowance for roadway horizontal and vertical curvature, if any.

DESIGN DATA

Reinforced Concrete:

Class D Concrete: f'_c = 4,500 psi
Reinforcing Steel: f_y = 60,000 psi

INFORMATION ONLY

Description	Unit	Per Lin. Ft.
Concrete Class D	Cu. Yd.	0.12
Reinforcing Steel (Epoxy)	Lb.	16.2

▲ Reinf. included in cost of Item 606 - Bridge Rail Type 7

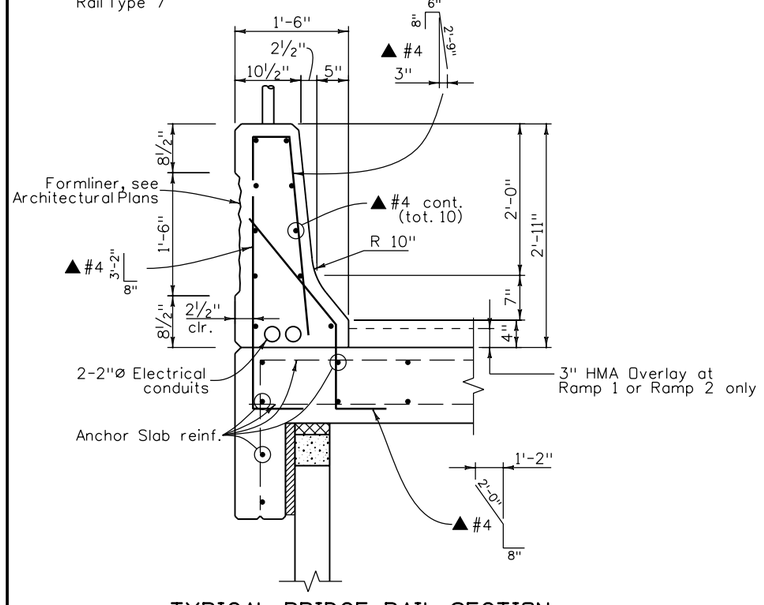

TYPICAL BRIDGE RAIL SECTION

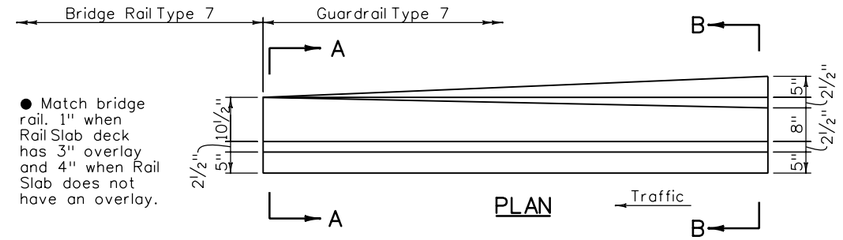

PLAN

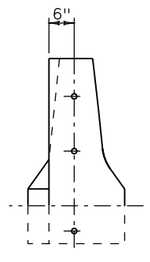

END

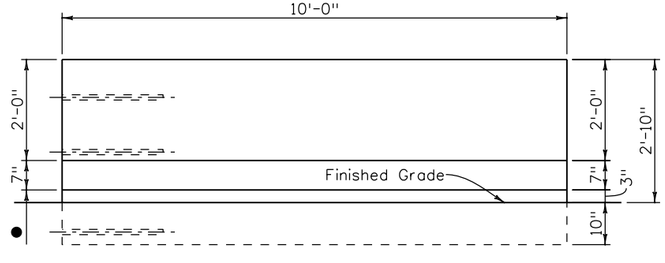

ELEVATION

BRIDGE RAIL TYPE 7 TO ROADWAY SHOULDER TYPE 7 END TRANSITION

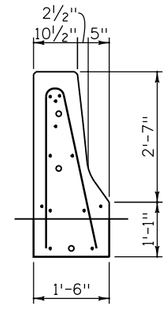

SECTION A-A

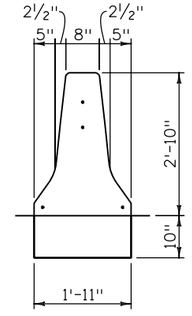

SECTION B-B

Revision Dates	8/95	10/98	3/99	11/99	5/00	5/01	4/02	3/07
(Preliminary Stage Only)								

Quantities	INITIAL	DATE
Quantities By	XXX	MM/YY
Checked By	XXX	MM/YY

Detail	INITIAL	DATE
Detailed By	XXX	MM/YY
Checked By	XXX	MM/YY

Design	INITIAL	DATE
Designed By	XXX	MM/YY
Checked By	XXX	MM/YY

Ricdi 4:05:00 PM K:\08276\16311\Phase 2\Bridge\Drawings\16311WALL_PH2_BridgeRail01.dgn
9/27/2010 CDOT-PDFDraftQuality_XM.pltcfg CDOT-PenTable.tbl

Print Date: 9/27/2010
File Name: 16311WALL_PH2_BridgeRail01.dgn
Horiz. Scale: 1:1 Vert. Scale: As Noted
Unit Information Unit Leader Initials

FELSBURG HOLT & ULLEVIG
6300 South Syracuse Way
Centennial, CO 80111
25 years of engineering paths to transportation solutions

Sheet Revisions		
Date:	Comments	Init.

Colorado Department of Transportation
DEPARTMENT OF TRANSPORTATION
2000 South Holly Street
Denver, CO 80222
Phone: 303-972-9112
Fax: 303-972-9114
Region 6

Measured and paid for as Guardrail Type 7. See M-606-13 sheet 2, transition detail, for reinforcement information.

RLB

As Constructed
No Revisions:
Revised:
Void:

I-25/SANTA FE INTERCHANGE
BRIDGE RAIL TYPE 7

Designer:	P. STEIN	Structure Numbers	MULTIPLE
Detailer:	M. EBERLY		
Sheet Subset:	WALL	Subset Sheets:	W31 of XX

Project No./Code	
IM 0254-394	
16311	
Sheet Number	213

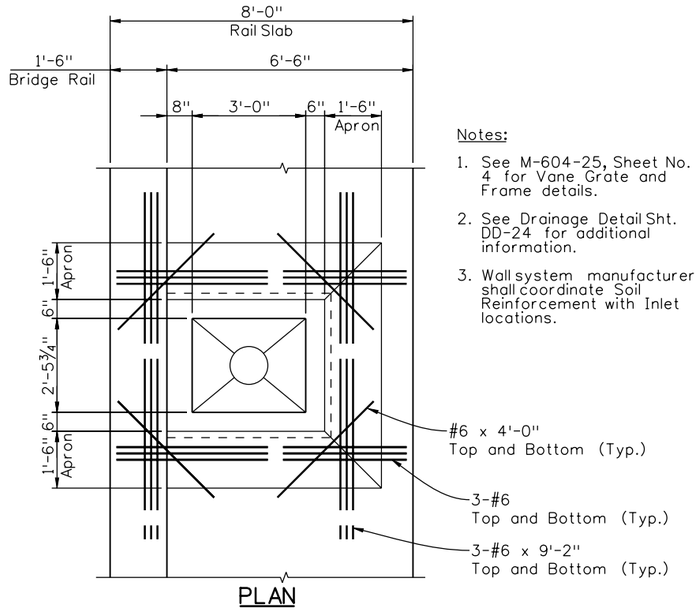

PLAN

Notes:

1. See M-604-25, Sheet No. 4 for Vane Grate and Frame details.
2. See Drainage Detail Sht. DD-24 for additional information.
3. Wall system manufacturer shall coordinate Soil Reinforcement with Inlet locations.

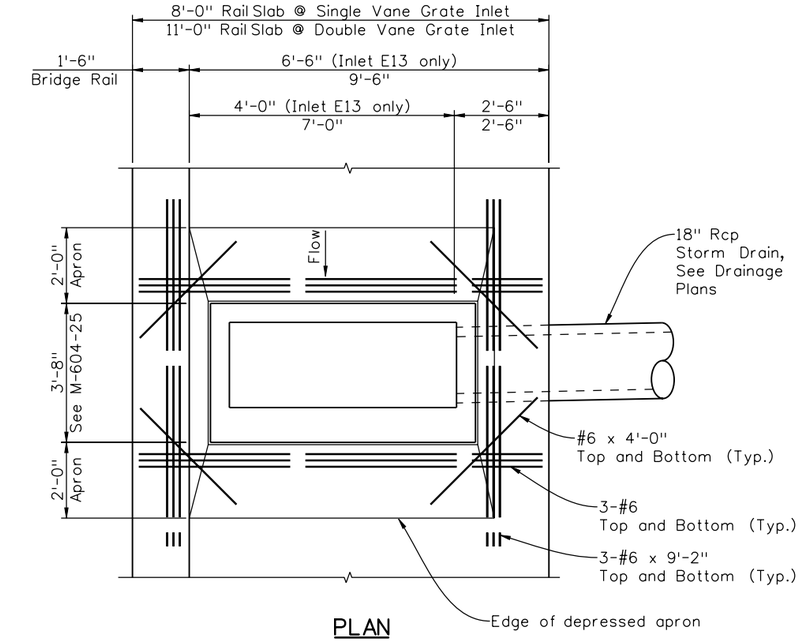

PLAN

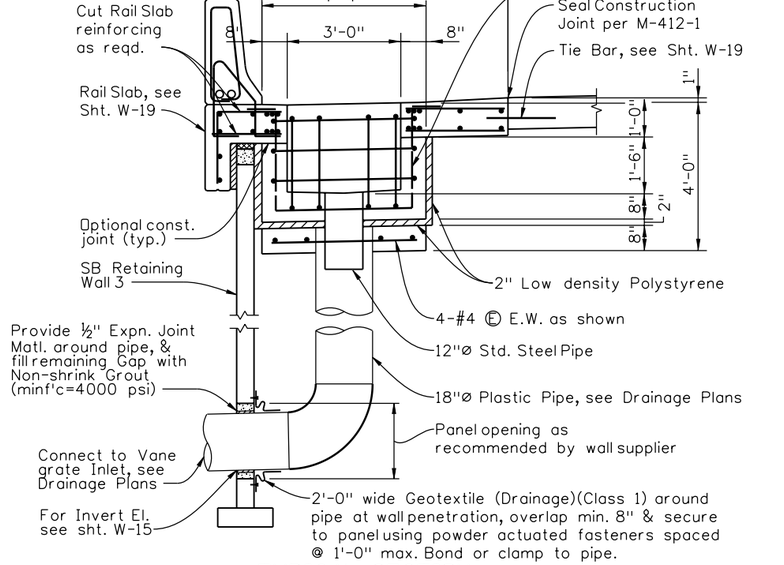

TYPICAL SECTION

VANE GRATE INLET (SPECIAL) XXXXX

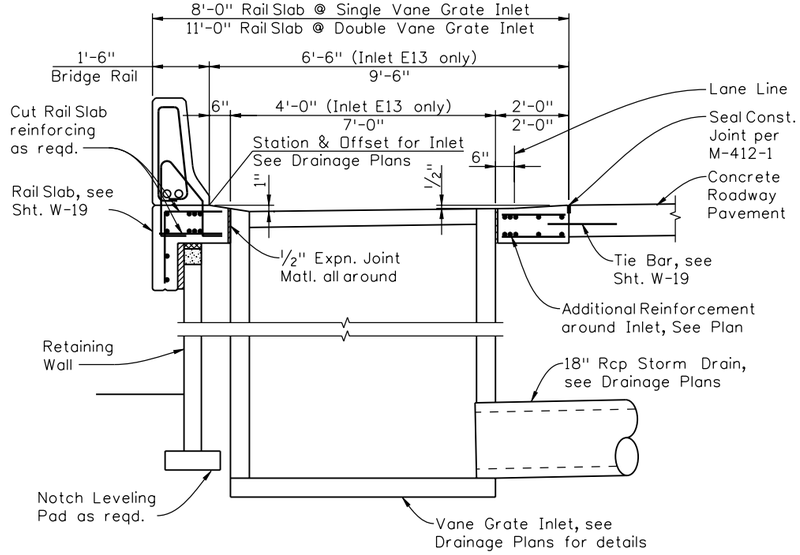

TYPICAL SECTION

VANE GRATE INLET XXXXX

Revision Dates (Preliminary Stage Only)

Design				Detail				Quantities			
	INITIAL	DATE		INITIAL	DATE		INITIAL	DATE
Designed By	PRS	03/10	Detailed By	RAD	03/10	Quantities By		
Checked By			Checked By	PRS		Checked By		

CDOT-PDFDraftQuality_XM.pltcfg CDOT-PenTable.tbl

Ricall 4:05:05 PM K:\08276\16311\Phase 2\Bridge\Drawings\16311WALL_PH2_Inlet01.dgn
9/27/2010

Print Date: 9/27/2010
File Name: 16311WALL_PH2_Inlet01.dgn
Horiz. Scale: 1:1 Vert. Scale: As Noted
Unit Information Unit Leader Initials

Summit Engineering Group, Inc.
CONSULTING STRUCTURAL ENGINEERS
6300 South Syracuse Way Suite 330
Centennial, CO 80111
Bittelo, CO 80302
Engineering paths to transportation solutions

Sheet Revisions		
Date:	Comments	Init.

Colorado Department of Transportation
DEPARTMENT OF TRANSPORTATION
2000 South Holly Street
Denver, CO 80222
Phone: 303-972-9112 FAX: 303-972-9114
Region 6 RLB

As Constructed

No Revisions:

Revised:

Void:

I-25/SANTA FE INTERCHANGE
RAIL SLAB AT DRAINAGE INLET
DETAILS

Designer:	P. STEIN	Structure Numbers	X
Detailer:	R. DILLON		X
Sheet Subset:	WALL	Subset Sheets:	W32 of XX

Project No./Code

IM 0254-394

16311

Sheet Number 214

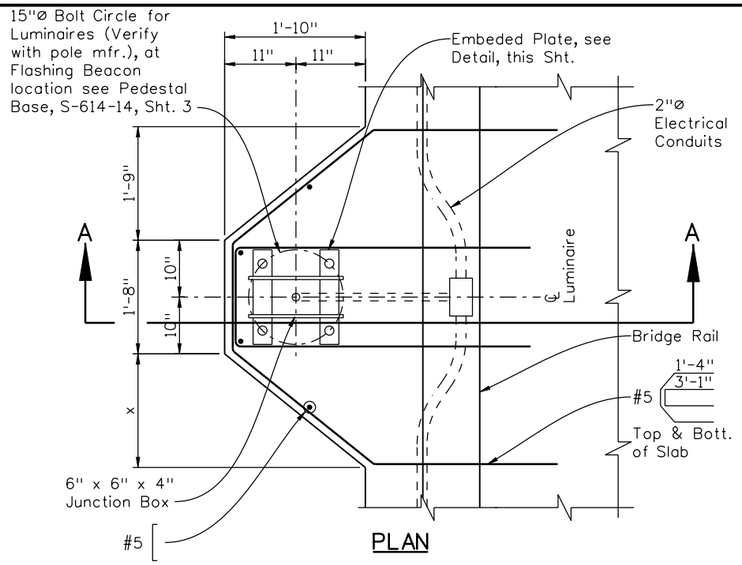

PLAN

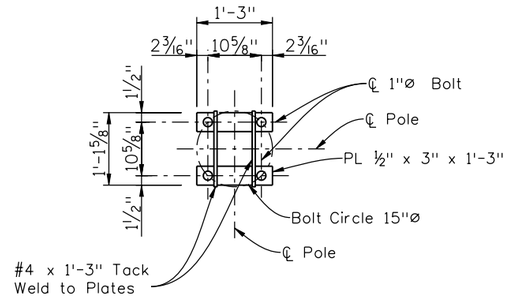

EMBEDDED PLATE DETAIL

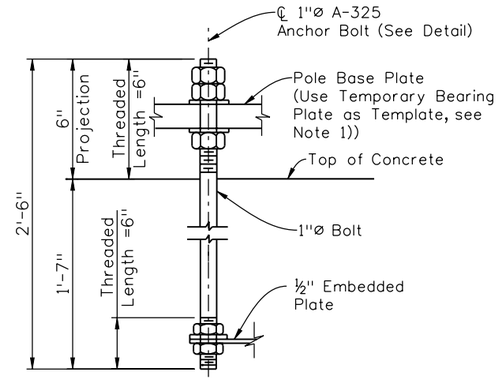

ANCHOR BOLT DETAIL

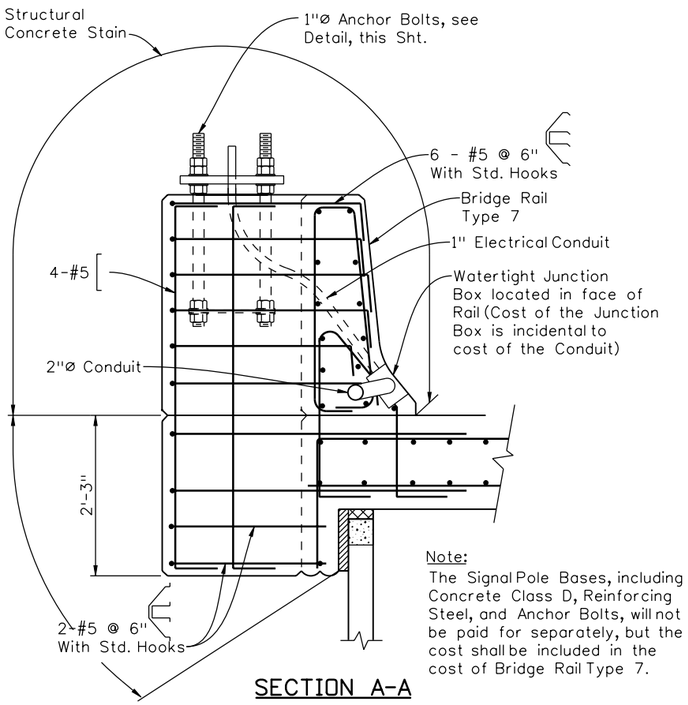

Note:
The Signal Pole Bases, including Concrete Class D, Reinforcing Steel, and Anchor Bolts, will not be paid for separately, but the cost shall be included in the cost of Bridge Rail Type 7.

SECTION A-A

SIGNAL POLE BASE DETAILS

Retaining Wall xxxx only

Notes:

1. Contractor shall provide a bolt pattern template for installation of Anchor Bolts.

Print Date: 9/27/2010	Sheet Revisions			Colorado Department of Transportation	As Constructed	I-25/SANTA FE INTERCHANGE	Project No./Code
File Name: 16311WALL_PH2_WallDetails05.dgn	Date:	Comments	Init.	2000 South Holly Street, Denver, CO 80222, Phone: 303-972-9112 FAX: 303-972-9114	No Revisions:	SIGNAL POLE BASE DETAILS	IM 0254-394
Horiz. Scale: 1:1 Vert. Scale: As Noted				Region 6 RLB	Revised:	Designer: P. STEIN / Detailer: R. DILLON / Sheet Subset: WALL / Structure Numbers: X / Subset Sheets: W33 of XX	16311
Unit Information Unit Leader Initials					Void:		Sheet Number 215

Design: Designed By PRS 03/10 INITIAL DATE; Checked By DATE
Detail: Detailed By RAD 03/10 INITIAL DATE; Checked By PRS DATE
Quantities: Quantities By INITIAL DATE; Checked By DATE
Revision Dates (Preliminary Stage Only)

PE Summit 7900 East Union Ave. Suite 330 Denver, CO 80237 www.pesummit.com
Engineering paths to transportation solutions

Ricdi 4:05:11 PM K:\08276\16311\Phase 2\Bridge\Drawings\16311WALL_PH2_WallDetails05.dgn
9/27/2010 CDOT-PDFDraftQuality_XM.pltcfg CDOT-PenTable.tbl

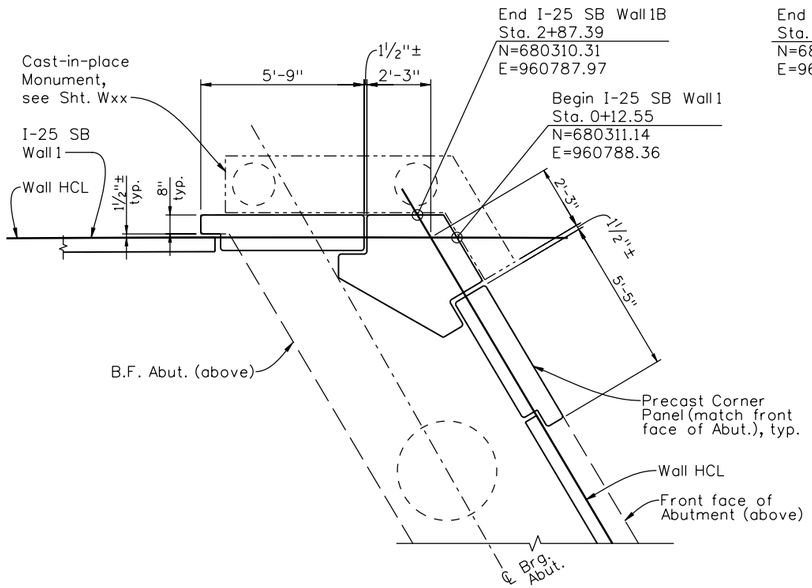

PLAN
CORNER AT I-25 SB WALL 1
(Abutment 1, Str. No. F-16-XS)

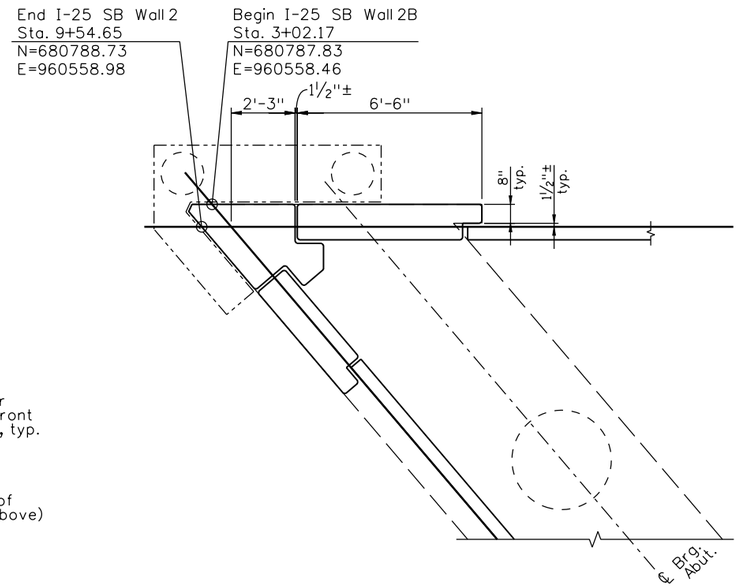

PLAN
CORNER AT I-25 SB WALL 2
(Abutment 4, Str. No. F-16-XS)

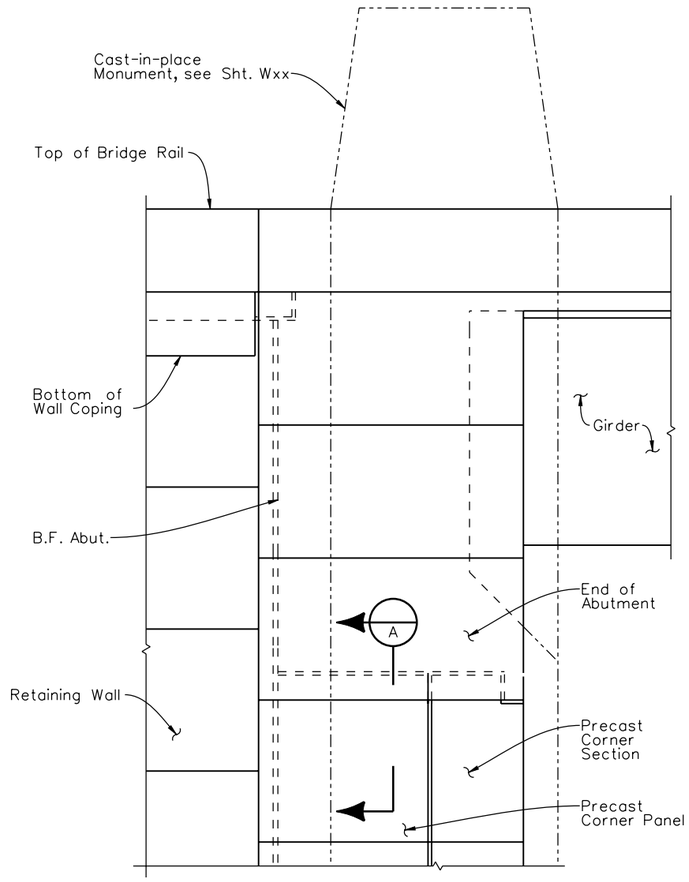

TYPICAL CORNER PANEL ELEVATION

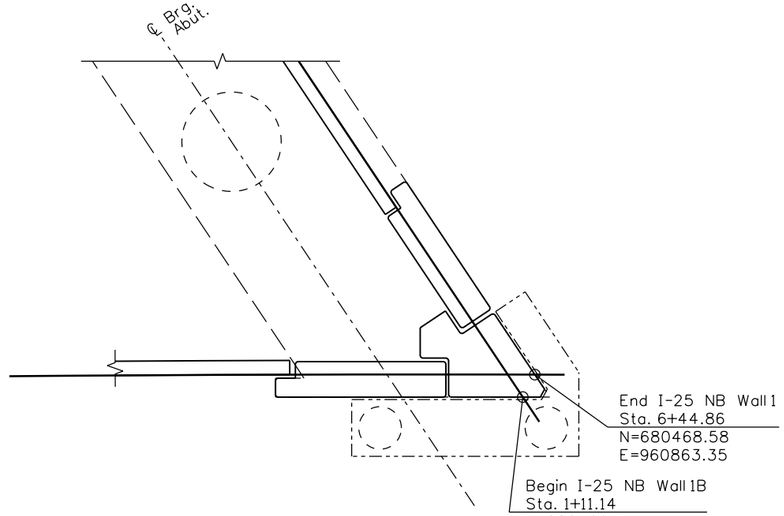

PLAN
CORNER AT I-25 NB WALL 1
(Abutment 1, Str. No. F-16-XS)

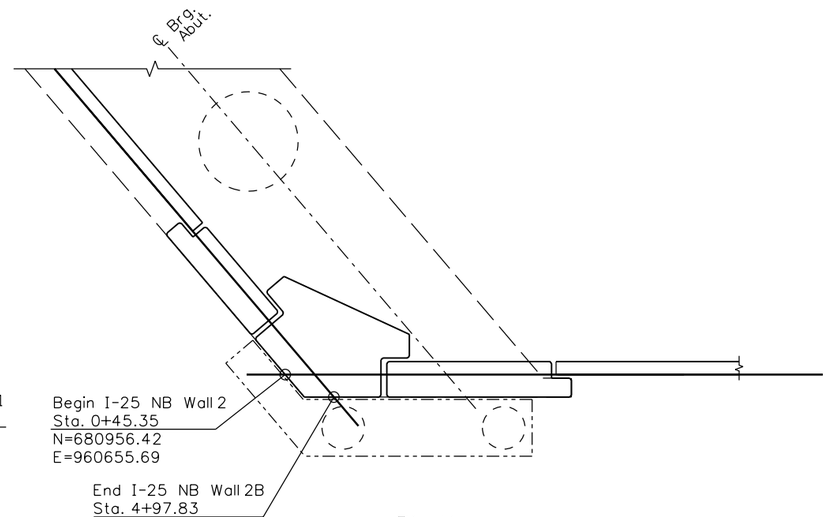

PLAN
CORNER AT I-25 NB WALL 2
(Abutment 4, Str. No. F-16-XS)

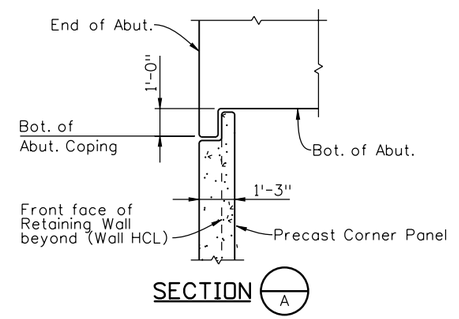

SECTION A

Revision Dates (Preliminary Stage Only)

Design				Detail				Quantities			
	INITIAL	DATE		INITIAL	DATE		DATE
Designed By	PRS	03/10	Detailed By	RAD	03/10	Quantities By	
Checked By			Checked By	PRS		Checked By	

Print Date: 9/27/2010	
File Name: 16311WALL_PH2_AbutCorners01.dgn	
Horiz. Scale: 1:1	Vert. Scale: As Noted
Unit Information	Unit Leader Initials

FELSBURG HOLT & ULLEVIG 6300 South Syracuse Way Centennial, CO 80111 25 years of engineering paths to transportation solutions

Sheet Revisions

Date:	Comments	Init.

Colorado Department of Transportation
DOT DEPARTMENT OF TRANSPORTATION
2000 South Holly Street
Denver, CO 80222
Phone: 303-972-9112 FAX: 303-972-9114
Region 6 RLB

As Constructed

No Revisions:
Revised:
Void:

I-25/SANTA FE INTERCHANGE
SANTA FE BRIDGE
ABUTMENT CORNER DETAILS

Designer:	P. STEIN	Structure Numbers	WALL-F-16-DW
Detailer:	R. DILLON		WALL-F-16-DX
Sheet Subset:	WALL	Subset Sheets:	W34 of X

Project No./Code
IM 0254-394
16311
Sheet Number 216

Ricdi 4:05:16 PM K:\08276\16311\Phase 2\Bridge\Drawings\16311WALL_PH2_AbutCorners01.dgn
9/27/2010 CDOT-PDFDraftQuality_XM.pltcfg CDOT-PenTable.tbl

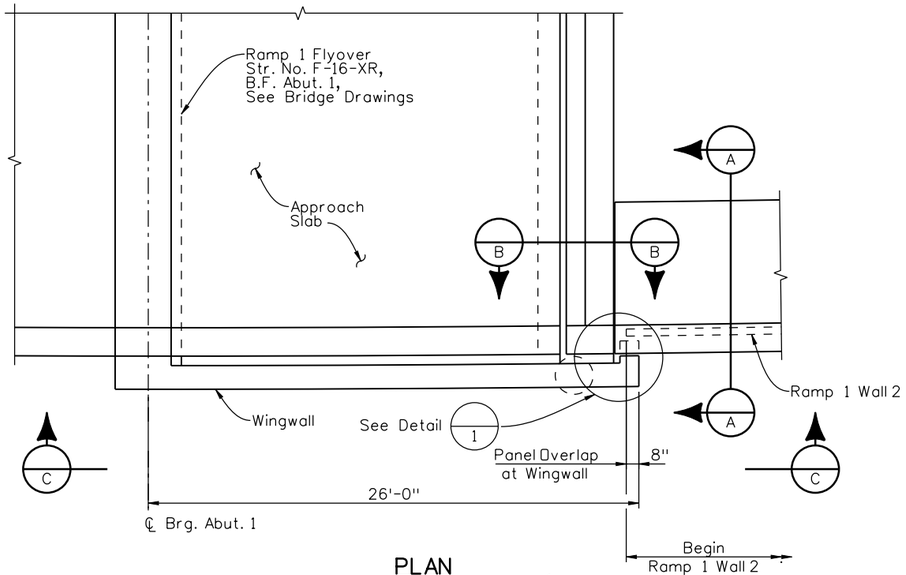

PLAN
RAMP 1 ABUTMENT 1/
RAMP 1 WALL 2 INTERFACE

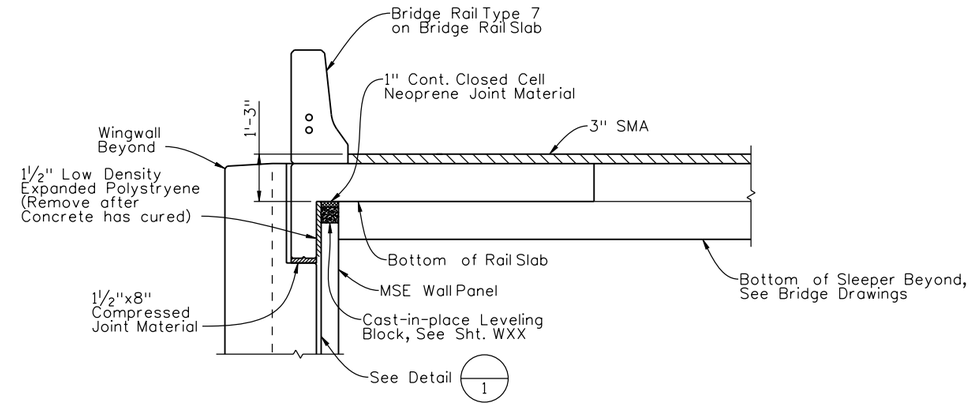

SECTION A

Notes:

1. Compressed Joint Material, Expanded Polystyrene, Geotextile, and Fasteners shall not be paid for separately, but shall be included in Item 504, Precast Panel Facing.
2. See Compressed Joint Material Note, Sht. WXX.

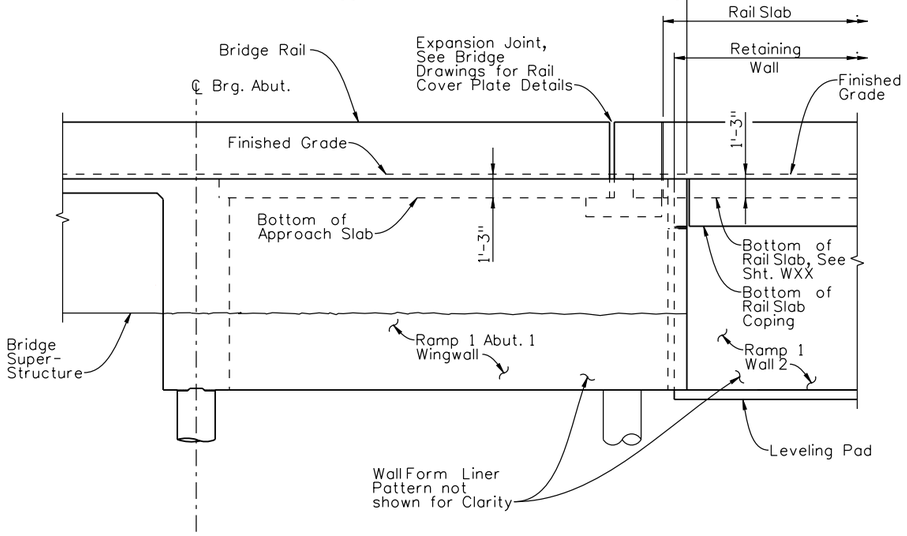

ELEVATION
RAMP 1 ABUTMENT 1/
RAMP 1 WALL 2 INTERFACE C

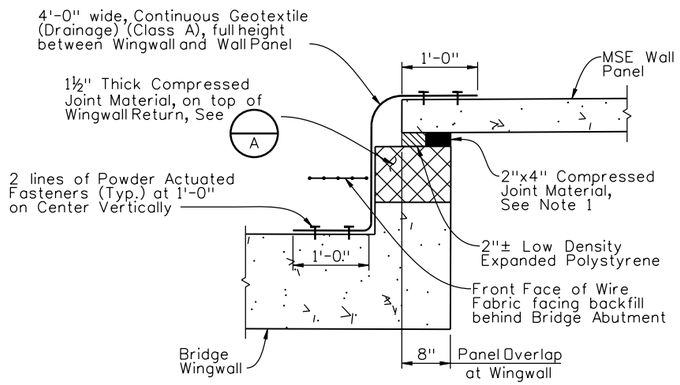

DETAIL 1
(Typical Joint Treatment)

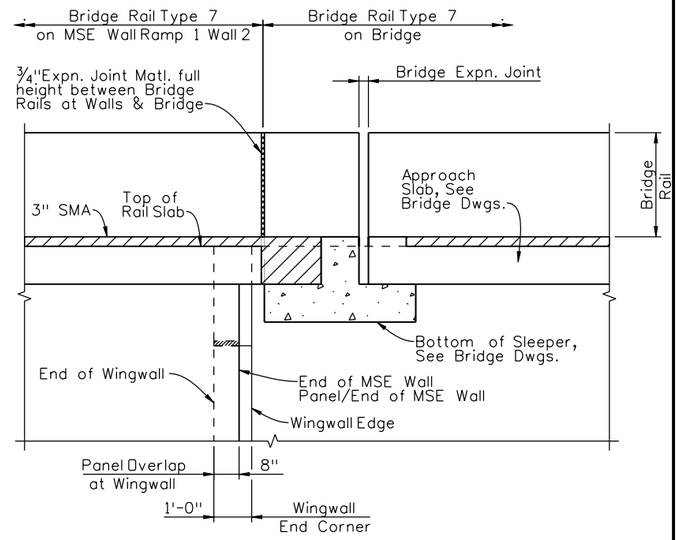

SECTION B

Design			Detail			Quantities		
	INITIAL	DATE		INITIAL	DATE		INITIAL	DATE
Designed By	PRS	03/10	Detailed By	RAD	03/10	Quantities By		
Checked By			Checked By	PRS		Checked By		

Revision Dates (Preliminary Stage Only)

Ricdil 4:05:21 PM K:\08276\16311\Phase 2\Bridge\Drawings\16311WALL_PH2_AbutCorners02.dgn
9/27/2010 CDOT-PDFDraftQuality_XM.pltcfg CDOT-PenTable.tbl

Print Date: 9/27/2010			
File Name: 16311WALL_PH2_AbutCorners02.dgn			
Horiz. Scale: 1:1	Vert. Scale: As Noted		
Unit Information	Unit Leader Initials		

FELSBURG HOLT & ULLEVIG
6300 South Syracuse Way
Centennial, CO 80111
25 years of engineering paths to transportation solutions

Sheet Revisions		
Date:	Comments	Init.

Colorado Department of Transportation
DOT DEPARTMENT OF TRANSPORTATION
2000 South Holly Street
Denver, CO 80222
Phone: 303-972-9112 FAX: 303-972-9114
Region 6 RLB

As Constructed
No Revisions:
Revised:
Void:

I-25/SANTA FE INTERCHANGE
RAMP 1 FLYOVER
ABUTMENT 1 INTERFACE DETAILS

Designer:	P. STEIN	Structure Numbers	WALL-F-16-DU
Detailer:	M. EBERLY		
Sheet Subset:	WALL	Subset Sheets:	W35 of X

Project No./Code
IM 0254-394
16311
Sheet Number 217

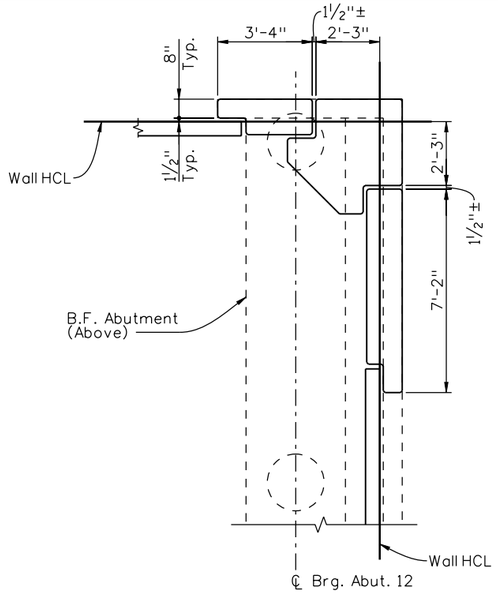

PLAN
CORNER AT RAMP 1 WALL 4
(Abutment 12, Str. No. F-16-XR)

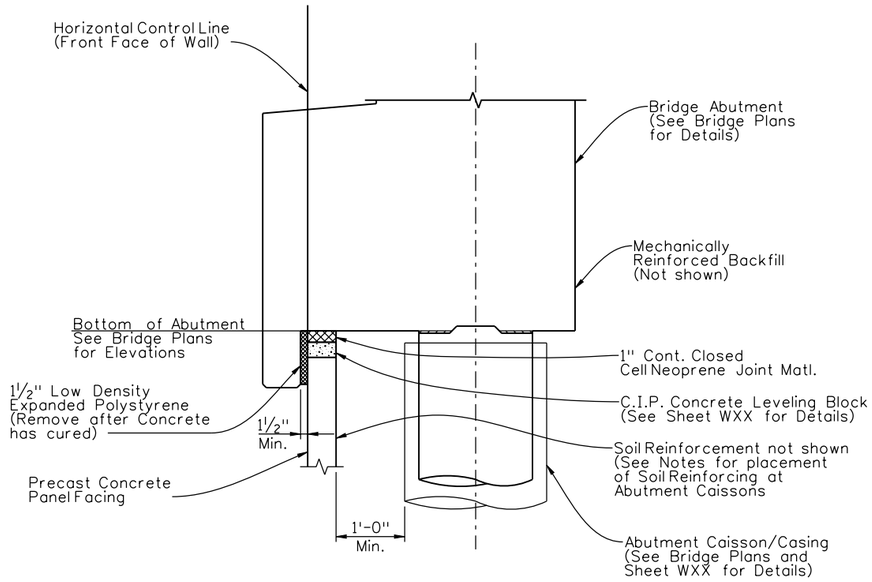

SECTION AT BRIDGE ABUTMENT 12

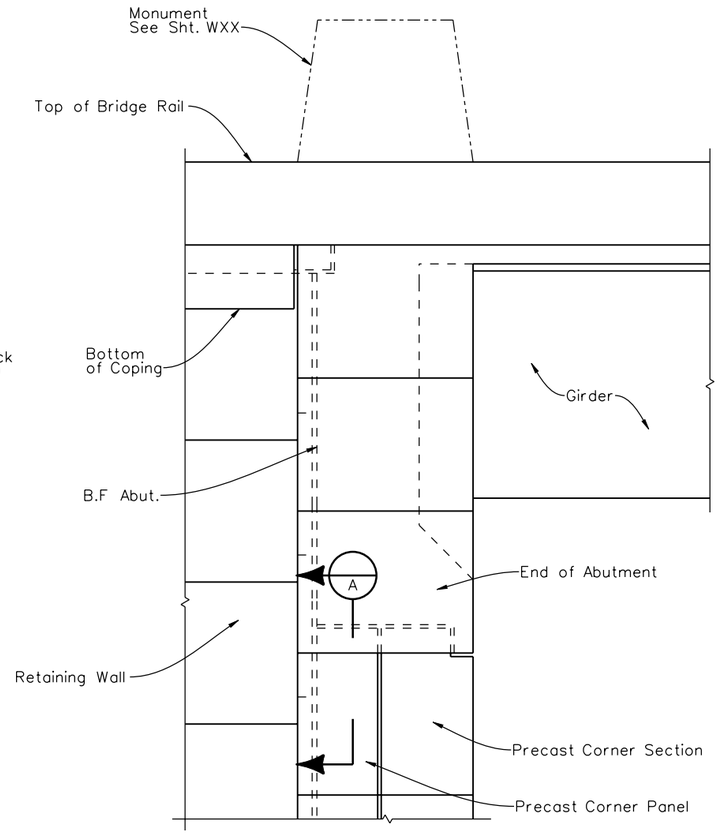

TYPICAL CORNER PANEL ELEVATION

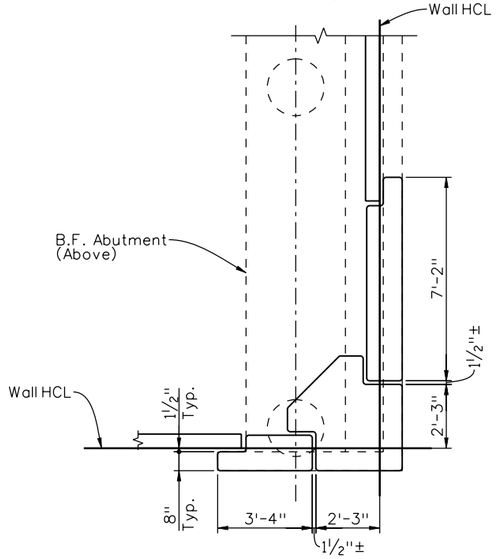

PLAN
CORNER AT RAMP 1 WALL 3
(Abutment 12, Str. No. F-16-XR)

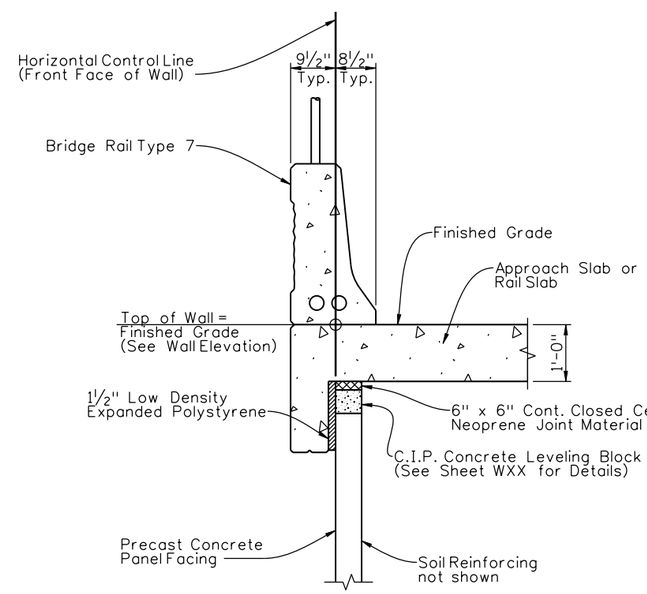

SECTION AT APPROACH SLAB OR RAIL SLAB

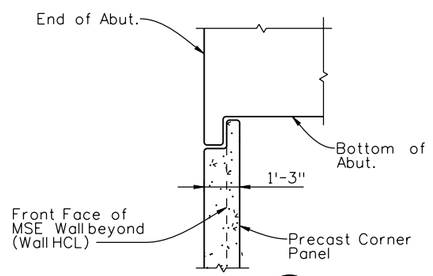

SECTION A

Revision Dates (Preliminary Stage Only)

Design				Detail				Quantities			
Designed By	PRS	INITIAL	DATE	Detailed By	RAD	INITIAL	DATE	Quantities By	PRS	INITIAL	DATE
Checked By		05/10		Checked By	PRS	05/10		Checked By			

Print Date: 9/27/2010
File Name: 16311WALL_PH2_AbutCorners03.dgn
Horiz. Scale: 1:1 Vert. Scale: As Noted
Unit Information Unit Leader Initials

FELSBURG HOLT & ULLEVIG 6300 South Syracuse Way Centennial, CO 80111 25 years of engineering paths to transportation solutions

Sheet Revisions		
Date:	Comments	Init.

Colorado Department of Transportation
2000 South Holly Street
Denver, CO 80222
Phone: 303-972-9112 FAX: 303-972-9114
Region 6 RLB

As Constructed
No Revisions:
Revised:
Void:

I-25/SANTA FE INTERCHANGE
RAMP 1 FLYOVER
ABUTMENT 12 CORNER DETAILS

Designer: P. STEIN
Detailer: R. DILLON
Sheet Subset: WALL
Structure Numbers: WALL-F-16-DV
Subset Sheets: W36 of X

Project No./Code
IM 0254-394
16311
Sheet Number 218

PW K:\08276\16311\Phase 2\Bridge\Drawings\16311WALL_PH2_AbutCorners03.dgn
CDOT-PDFDraftQuality_XM.pltcfg CDOT-PenTable.tbl
Ricdi 4:05:28 9/27/2010

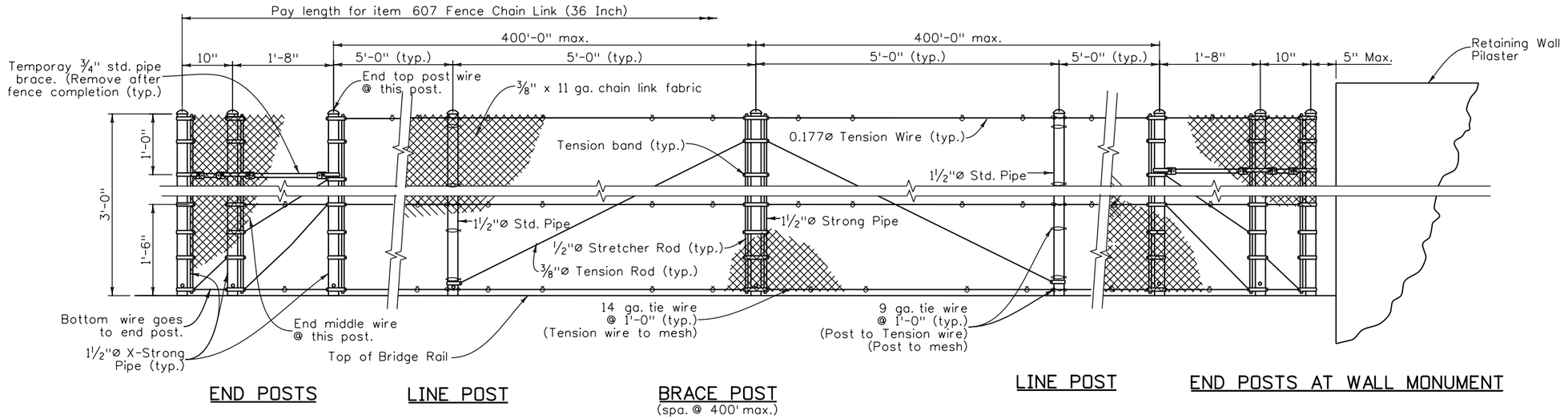

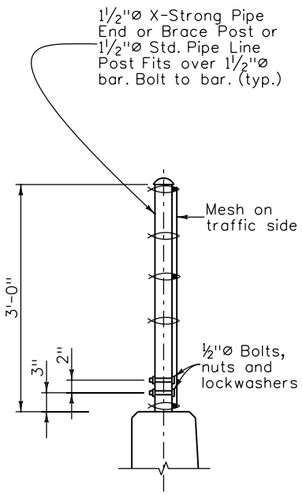

TYPICAL SECTION

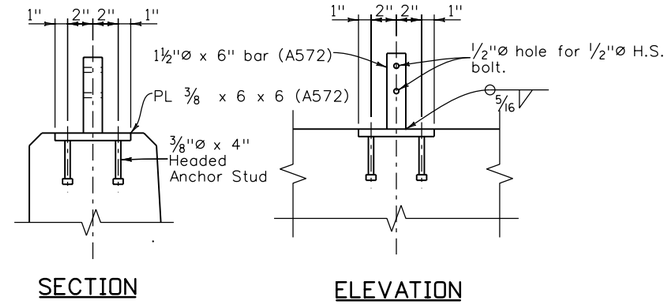

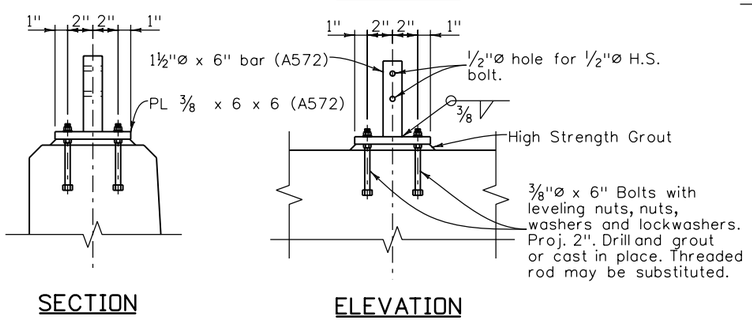

ALTERNATE ANCHORAGE DETAILS

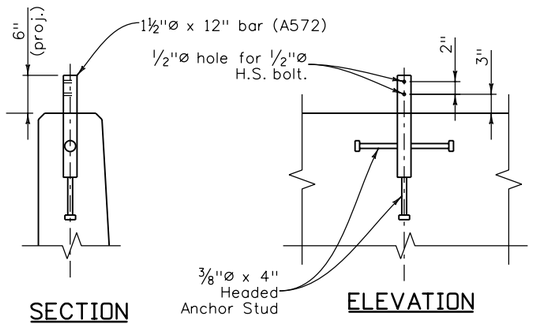

ANCHORAGE DETAIL

NOTES

Anchorage assembly shall be galvanized after fabrication. The fence assembly shallbe Galvanized and Vinyl Coated after fabrication. Anchorages shall only be galvanized after fabrication.

Tension Rods and Wires shall have turnbuckles.

Post shall be vertical.

Pipe shall conform to ASTM A53 Type E or S, Grade B.

DESIGN DATA

Total Tension = 5400 lbs
Test with: Max Midbay deflection = 1¼" for Lateral Load of 160 lbs. on 1 ft². 1'-6" up @ center of bay.

Live Load: wind load = 11 psf
or snow impact load = 96 plf @ 1'-6" up

Structural Steel: Pipe f_y = 35,000 psi
ASTM A572 (GR 50) f_y = 50,000 psi

Standard Color Vinyl Coatings over Galvanized Wire		Munsell Color System No. (as per ASTM)
	Galvanized Only	None
	Brown	7YR 2.4/1.75
	Green	8.8G 2.63/5.8
X	Black	1.8PB 1.26/0.5

Revision Dates (Preliminary Stage Only)

Design			Detail			Quantities		
	INITIAL	DATE		INITIAL	DATE		INITIAL	DATE
Designed By	PRS	03/10	Detailed By	RAD	03/10	Quantities By		
Checked By			Checked By			Checked By		

Ricdil 4:05:33 PM K:\08276\16311\Phase 2\Bridge\Drawings\16311WALL_PH2_ChainLinkFence.dgn
9/27/2010 CDOT-PDFDraftQuality_XM.pltcfg CDOT-PenTable.tbl

Print Date: 9/27/2010
File Name: 16311WALL_PH2_ChainLinkFence.dgn
Horiz. Scale: 1:1 Vert. Scale: As Noted
Unit Information Unit Leader Initials

FELSBURG HOLT & ULLEVIG 6300 South Syracuse Way Centennial, CO 80111 25 years of engineering paths to transportation solutions

Sheet Revisions		
Date:	Comments	Init.

Colorado Department of Transportation
DEPARTMENT OF TRANSPORTATION
2000 South Holly Street
Denver, CO 80222
Phone: 303-972-9112 FAX: 303-972-9114
Region 6 RLB

As Constructed
No Revisions:
Revised:
Void:

I-25/SANTA FE INTERCHANGE
CHAIN LINK FENCE (SPECIAL)
(36 INCH SPLASH GUARD)

Designer: P. STEIN
Detailer: R. DILLON
Sheet Subset: WALL
Structure Numbers: MULTIPLE
Subset Sheets: W37 of X

Project No./Code
IM 0254-394
16311
Sheet Number 219

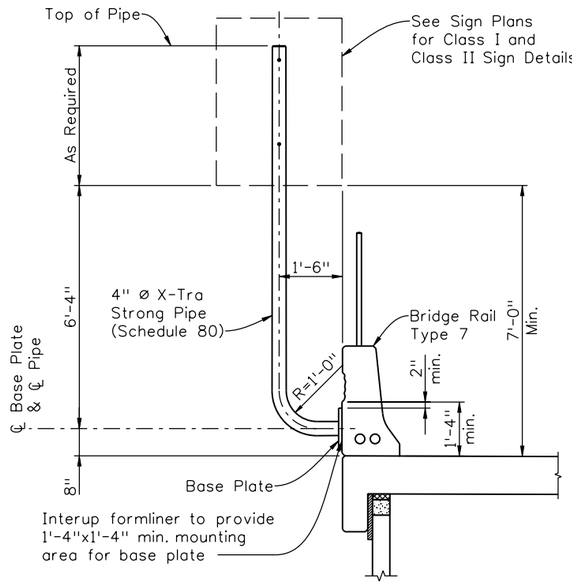

ELEVATION AT BRIDGE RAIL TYPE 7

(Located on Wall xxxxx, Sta. xxxx, see Sht. Wxx)

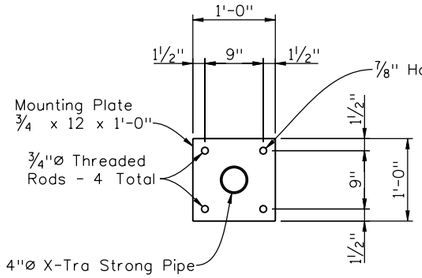

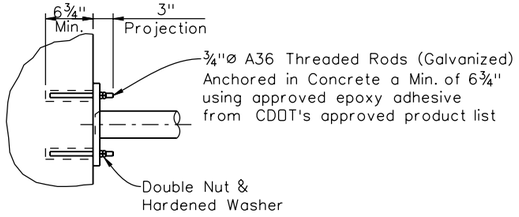

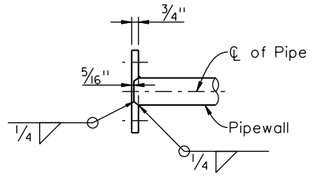

MOUNTING PLATE AND ANCHORAGE DETAILS

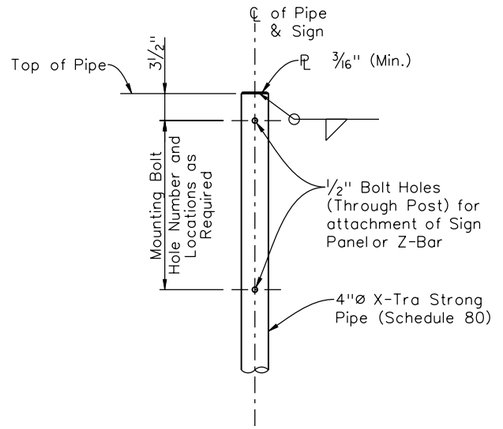

TOP OF POST DETAIL

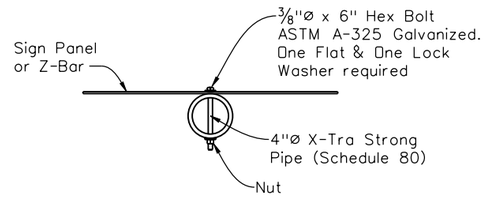

TYPICAL SECTION AT BOLTED CONNECITONS

DESIGN DATA

Wind Speed:	80 MPH
Design Wind Pressure:	37 psf
Max Sign Area:	6.25 ft²

Notes:

Structural Steel Pipe shall be ASTM A53, Grade B.

Mounting Plate Anchor Bolts shall be ¾"ø Threaded Rods (ASTM A-36, Galvanized).

All other Structural Steel shall be AASHTO M-183 (ASTM A-36).

The Sign Bracket Assembly (Mounting Plate and Pipe), and the Anchor Bolt Assembly, shall be Galvanized after fabrication.

The Sign Bracket vertical pipe which supports the Sign Panel shall be erected plumb.

For both Class I and Class II Sign Panle Mounting Bolt locations on posts, see M&S Standards, July 2006, Standard Plan Numbers S-614-2, S-614-3, S-614-8, S-614-20, and S-614-22.

All Bolts, Nuts, and Washers required for sign mounting shall be galvanized.

Revision Dates (Preliminary Stage Only)

Design	INITIAL	DATE
Designed By	WJM	09/10
Checked By		

Detail	INITIAL	DATE
Detailed By	RAD	09/10
Checked By	WJM	09/10

Quantities	INITIAL	DATE
Quantities By	WJM	
Checked By	PRS	

Print Date: 9/27/2010
File Name: 16311WALL_PH2_RailMountedSigns.dgn
Horiz. Scale: 1:1 Vert. Scale: As Noted
Unit Information Unit Leader Initials

FELSBURG HOLT & ULLEVIG 6300 South Syracuse Way Centennial, CO 80111 25 years of engineering paths to transportation solutions

Sheet Revisions		
Date:	Comments	Init.

Colorado Department of Transportation
DEPARTMENT OF TRANSPORTATION
2000 South Holly Street
Denver, CO 80222
Phone: 303-972-9112 FAX: 303-972-9114
Region 6 RLB

As Constructed
No Revisions:
Revised:
Void:

I-25/SANTA FE INTERCHANGE
RAIL MOUNTED SIGN DETAILS

Designer:	KMA	Structure Numbers	X
Detailer:	KPS		X
Sheet Subset:	WALL	Subset Sheets:	W38 of XX

Project No./Code
IM 0254-394
16311
Sheet Number 220

Ricdi 4:05:38 PM K:\08276\16311\Phase 2\Bridge\Drawings\16311WALL_PH2_RailMountedSigns.dgn
9/27/2010 CDOT-PDFDraftQuality_XM.pltcfg CDOT-PenTable.tbl

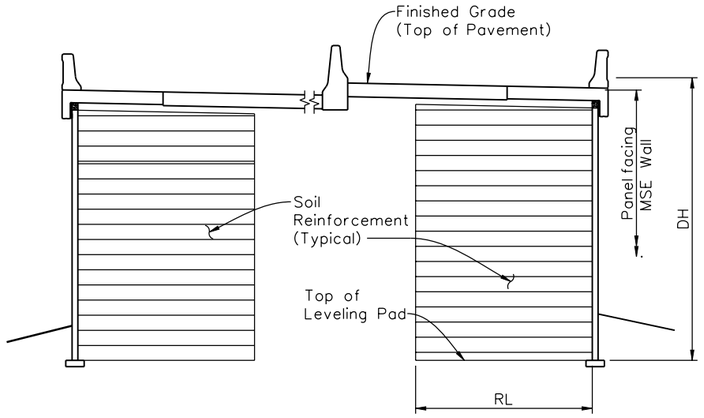

WALLS ON BOTH SIDES OF I-25 OR RAMP

(I-25 Walls Shown)

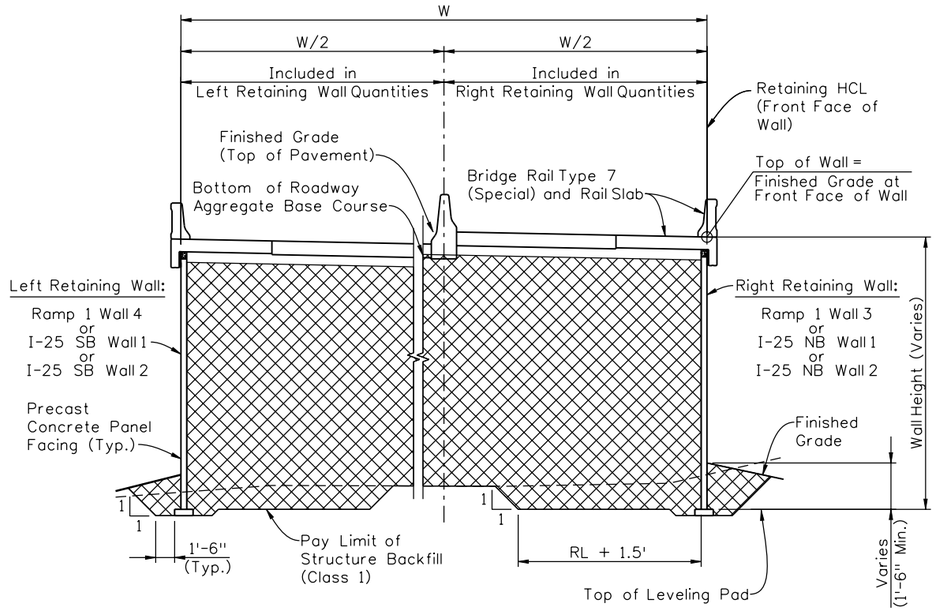

WALLS ON BOTH SIDES OF I-25 OR RAMP

(I-25 Walls Shown)

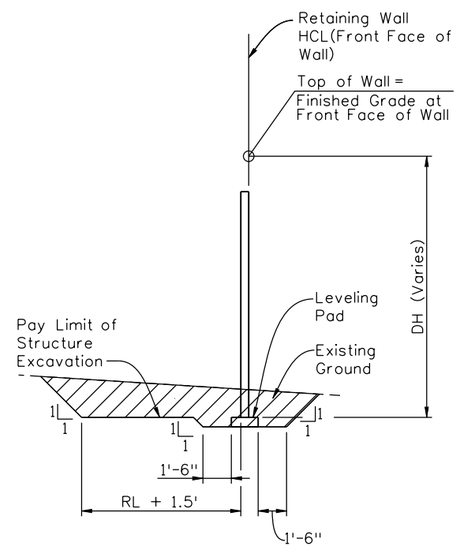

TYPICAL STRUCTURE EXCAVATION

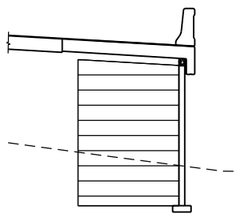

WALL ON ONE SIDE OF I-25 OR RAMP

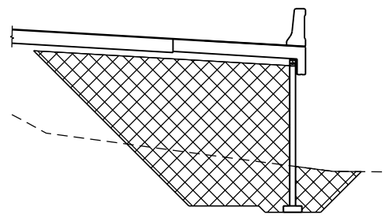

WALL ON ONE SIDE OF I-25 OR RAMP

MECHANICAL REINFORCEMENT OF SOIL

STRUCTURE BACKFILL

ABBREVIATIONS

DH = Design Height (ft.)
RL = Reinforcing Length (ft.)

LEGEND

- Pay Limit for Structure (Class 1) Backfill
- Pay Limits for Mechanically Stabilized Earth
- Pay Limit for Structure Excavation

Revision Dates (Preliminary Stage Only)

Design			Detail			Quantities		
	INITIAL	DATE		INITIAL	DATE		INITIAL	DATE
Designed By	PRS	03/10	Detailed By	RAD	03/10	Quantities By		
Checked By			Checked By	PRS		Checked By		

Print Date: 9/27/2010
File Name: 16311WALL_PH2_Excav01.dgn
Horiz. Scale: 1:1 Vert. Scale: As Noted
Unit Information Unit Leader Initials

FELSBURG HOLT & ULLEVIG 6300 South Syracuse Way Centennial, CO 80111 25 years of engineering paths to transportation solutions

Sheet Revisions		
Date:	Comments	Init.

Colorado Department of Transportation
DEPARTMENT OF TRANSPORTATION
2000 South Holly Street
Denver, CO 80222
Phone: 303-972-9112 FAX: 303-972-9114
Region 6 RLB

As Constructed
No Revisions:
Revised:
Void:

I-25/SANTA FE INTERCHANGE
EXCAVATION &
BACKFILL DETAILS

Designer: P. STEIN
Detailer: R. DILLON
Sheet Subset: WALL
Structure Numbers: MULTIPLE
Subset Sheets: W39 of XX

Project No./Code
IM 0254-394
16311
Sheet Number 221

Ricdil 4:05:44 PM K:\08276\16311\Phase 2\Bridge\Drawings\16311WALL_PH2_Excav01.dgn
9/27/2010 CDOT-PDFDraftQuality_XM.pltcfg CDOT-PenTable.tbl

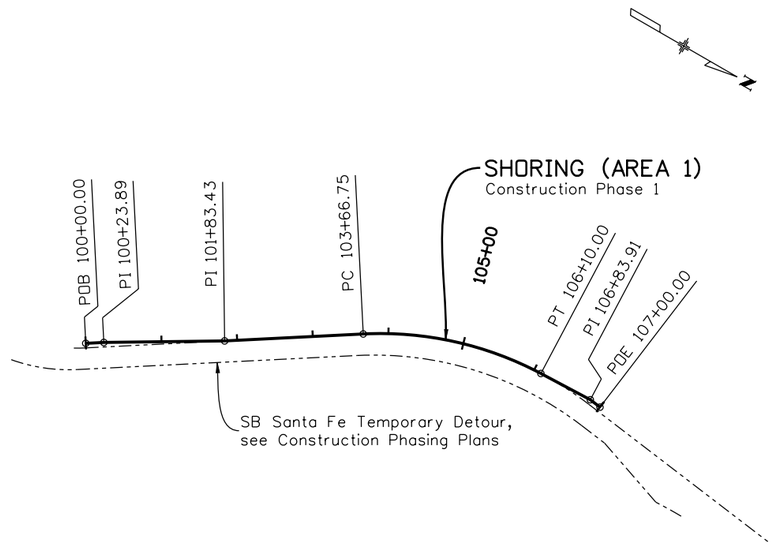

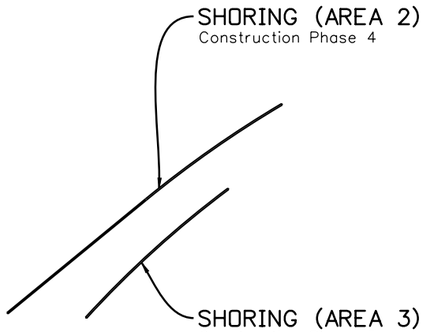

Coordinate Geometry Table

Revision Dates (Preliminary Stage Only)

Design			Detail			Quantities		
	INITIAL	DATE		INITIAL	DATE		INITIAL	DATE
Designed By	PRS	09/10	Detailed By	RAD	09/10	Quantities By		
Checked By			Checked By			Checked By		

R:\cdi 4:05:50 PW K:\08276\16311\Phase 2\Bridge\Drawings\16311WALL_PH2_WallGeom03.dgn
9/27/2010 CDOT-PDFDraftQuality_XM.pltcfg CDOT-PenTable.tbl

Print Date: 9/27/2010
File Name: 16311WALL_PH2_WallGeom03.dgn
Horiz. Scale: 1:200 Vert. Scale: As Noted
Unit Information Unit Leader Initials

FELSBURG HOLT & ULLEVIG 6300 South Syracuse Way Centennial, CO 80111 25 years of engineering paths to transportation solutions

Sheet Revisions

Date:	Comments	Init.

Colorado Department of Transportation
DEPARTMENT OF TRANSPORTATION
2000 South Holly Street
Denver, CO 80222
Phone: 303-972-9112 FAX: 303-972-9114
Region 6 RLB

As Constructed
No Revisions:
Revised:
Void:

I-25/SANTA FE INTERCHANGE
SHORING HCL GEOMETRIC PLAN & HORIZONTAL CONTROL LINE DATA

Designer: P. STEIN
Detailer: R. DILLON
Sheet Subset: WALL
Structure Numbers: MULTIPLE
Subset Sheets: W40 of XX

Project No./Code
IM 0254-394
16311
Sheet Number 222

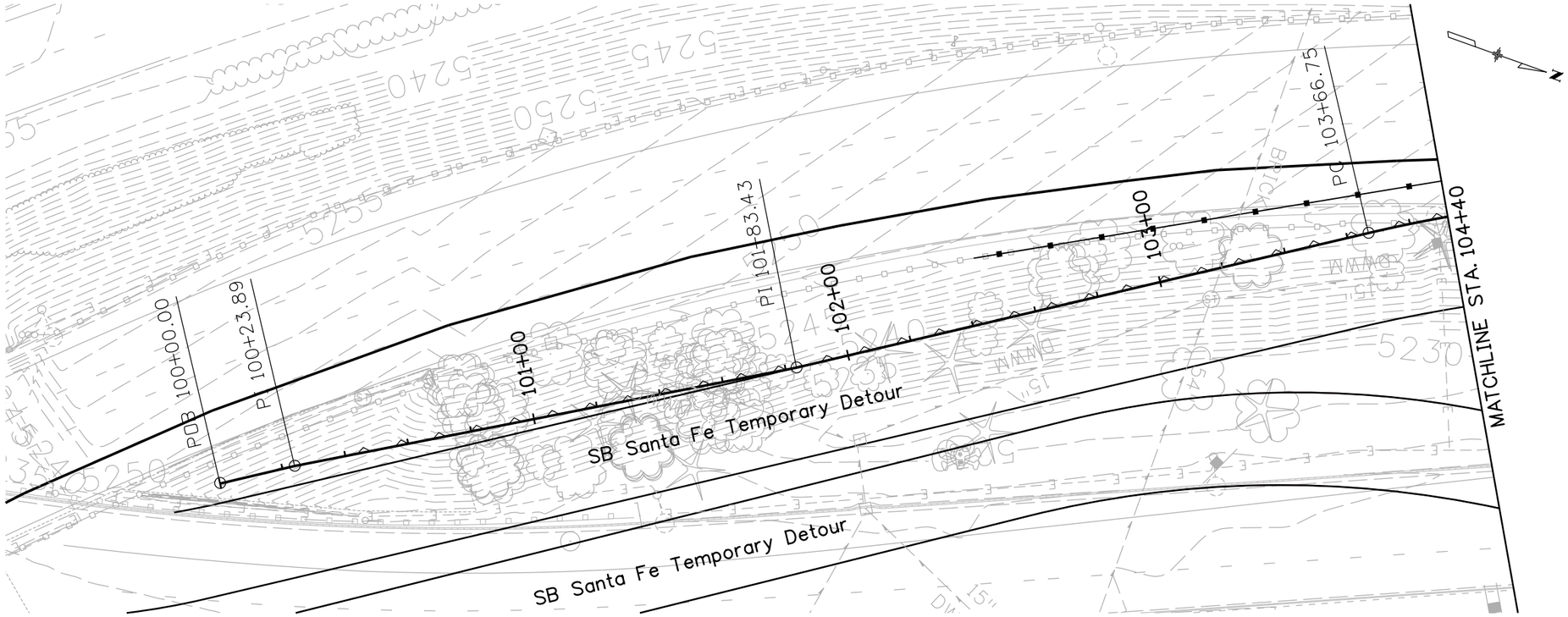

PLAN

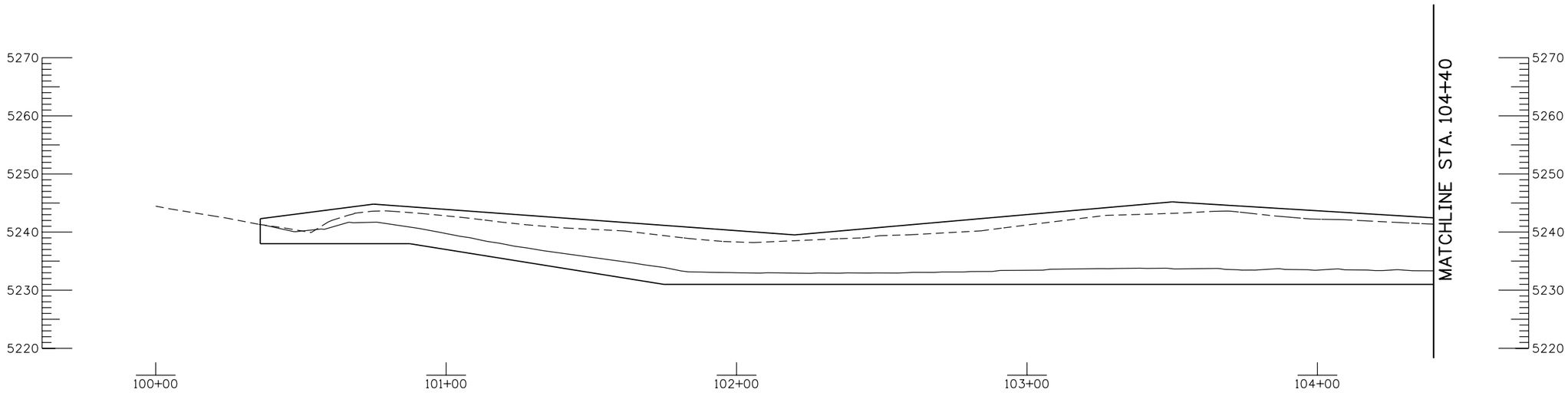

ELEVATION

Revision Dates (Preliminary Stage Only)

Quantities	INITIAL	DATE
Quantities By		
Checked By		

Detail	INITIAL	DATE
Detailed By	RAD	03/10
Checked By		

Design	INITIAL	DATE
Designed By	PRS	03/10
Checked By		

Print Date: 9/27/2010
File Name: 16311WALL_PH2_ShoringArea1-GPE.dgn
Horiz. Scale: 1:40 Vert. Scale: As Noted
Unit Information Unit Leader Initials

FELSBURG HOLT & ULLEVIG 6300 South Syracuse Way Centennial, CO 80111 25 years of engineering paths to transportation solutions

Sheet Revisions

Date:	Comments	Init.

Colorado Department of Transportation
DEPARTMENT OF TRANSPORTATION
2000 South Holly Street
Denver, CO 80222
Phone: 303-972-9112 FAX: 303-972-9114
Region 6 RLB

As Constructed
No Revisions:
Revised:
Void:

I-25/SANTA FE INTERCHANGE
SHORING (AREA 1)
GENERAL LAYOUT (1 OF 2)

Designer: P. STEIN
Detailer: R. DILLON
Sheet Subset: WALL
Structure Numbers
Subset Sheets: W41 of XX

Project No./Code
IM 0254-394
16311
Sheet Number 223

Ricdi 4:05:58 PM K:\08276\16311\Phase 2\Bridge\Drawings\16311WALL_PH2_ShoringArea1-GPE.dgn
9/27/2010 CDOT-PDFDraftQuality_XM.pltcfg CDOT-PenTable.tbl

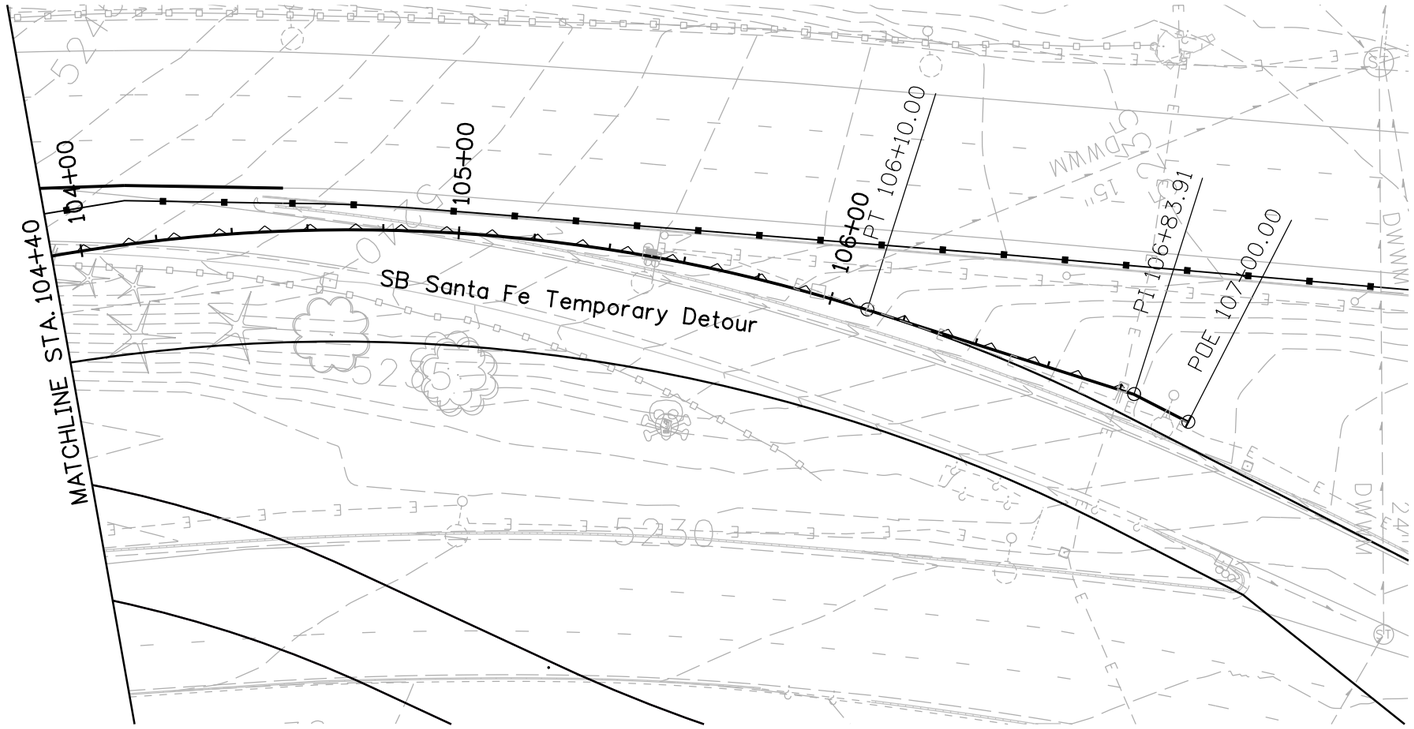

PLAN

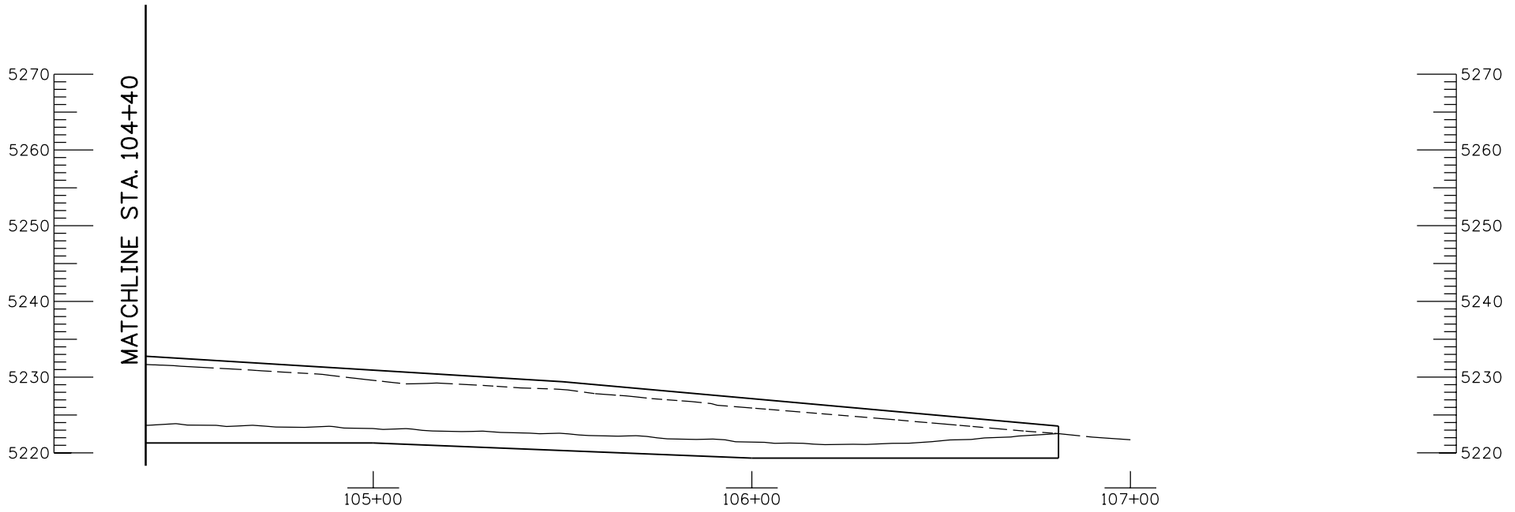

ELEVATION

Revision Dates (Preliminary Stage Only)

Design				Detail				Quantities			
	INITIAL	DATE			INITIAL	DATE			INITIAL	DATE
Designed By	PRS	03/10	Detailed By		RAD	03/10	Quantities By			
Checked By			Checked By				Checked By			

Print Date: 9/27/2010
File Name: 16311WALL_PH2_ShoringArea1-GPE.dgn
Horiz. Scale: 1:40 Vert. Scale: As Noted
Unit Information Unit Leader Initials

FELSBURG HOLT & ULLEVIG 6300 South Syracuse Way Centennial, CO 80111 25 years of engineering paths to transportation solutions

0000

Sheet Revisions		
Date:	Comments	Init.

Colorado Department of Transportation
DOT DEPARTMENT OF TRANSPORTATION
2000 South Holly Street
Denver, CO 80222
Phone: 303-972-9112 FAX: 303-972-9114
Region 6 RLB

As Constructed
No Revisions:
Revised:
Void:

I-25/SANTA FE INTERCHANGE
SHORING (AREA 1)
GENERAL LAYOUT (2 OF 2)

Designer: P. STEIN
Detailer: R. DILLON
Sheet Subset: WALL
Structure Numbers:
Subset Sheets: W42 of XX

Project No./Code
IM 0254-394
16311
Sheet Number 224

Ricdil 4:06:04 PM K:\08276\16311\Phase 2\Bridge\Drawings\16311WALL_PH2_ShoringArea1-GPE.dgn
9/27/2010 CDOT-PDFDraftQuality_XM.pltcfg CDOT-PenTable.tbl

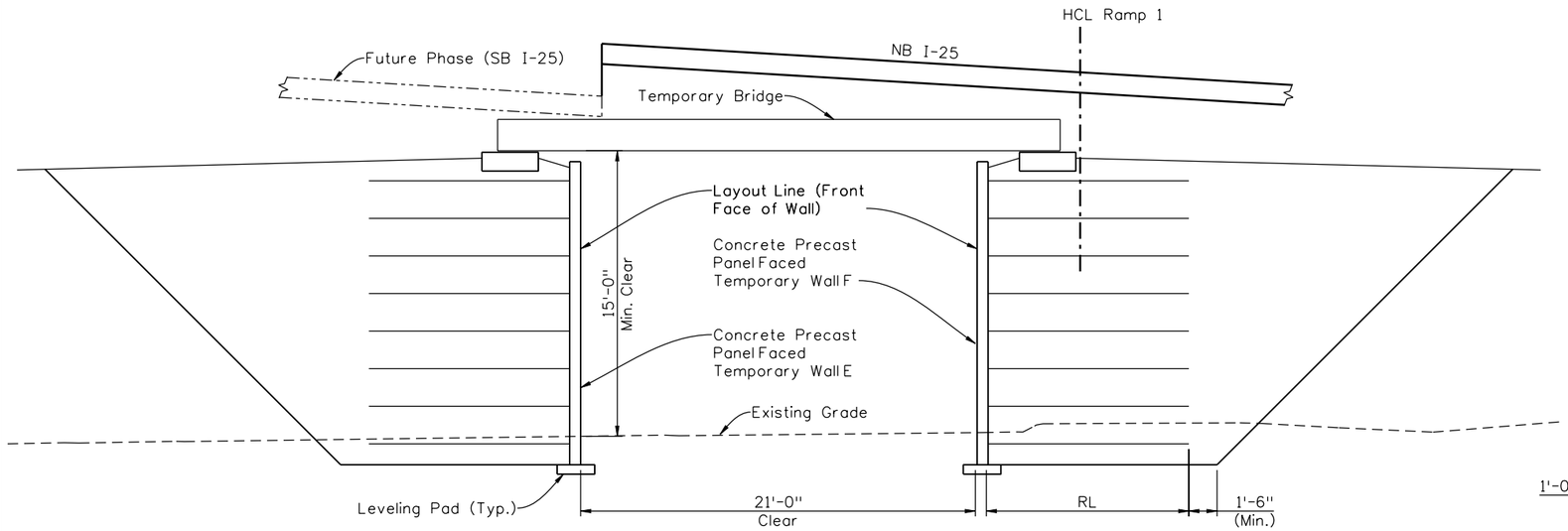

TEMPORARY WALLS E & F TYPICAL SECTION

PHASE 1 CONSTRUCTION

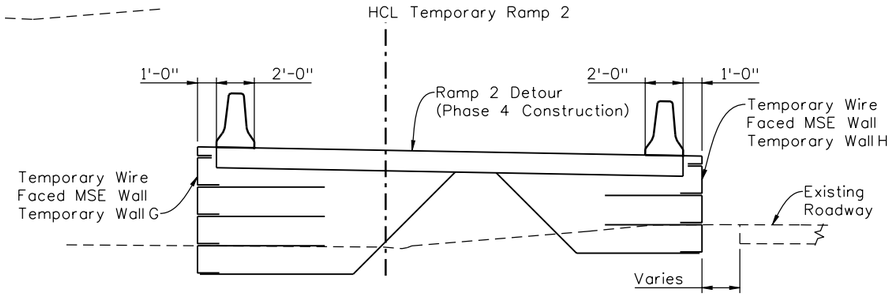

TEMPORARY WALLS G & H TYPICAL SECTION

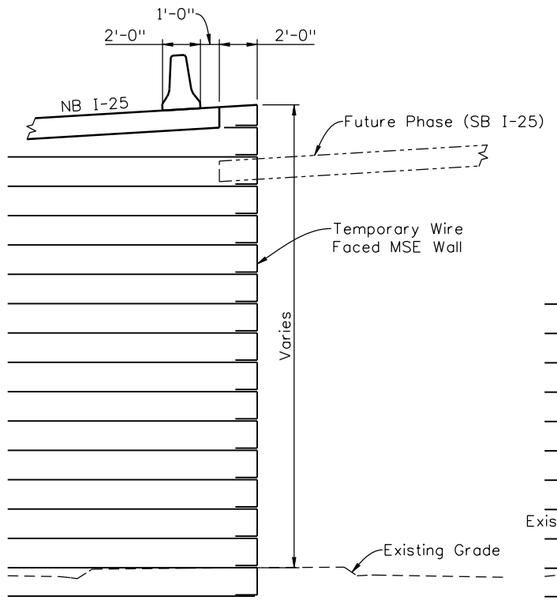

TEMPORARY WALLS A & C TYPICAL SECTION

PHASE 2 CONSTRUCTION

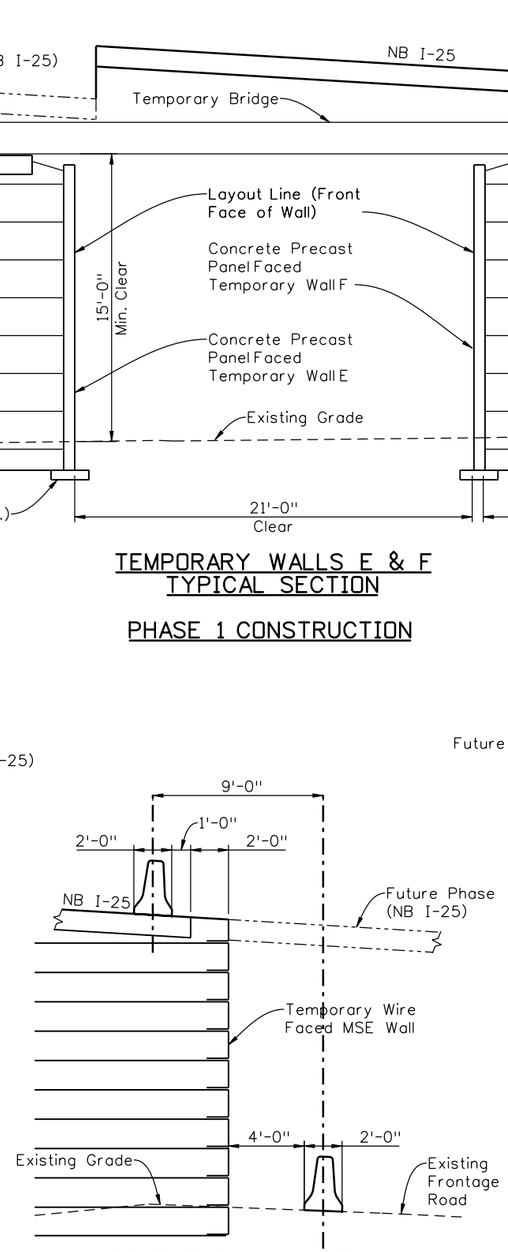

TEMPORARY WALL D TYPICAL SECTION

PHASE 2 CONSTRUCTION

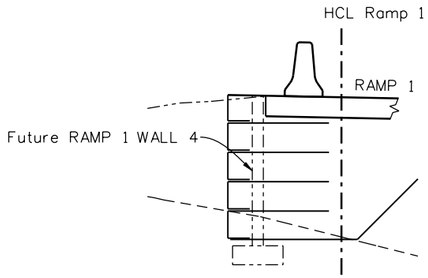

TEMPORARY WALL B STA 303+60.89 TO STA 304+50

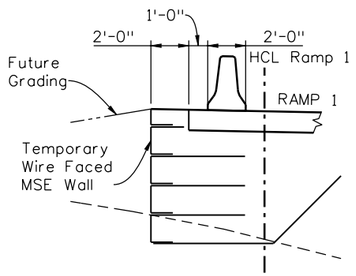

TEMPORARY WALL B TYPICAL SECTION

PHASE 3 CONSTRUCTION

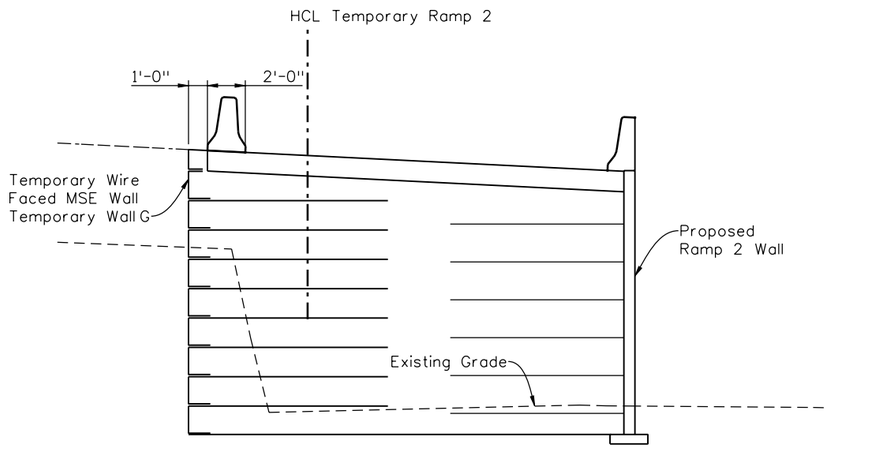

TEMPORARY WALL G & RAMP 2 WALL TYPICAL SECTION

PHASE 4 CONSTRUCTION

Revision Dates (Preliminary Stage Only)

Design				Detail				Quantities			
Designed By		Detailed By				Quantities By					
	INITIAL	DATE		INITIAL	DATE		INITIAL	DATE		INITIAL	DATE
Checked By	PRS	03/10	Checked By	PRS	03/10	Checked By					

Print Date: 9/27/2010
File Name: 16311WALL_PH2_TempWallTypSections01.dgn
Horiz. Scale: 1:1 Vert. Scale: As Noted
Unit Information Unit Leader Initials

FELSBURG HOLT & ULLEVIG 6300 South Syracuse Way Centennial, CO 80111 25 years of engineering paths to transportation solutions

Sheet Revisions		
Date:	Comments	Init.

Colorado Department of Transportation
DEPARTMENT OF TRANSPORTATION
2000 South Holly Street
Denver, CO 80222
Phone: 303-972-9112 FAX: 303-972-9114
Region 6 RLB

As Constructed
No Revisions:
Revised:
Void:

I-25/SANTA FE INTERCHANGE
TEMPORARY WALL TYPICAL SECTIONS

Designer: P. STEIN
Detailer: M. ARROYO
Sheet Subset: WALL
Structure Numbers
Subset Sheets: W43 of X

Project No./Code
IM 0254-394
16311
Sheet Number 225

Ricdil 4:06:10 PM K:\08276\16311\Phase 2\Bridge\Drawings\16311WALL_PH2_TempWallTypSections01.dgn
9/27/2010 CDOT-PDFDraftQuality_XM.pltcfg CDOT-PenTable.tbl

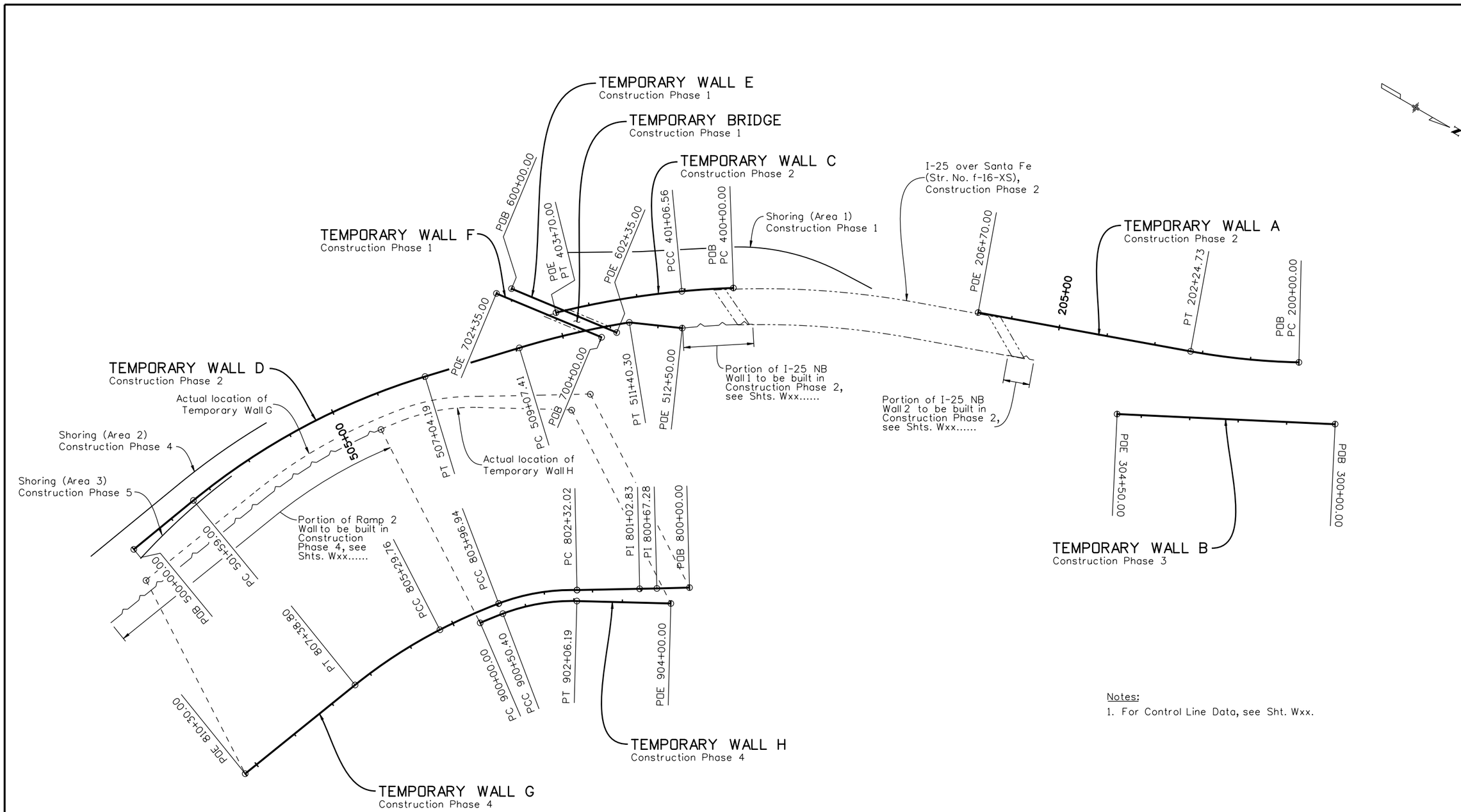

Notes:

1. For Control Line Data, see Sht. Wxx.

Revision Dates (Preliminary Phase Only)

Design	INITIAL	DATE
Designed By	PRS	09/10
Detailed By		
Checked By		

Detail	INITIAL	DATE
Detailed By	RAD	09/10
Checked By		

Quantities	INITIAL	DATE
Quantities By		
Checked By		

Ricdi 4:06:14 PM K:\08276\16311\Phase 2\Bridge\Drawings\16311WALL_PH2_WallGeom04.dgn
9/27/2010 CDOT-PDFDraftQuality_XM.pltcfg CDOT-PenTable.tbl

Print Date: 9/27/2010
File Name: 16311WALL_PH2_WallGeom04.dgn
Horiz. Scale: 1:200 Vert. Scale: As Noted
Unit Information Unit Leader Initials

FELSBURG HOLT & ULLEVIG 6300 South Syracuse Way Centennial, CO 80111 25 years of engineering paths to transportation solutions

Sheet Revisions

Date:	Comments	Init.

Colorado Department of Transportation
DEPARTMENT OF TRANSPORTATION
2000 South Holly Street
Denver, CO 80222
Phone: 303-972-9112 FAX: 303-972-9114
Region 6 RLB

As Constructed
No Revisions:
Revised:
Void:

I-25/SANTA FE INTERCHANGE
TEMPORARY WALL HCL
GEOMETRIC PLAN

Designer: P. STEIN
Detailer: R. DILLON
Sheet Subset: WALL
Structure Numbers
Subset Sheets: W44 of XX

Project No./Code
IM 0254-394
16311
Sheet Number 226

Design				Detail				Quantities			
	INITIAL	DATE			INITIAL	DATE			INITIAL	DATE
Designed By	PRS	09/10		Detailed By	RAD	09/10		Quantities By		
Checked By				Checked By				Checked By		

Revision Dates (Preliminary Stage Only)

IN PROGRESS

Print Date: 9/27/2010	Sheet Revisions		
File Name: 16311WALL_PH2_WallGeom05.dgn	Date:	Comments	Init.
Horiz. Scale: 1:1 Vert. Scale: As Noted			
Unit Information Unit Leader Initials			
FELSBURG HOLT & ULLEVIG 6300 South Syracuse Way Centennial, CO 80111 25 years of engineering paths to transportation solutions			

Colorado Department of Transportation
DEPARTMENT OF TRANSPORTATION
2000 South Holly Street
Denver, CO 80222
Phone: 303-972-9112 FAX: 303-972-9114
Region 6 RLB

As Constructed	
No Revisions:	
Revised:	
Void:	

I-25/SANTA FE INTERCHANGE
TEMPORARY WALL
HORIZONTAL CONTROL LINE DATA

Designer:	P. STEIN	Structure Numbers	
Detailer:	R. DILLON		
Sheet Subset:	WALL	Subset Sheets:	W45 of XX

Project No./Code	
IM 0254-394	
16311	
Sheet Number	227

R:\cdi 4:06:20 PM K:\08276\16311\Phase 2\Bridge\Drawings\16311WALL_PH2_WallGeom05.dgn
9/27/2010 CDOT-PDFDraftQuality_XM.pltcfg CDOT-PenTable.tbl

Revision Dates (Preliminary Stage Only)

Design			Detail			Quantities		
	INITIAL	DATE		INITIAL	DATE		INITIAL	DATE
Designed By	PRS	10/10	Detailed By	RAD	10/10	Quantities By		
Checked By			Checked By			Checked By		

IN PROGRESS

Print Date: 9/27/2010	Sheet Revisions			Colorado Department of Transportation	As Constructed
File Name: 16311WALL_PH2_TempWallElevs.dgn	Date:	Comments	Init.	2000 South Holly Street Denver, CO 80222 Phone: 303-972-9112 FAX: 303-972-9114	No Revisions:
Horiz. Scale: 1:1 Vert. Scale: As Noted				Region 6 RLB	Revised:
Unit Information Unit Leader Initials					Void:
FELSBURG HOLT & ULLEVIG 6300 South Syracuse Way Centennial, CO 80111 25 years of engineering paths to transportation solutions					

I-25/SANTA FE INTERCHANGE TEMPORARY WALL TOP OF WALL ELEVATIONS (1 OF 2)			Project No./Code
Designer: P. STEIN	Structure Numbers		IM 0254-394
Detailer: R. DILLON			16311
Sheet Subset: WALL	Subset Sheets: W46 of XX		Sheet Number 228

R:\cdi 4:06:24 PW K:\08276\16311\Phase 2\Bridge\Drawings\16311WALL_PH2_TempWallElevs.dgn
9/27/2010 CDOT-PDFDraftQuality_XM.pltcfg CDOT-PenTable.tbl

Design

	INITIAL	DATE
Designed By	PRS	10/10
Checked By		

Detail

	INITIAL	DATE
Detailed By	RAD	10/10
Checked By		

Quantities

	INITIAL	DATE
Quantities By		
Checked By		

Revision Dates (Preliminary Stage Only)

IN PROGRESS

Print Date: 9/27/2010	Sheet Revisions		
File Name: 16311WALL_PH2_TempWallElevs.dgn	Date:	Comments	Init.
Horiz. Scale: 1:1 Vert. Scale: As Noted			
Unit Information Unit Leader Initials			
FELSBURG HOLT & ULLEVIG 6300 South Syracuse Way Centennial, CO 80111 25 years of engineering paths to transportation solutions			

Colorado Department of Transportation
DEPARTMENT OF TRANSPORTATION
2000 South Holly Street
Denver, CO 80222
Phone: 303-972-9112 FAX: 303-972-9114
Region 6 RLB

As Constructed	
No Revisions:	
Revised:	
Void:	

I-25/SANTA FE INTERCHANGE
TEMPORARY WALL
TOP OF WALL ELEVATIONS (2 OF 2)

Designer:	P. STEIN	Structure Numbers	
Detailer:	R. DILLON		
Sheet Subset:	WALL	Subset Sheets:	W47 of XX

Project No./Code	
IM 0254-394	
16311	
Sheet Number	229

R:\cdi 4:06:27 PM K:\08276\16311\Phase 2\Bridge\Drawings\16311WALL_PH2_TempWallElevs.dgn
9/27/2010 CDOT-PDFDraftQuality_XM.pltcfg CDOT-PenTable.tbl

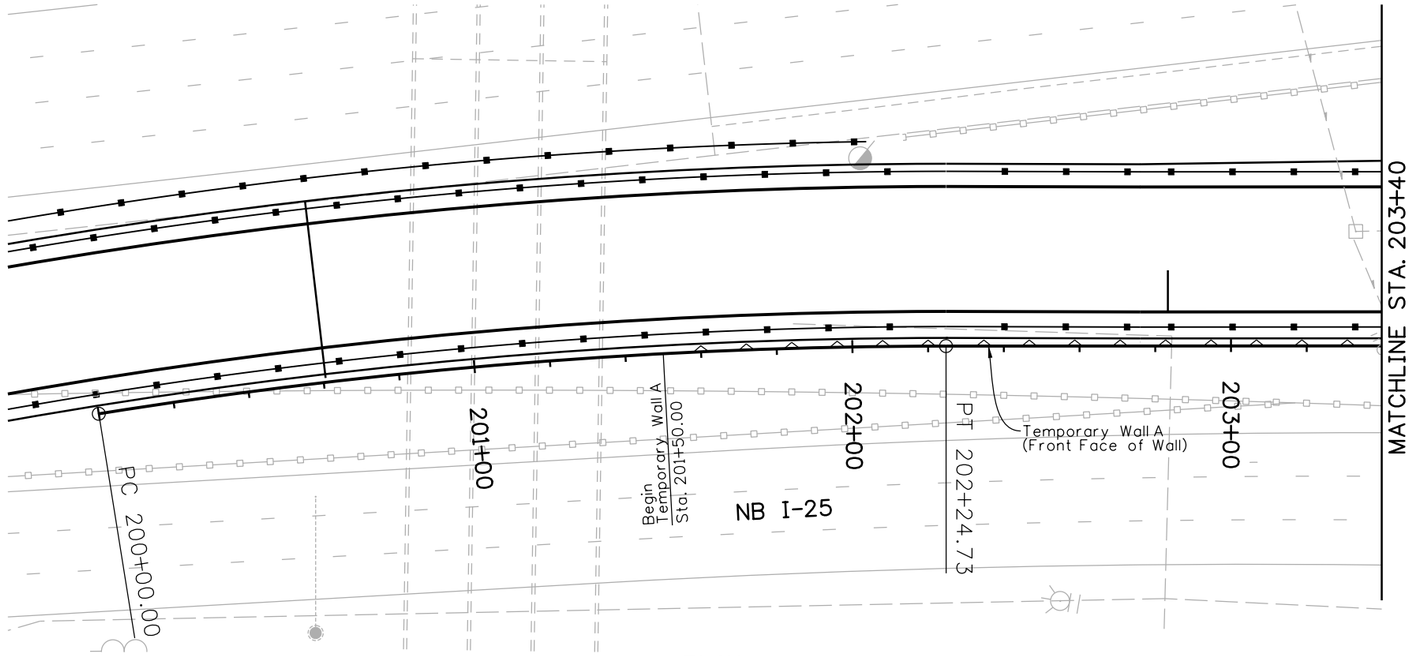

PLAN

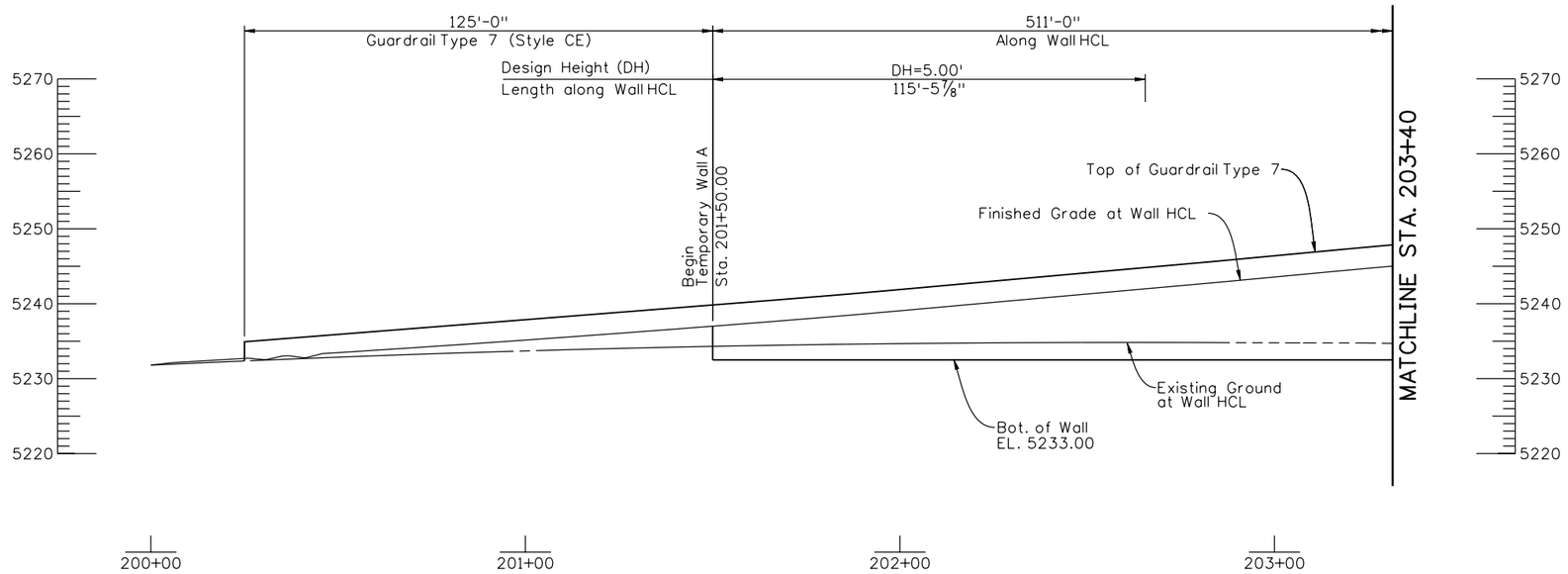

ELEVATION

Revision Dates (Preliminary Stage Only)

Design			Detail			Quantities		
	INITIAL	DATE		INITIAL	DATE		INITIAL	DATE
Designed By	PRS	09/10	Detailed By	RAD	09/10	Quantities By		
Checked By			Checked By			Checked By		

Ricdi 4:06:39 PM K:\08276\16311\Phase 2\Bridge\Drawings\16311WALL_PH2_TempWallA-GPE.dgn
9/27/2010 CDOT-PDFDraftQuality_XM.pltcfg CDOT-PenTable.tbl

Print Date: 9/27/2010
File Name: 16311WALL_PH2_TempWallA-GPE.dgn
Horiz. Scale: 1:40 Vert. Scale: As Noted
Unit Information Unit Leader Initials

FELSBURG HOLT & ULLEVIG 6300 South Syracuse Way Centennial, CO 80111 25 years of engineering paths to transportation solutions

Sheet Revisions		
Date:	Comments	Init.

Colorado Department of Transportation
DOT DEPARTMENT OF TRANSPORTATION
2000 South Holly Street
Denver, CO 80222
Phone: 303-972-9112 FAX: 303-972-9114
Region 6 RLB

As Constructed
No Revisions:
Revised:
Void:

I-25/SANTA FE INTERCHANGE
TEMPORARY WALL A
GENERAL LAYOUT (1 OF 2)

Designer: P. STEIN
Detailer: R. DILLON
Sheet Subset: WALL
Structure Numbers:
Subset Sheets: W48 of XX

Project No./Code
IM 0254-394
16311
Sheet Number 230

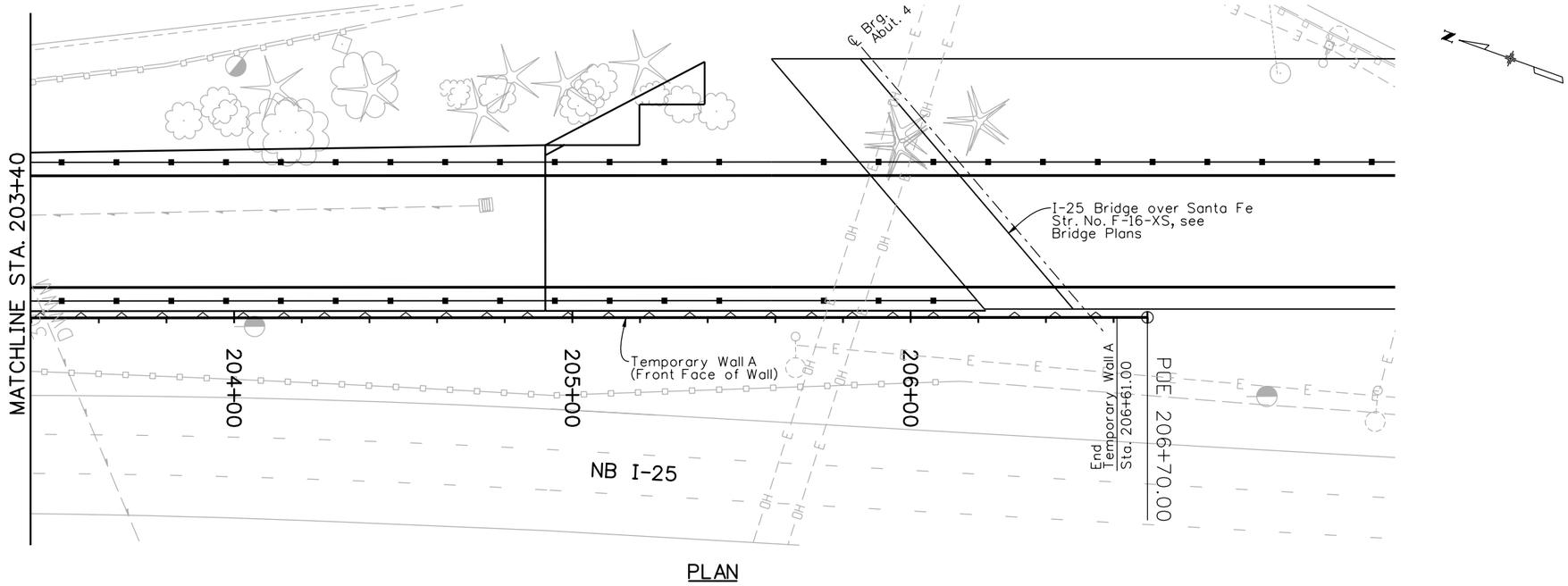

PLAN

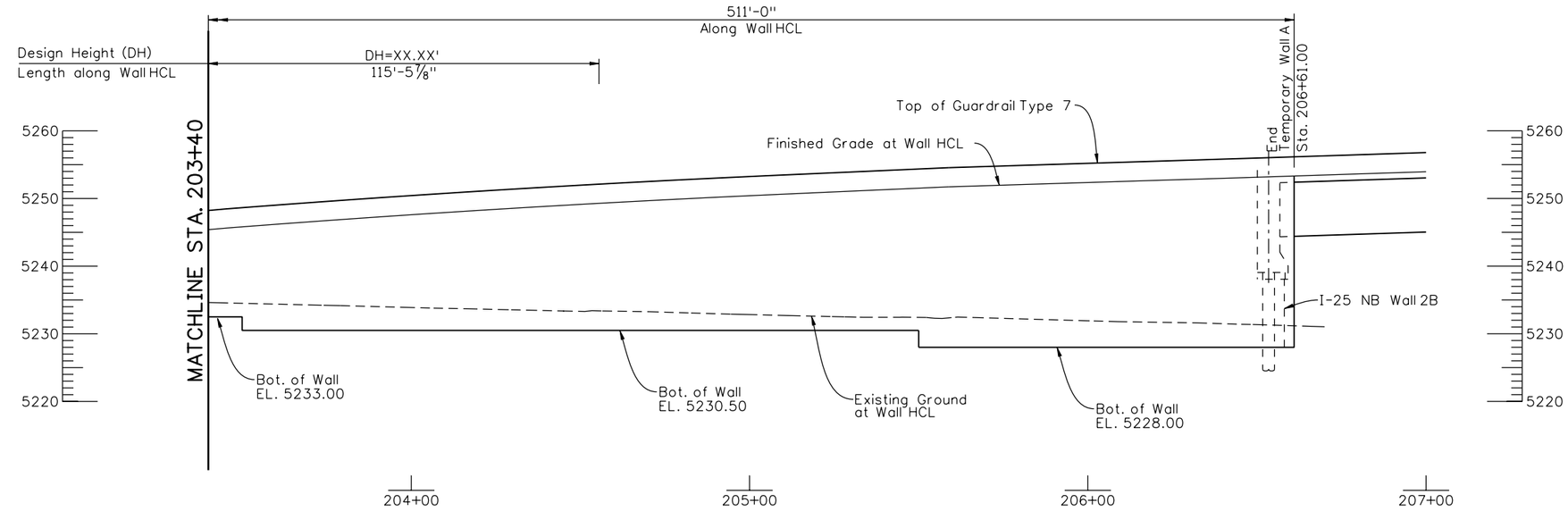

ELEVATION

Revision Dates (Preliminary Stage Only)

Design			Detail			Quantities		
	INITIAL	DATE		INITIAL	DATE		INITIAL	DATE
Designed By	PRS	09/10	Detailed By	RAD	09/10	Quantities By		
Checked By			Checked By			Checked By		

Ricdi 4:06:43 PM K:\08276\16311\Phase 2\Bridge\Drawings\16311WALL_PH2_TempWallA-GPE.dgn
9/27/2010 CDOT-PDFDraftQuality_XM.pltcfg CDOT-PenTable.tbl

Print Date: 9/27/2010
File Name: 16311WALL_PH2_TempWallA-GPE.dgn
Horiz. Scale: 1:40 Vert. Scale: As Noted
Unit Information Unit Leader Initials

FELSBURG HOLT & ULLEVIG 6300 South Syracuse Way Centennial, CO 80111 25 years of engineering paths to transportation solutions

0000

Sheet Revisions

Date:	Comments	Init.

Colorado Department of Transportation
DEPARTMENT OF TRANSPORTATION
2000 South Holly Street
Denver, CO 80222
Phone: 303-972-9112 FAX: 303-972-9114
Region 6 RLB

As Constructed
No Revisions:
Revised:
Void:

I-25/SANTA FE INTERCHANGE
TEMPORARY WALL A
GENERAL LAYOUT (2 OF 2)

Designer: P. STEIN
Detailer: R. DILLON
Sheet Subset: WALL
Structure Numbers
Subset Sheets: W49 of XX

Project No./Code
IM 0254-394
16311
Sheet Number 231

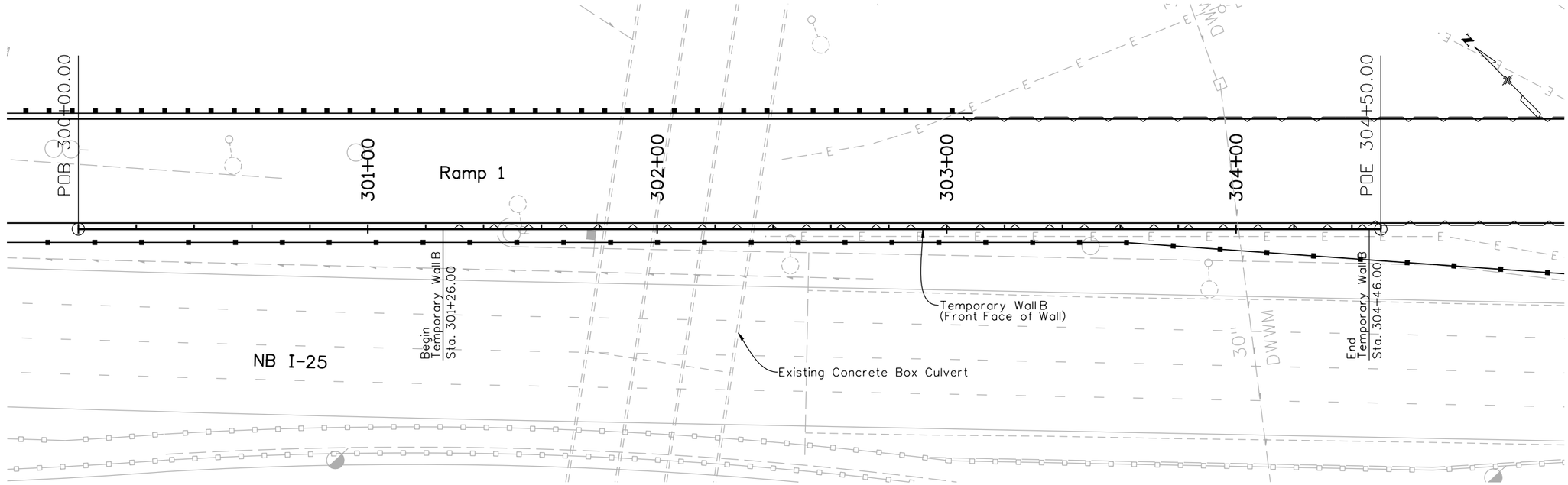

PLAN

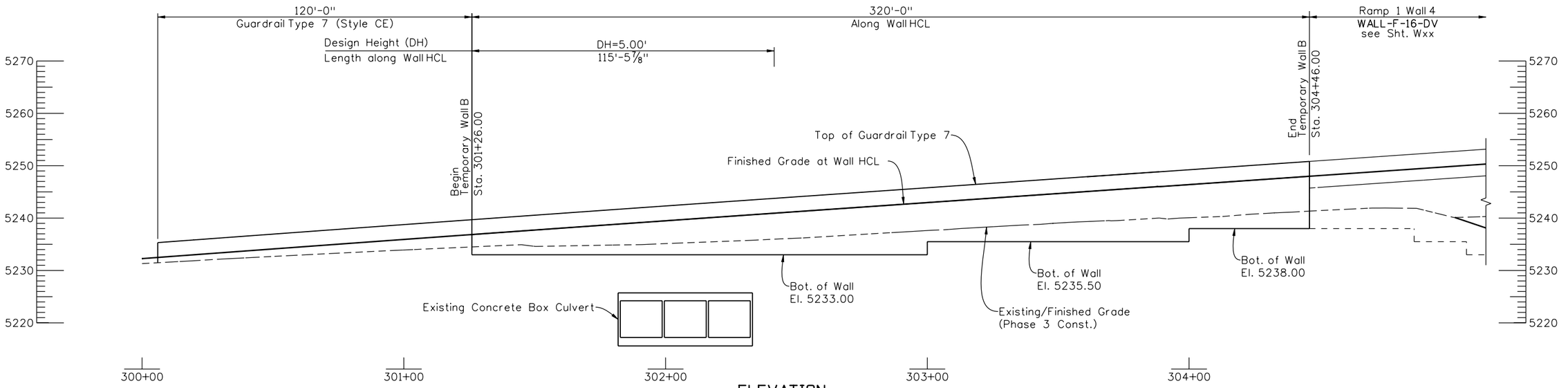

ELEVATION

Revision Dates (Preliminary Stage Only)

Design			Detail			Quantities		
	INITIAL	DATE		INITIAL	DATE		INITIAL	DATE
Designed By	PRS	09/10	Detailed By	RAD	09/10	Quantities By		
Checked By			Checked By			Checked By		

R:\cdi 4:06:54 PW K:\08276\16311\Phase 2\Bridge\Drawings\16311WALL_PH2_TempWallB-GPE.dgn
9/27/2010 CDOT-PDFDraftQuality_XM.pltcfg CDOT-PenTable.tbl

Print Date: 9/27/2010
File Name: 16311WALL_PH2_TempWallB-GPE.dgn
Horiz. Scale: 1:40 Vert. Scale: As Noted
Unit Information Unit Leader Initials

FELSBURG HOLT & ULLEVIG 6300 South Syracuse Way Centennial, CO 80111 25 years of engineering paths to transportation solutions

Sheet Revisions		
Date:	Comments	Init.

Colorado Department of Transportation
DEPARTMENT OF TRANSPORTATION
2000 South Holly Street
Denver, CO 80222
Phone: 303-972-9112 FAX: 303-972-9114
Region 6 RLB

As Constructed
No Revisions:
Revised:
Void:

I-25/SANTA FE INTERCHANGE
TEMPORARY WALL B
GENERAL LAYOUT

Designer: P. STEIN
Detailer: R. DILLON
Sheet Subset: WALL
Structure Numbers:
Subset Sheets: W50 of XX

Project No./Code
IM 0254-394
16311
Sheet Number 232

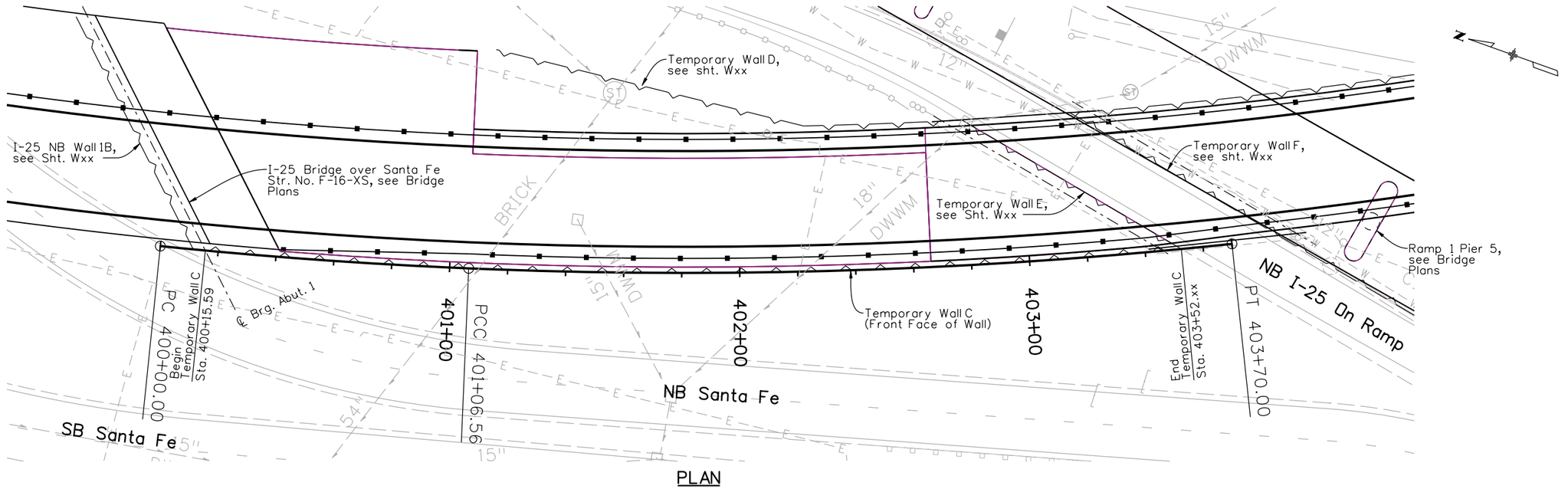

Print Date: 9/27/2010	Sheet Revisions		
File Name: 16311WALL_PH2_TempWallC-GPE.dgn	Date:	Comments	Init.
Horiz. Scale: 1:40 Vert. Scale: As Noted			
Unit Information Unit Leader Initials			

FELSBURG HOLT & ULLEVIG 6300 South Syracuse Way Centennial, CO 80111 25 years of engineering paths to transportation solutions

Colorado Department of Transportation
DEPARTMENT OF TRANSPORTATION
2000 South Holly Street
Denver, CO 80222
Phone: 303-972-9112 FAX: 303-972-9114
Region 6 RLB

As Constructed	
No Revisions:	
Revised:	
Void:	

I-25/SANTA FE INTERCHANGE
TEMPORARY WALL C
GENERAL LAYOUT

Designer:	P. STEIN	Structure Numbers	
Detailer:	R. DILLON		
Sheet Subset:	WALL	Subset Sheets:	W51 of XX

Project No./Code	
IM 0254-394	
16311	
Sheet Number	233

Revision Dates (Preliminary Stage Only)

Design				Detail				Quantities			
	INITIAL	DATE		INITIAL	DATE		INITIAL	DATE	
Designed By	PRS	09/10	Detailed By	RAD	09/10	Quantities By		
Checked By			Checked By			Checked By		

Ricdi 4:07:01 PM K:\08276\16311\Phase 2\Bridge\Drawings\16311WALL_PH2_TempWallC-GPE.dgn
9/27/2010 CDOT-PDFDraftQuality_XM.pltcfg CDOT-PenTable.tbl

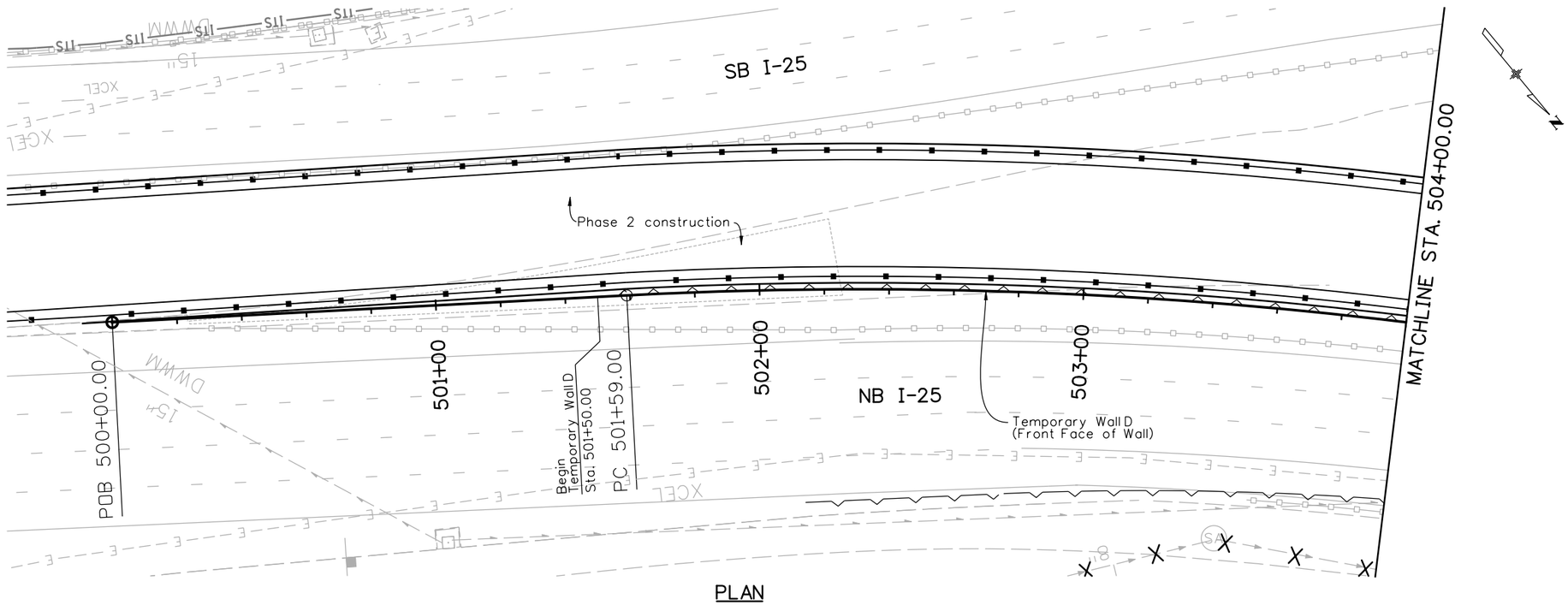

Revision Dates (Preliminary Stage Only)

Design			Detail			Quantities		
	INITIAL	DATE		INITIAL	DATE		INITIAL	DATE
Designed By	PRS	09/10	Detailed By	RAD	09/10	Quantities By		
Checked By			Checked By			Checked By		

Print Date: 9/27/2010
File Name: 16311WALL_PH2_TempWallD-GPE.dgn
Horiz. Scale: 1:40 Vert. Scale: As Noted
Unit Information Unit Leader Initials

FELSBURG HOLT & ULLEVIG
6300 South Syracuse Way
Centennial, CO 80111
25 years of engineering paths to transportation solutions

Sheet Revisions		
Date:	Comments	Init.

Colorado Department of Transportation
DEPARTMENT OF TRANSPORTATION
2000 South Holly Street
Denver, CO 80222
Phone: 303-972-9112 FAX: 303-972-9114
Region 6 RLB

As Constructed
No Revisions:
Revised:
Void:

I-25/SANTA FE INTERCHANGE
TEMPORARY WALL D
GENERAL LAYOUT (1 OF 3)

Designer: P. STEIN
Detailer: R. DILLON
Sheet Subset: WALL
Structure Numbers:
Subset Sheets: W52 of XX

Project No./Code
IM 0254-394
16311
Sheet Number 234

R:\cdi 4:07:09 PM K:\08276\16311\Phase 2\Bridge\Drawings\16311WALL_PH2_TempWallD-GPE.dgn
9/27/2010 CDOT-PDFDraftQuality_XM.pltcfg CDOT-PenTable.tbl

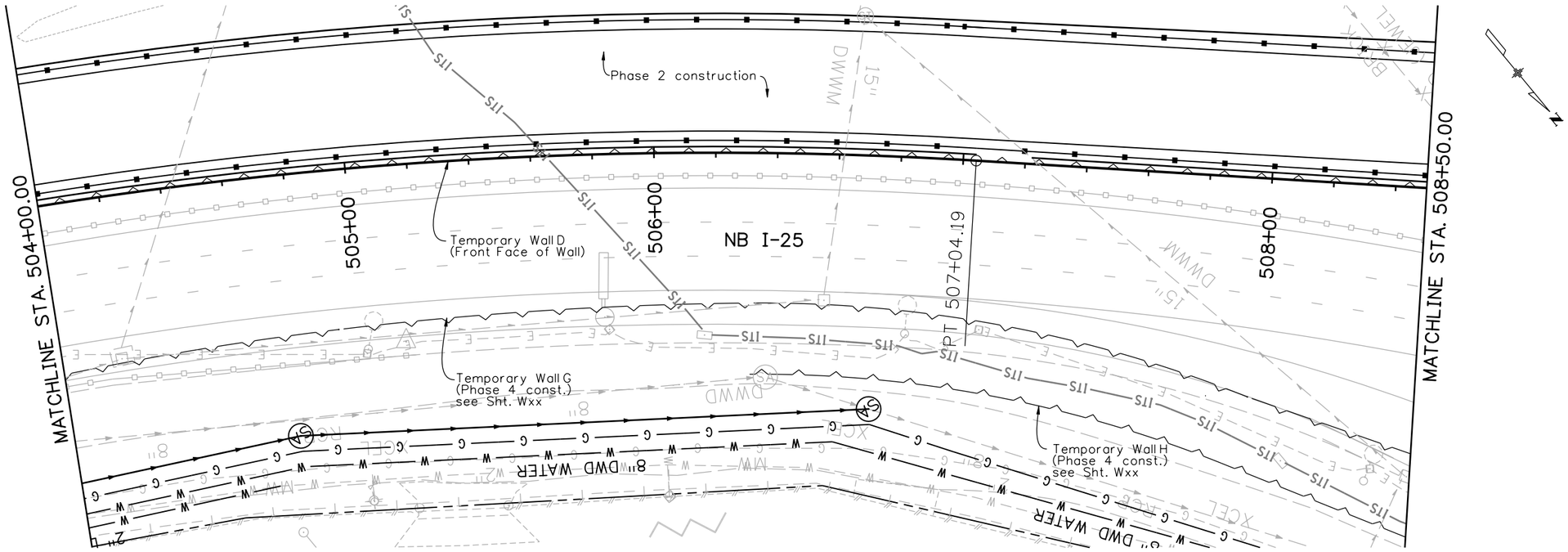

PLAN

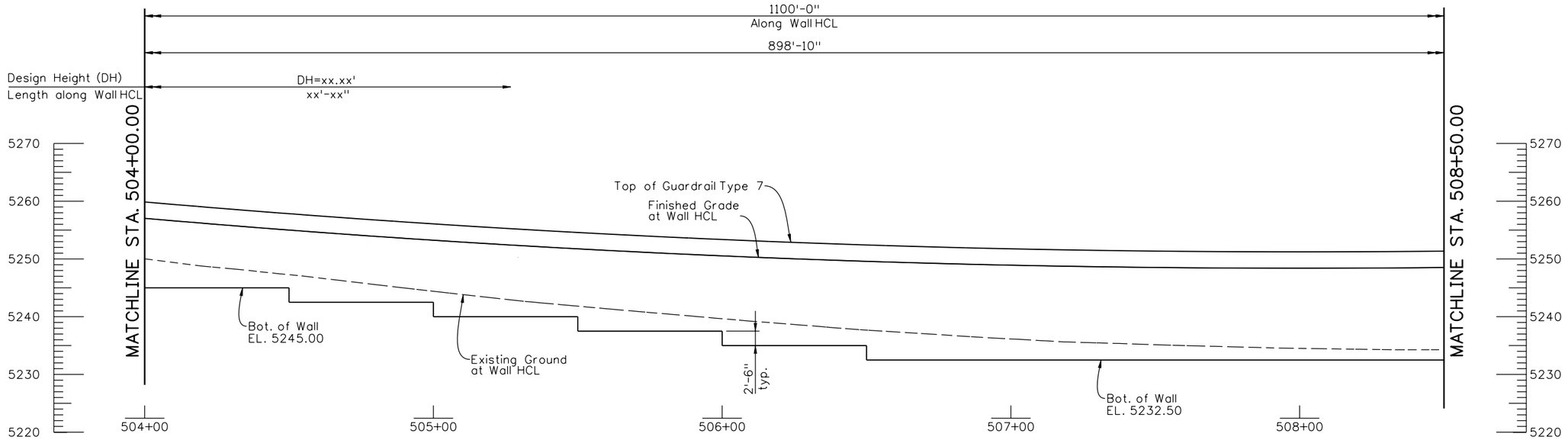

ELEVATION

Revision Dates (Preliminary Stage Only)

Design			Detail			Quantities		
	INITIAL	DATE		INITIAL	DATE		INITIAL	DATE
Designed By	PRS	09/10	Detailed By	RAD	09/10	Quantities By		
Checked By			Checked By			Checked By		

Print Date: 9/27/2010
File Name: 16311WALL_PH2_TempWallD-GPE.dgn
Horiz. Scale: 1:40 Vert. Scale: As Noted
Unit Information Unit Leader Initials

FELSBURG HOLT & ULLEVIG
6300 South Syracuse Way
Centennial, CO 80111
25 years of engineering paths to transportation solutions

Sheet Revisions		
Date:	Comments	Init.

Colorado Department of Transportation
DEPARTMENT OF TRANSPORTATION
2000 South Holly Street
Denver, CO 80222
Phone: 303-972-9112 FAX: 303-972-9114
Region 6 RLB

As Constructed
No Revisions:
Revised:
Void:

I-25/SANTA FE INTERCHANGE
TEMPORARY WALL D
GENERAL LAYOUT (2 OF 3)

Designer: P. STEIN
Detailer: R. DILLON
Sheet Subset: WALL
Structure Numbers
Subset Sheets: W53 of XX

Project No./Code
IM 0254-394
16311
Sheet Number 235

R:\cdi 4:07:17 PM K:\08276\16311\Phase 2\Bridge\Drawings\16311WALL_PH2_TempWallD-GPE.dgn
9/27/2010 CDOT-PDFDraftQuality_XM.pltcfg CDOT-PenTable.tbl

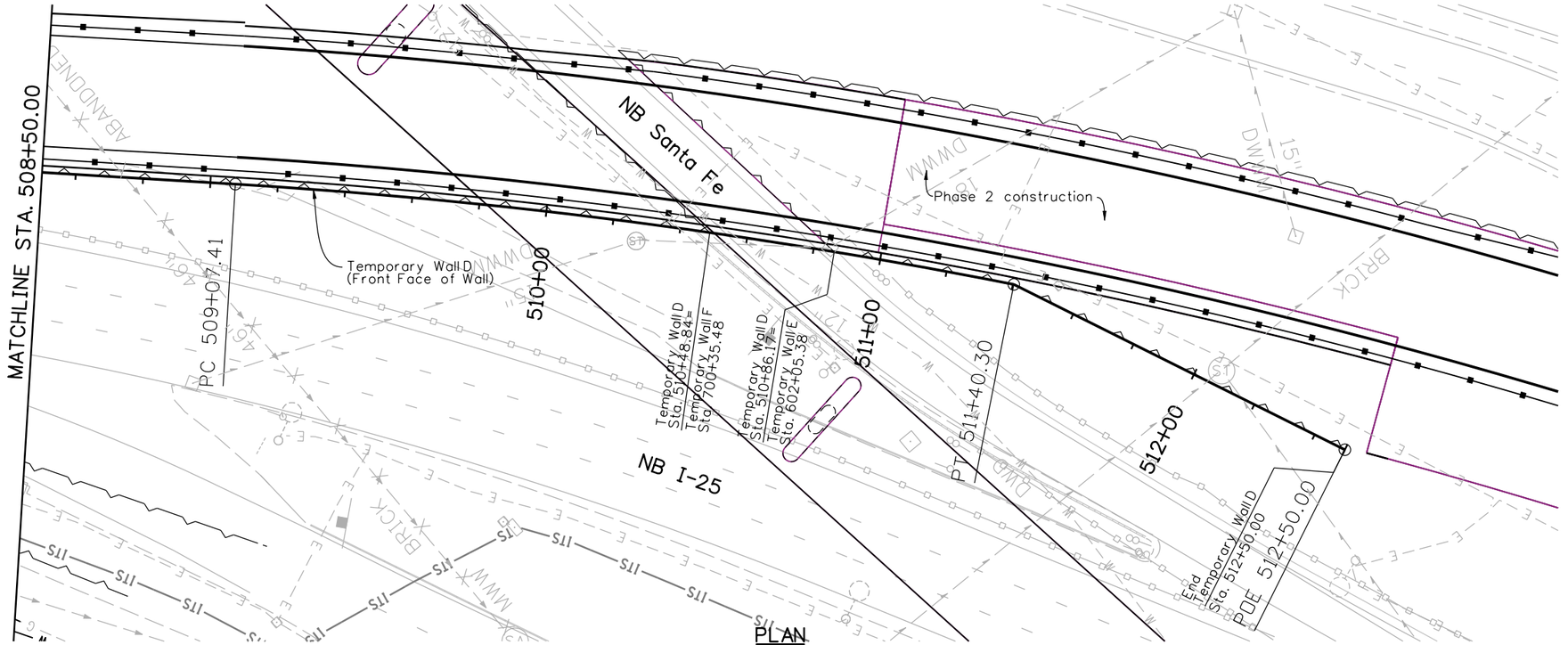

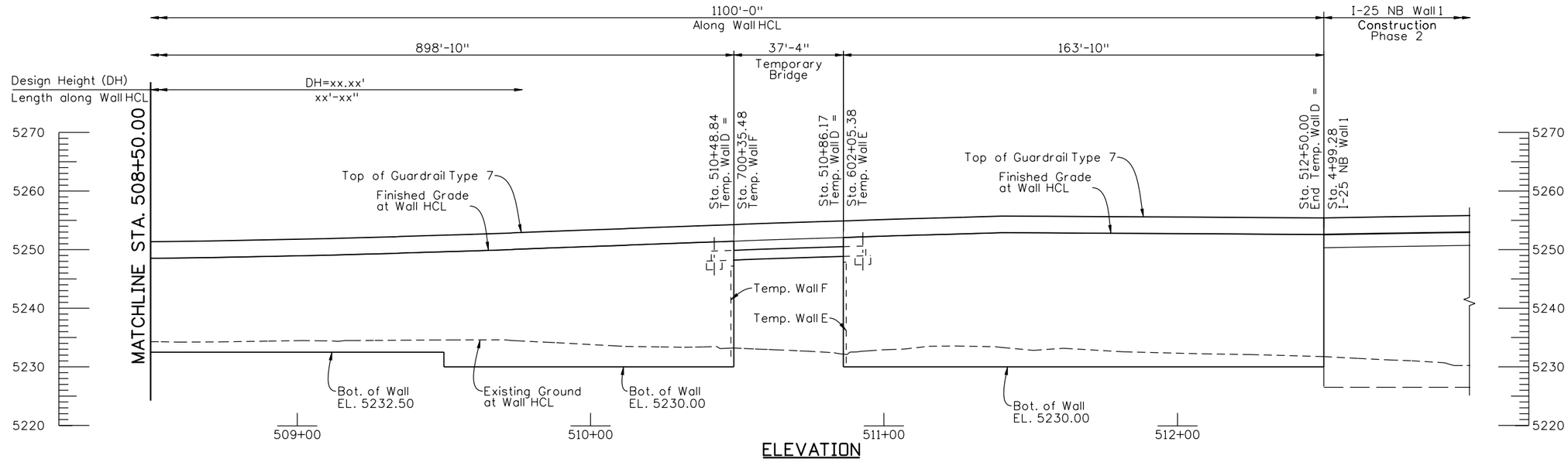

ELEVATION

Revision Dates (Preliminary Stage Only)

Quantities					
	INITIAL	DATE		INITIAL	DATE
Designed By			Quantities By		
Checked By			Checked By		

Detail					
	INITIAL	DATE		INITIAL	DATE
Detailed By	RAD	09/10	Checked By		

Design					
	INITIAL	DATE		INITIAL	DATE
Designed By	PRS	09/10	Checked By		
Checked By					

Ricdi 4:07:25 PM K:\08276\16311\Phase 2\Bridge\Drawings\16311WALL_PH2_TempWallD-GPE.dgn
9/27/2010 CDOT-PDFDraftQuality_XM.pltcfg CDOT-PenTable.tbl

Print Date: 9/27/2010
File Name: 16311WALL_PH2_TempWallD-GPE.dgn
Horiz. Scale: 1:40 Vert. Scale: As Noted
Unit Information Unit Leader Initials

FELSBURG HOLT & ULLEVIG
6300 South Syracuse Way
Centennial, CO 80111
25 years of engineering paths to transportation solutions

0000

Sheet Revisions		
Date:	Comments	Init.

Colorado Department of Transportation
DEPARTMENT OF TRANSPORTATION
2000 South Holly Street
Denver, CO 80222
Phone: 303-972-9112 FAX: 303-972-9114
Region 6 RLB

As Constructed
No Revisions:
Revised:
Void:

I-25/SANTA FE INTERCHANGE
TEMPORARY WALL D
GENERAL LAYOUT (3 OF 3)

Designer:	P. STEIN	Structure Numbers	
Detailer:	R. DILLON		
Sheet Subset:	WALL	Subset Sheets:	W54 of XX

Project No./Code
IM 0254-394
16311
Sheet Number 236

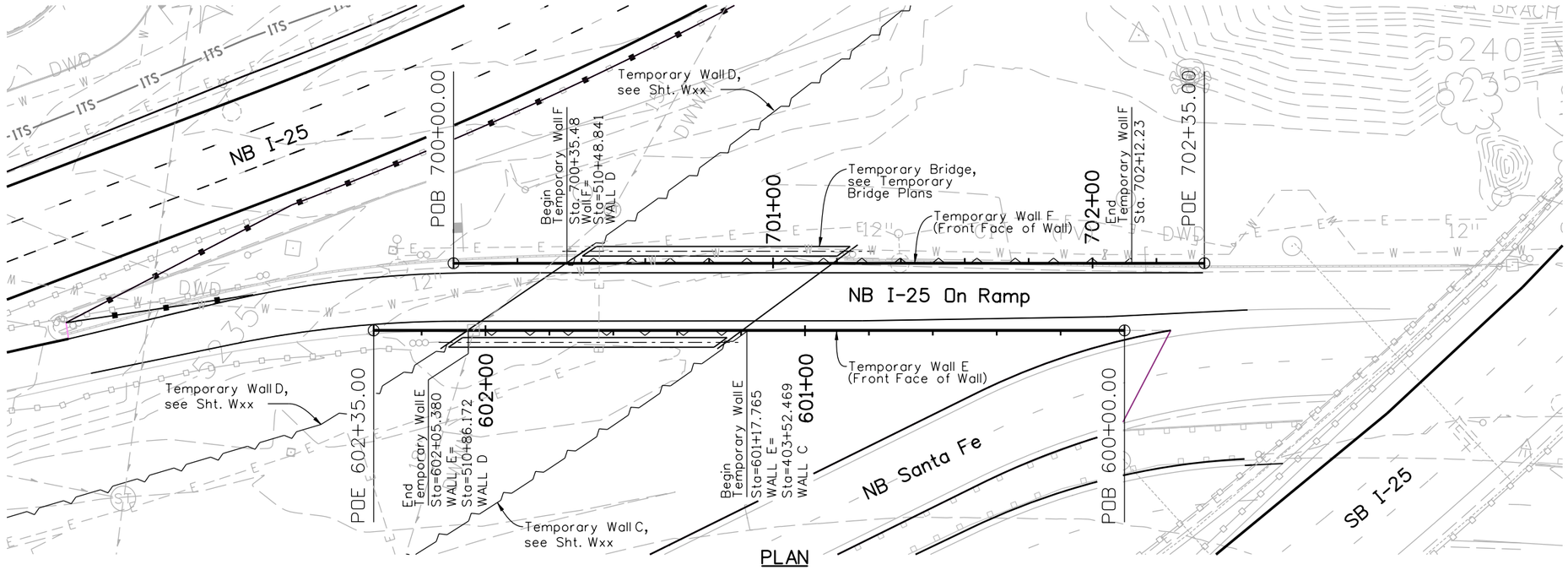

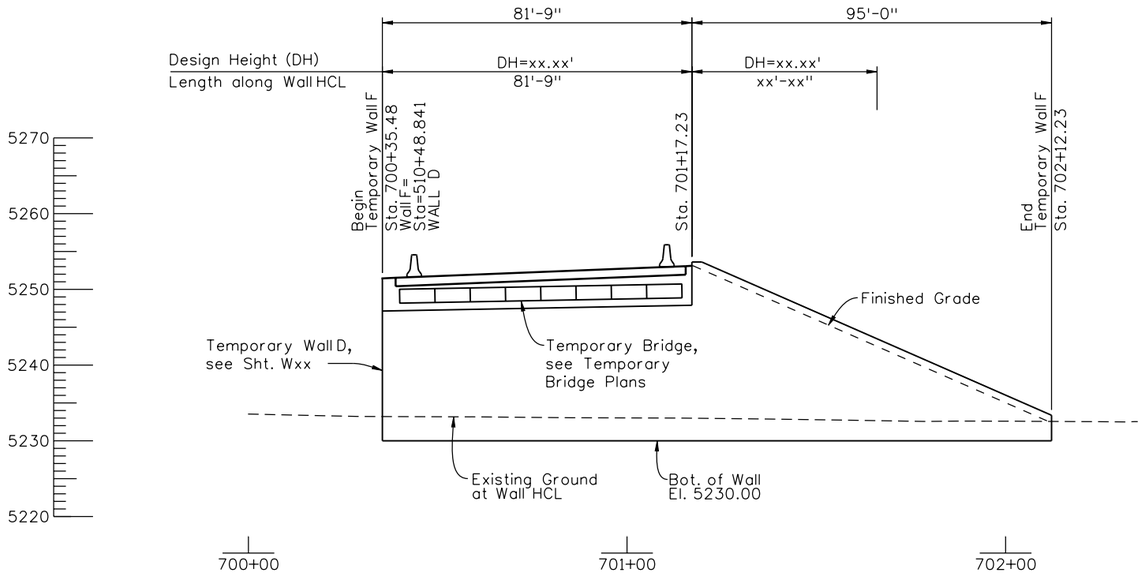

TEMPORARY WALL F ELEVATION

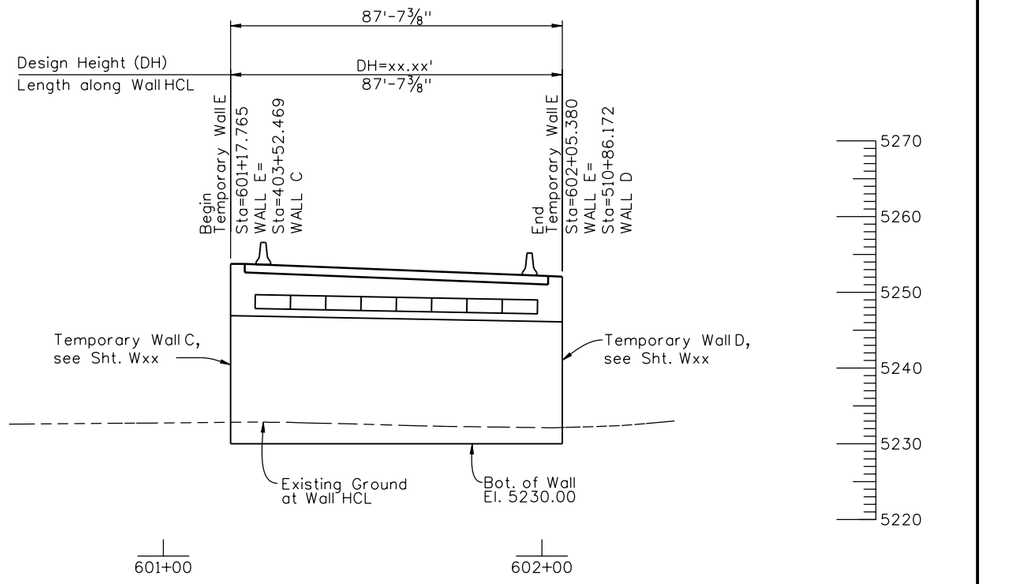

TEMPORARY WALL E ELEVATION

Revision Dates (Preliminary Stage Only)

Design				Detail				Quantities			
	INITIAL	DATE		INITIAL	DATE		INITIAL	DATE
Designed By	PRS	09/10	Detailed By	RAD	09/10	Quantities By		
Checked By			Checked By			Checked By		

R:\cdi 4:07:33 PM K:\08276\16311\Phase 2\Bridge\Drawings\16311WALL_PH2_TempWallE-F-GPE.dgn
9/27/2010 CDOT-PDFDraftQuality_XM.pltcfg CDOT-PenTable.tbl

Print Date: 9/27/2010
File Name: 16311WALL_PH2_TempWallE-F-GPE.dgn
Horiz. Scale: 1:40 Vert. Scale: As Noted
Unit Information Unit Leader Initials

FELSBURG HOLT & ULLEVIG 6300 South Syracuse Way Centennial, CO 80111 25 years of engineering paths to transportation solutions

Sheet Revisions		
Date:	Comments	Init.

Colorado Department of Transportation
DEPARTMENT OF TRANSPORTATION
2000 South Holly Street
Denver, CO 80222
Phone: 303-972-9112 FAX: 303-972-9114
Region 6 RLB

As Constructed
No Revisions:
Revised:
Void:

I-25/SANTA FE INTERCHANGE
TEMPORARY WALLS E & F
GENERAL LAYOUT

Designer: P. STEIN
Detailer: R. DILLON
Sheet Subset: WALL
Structure Numbers:
Subset Sheets: W55 of XX

Project No./Code
IM 0254-394
16311
Sheet Number 237

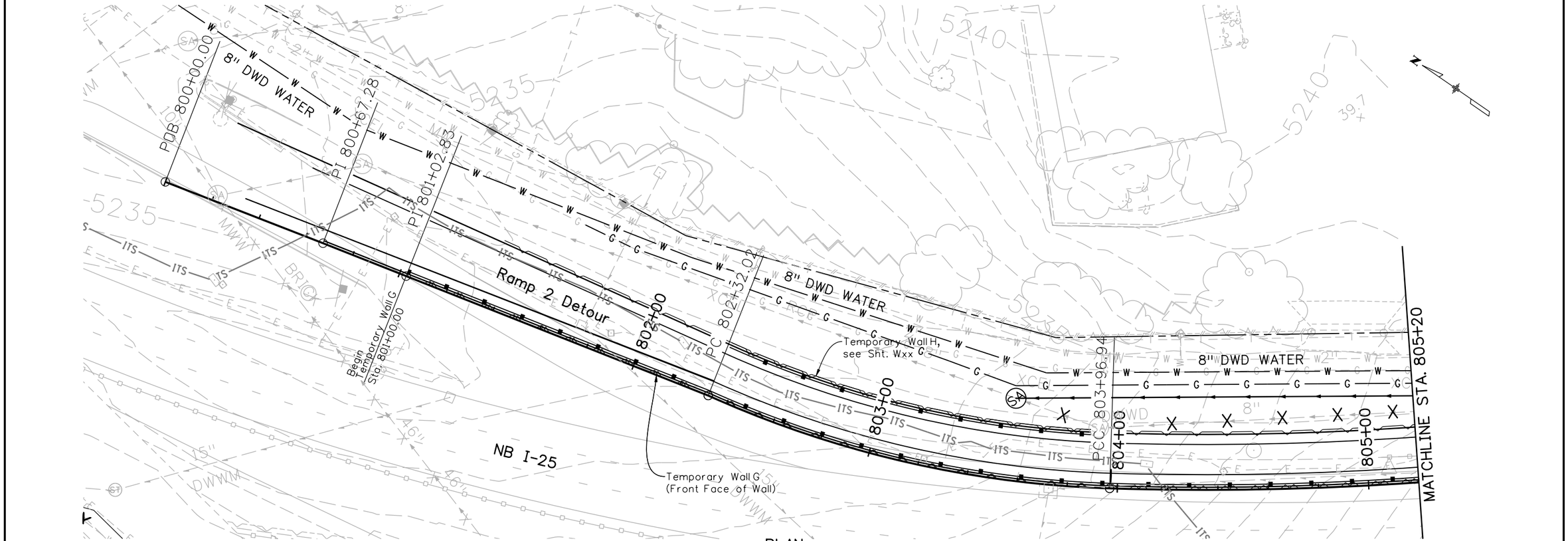

PLAN

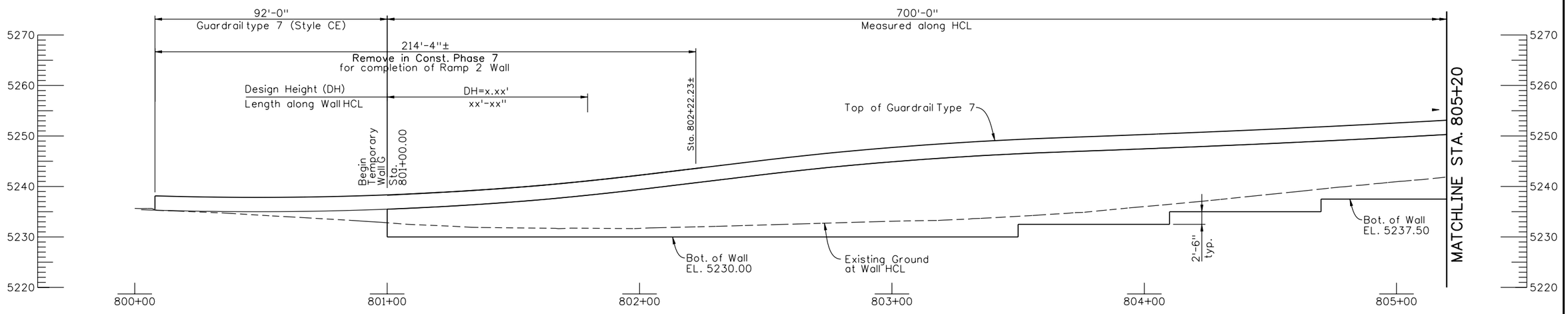

ELEVATION

Design			Detail			Quantities		
Designed By	INITIAL	DATE	Detailed By	INITIAL	DATE	Quantities By	INITIAL	DATE
Checked By	PRS	09/10	Checked By	RAD	09/10	Checked By		

Revision Dates (Preliminary Stage Only)

Print Date: 9/27/2010	
File Name: 16311WALL_PH2_TempWallG-GPE.dgn	
Horiz. Scale: 1:40	Vert. Scale: As Noted
Unit Information	Unit Leader Initials

FELSBURG HOLT & ULLEVIG 6300 South Syracuse Way Centennial, CO 80111 25 years of engineering paths to transportation solutions

Sheet Revisions		
Date:	Comments	Init.

Colorado Department of Transportation
DEPARTMENT OF TRANSPORTATION
2000 South Holly Street
Denver, CO 80222
Phone: 303-972-9112 FAX: 303-972-9114
Region 6 RLB

As Constructed	
No Revisions:	
Revised:	
Void:	

I-25/SANTA FE INTERCHANGE
TEMPORARY WALL G
GENERAL LAYOUT (1 OF 2)

Designer:	P. STEIN	Structure Numbers	
Detailer:	R. DILLON		
Sheet Subset:	WALL	Subset Sheets:	W56 of XX

Project No./Code	
IM 0254-394	
16311	
Sheet Number	238

Ricdi 4:07:41 PM K:\08276\16311\Phase 2\Bridge\Drawings\16311WALL_PH2_TempWallG-GPE.dgn
9/27/2010 CDOT-PDFDraftQuality_XM.pltcfg CDOT-PenTable.tbl

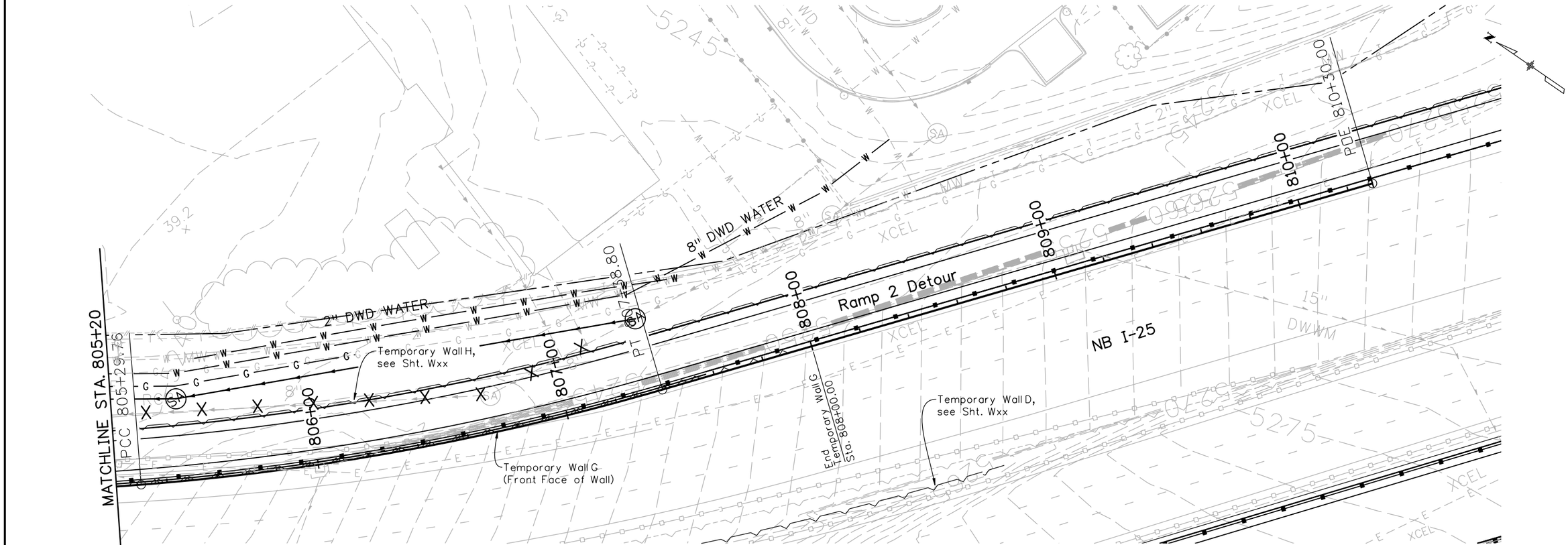

PLAN

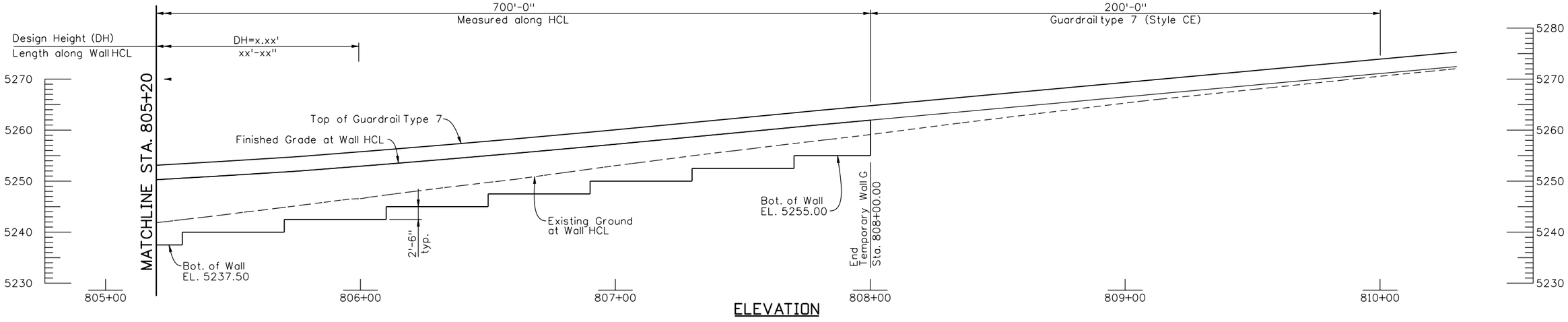

ELEVATION

Quantities	INITIAL	DATE
Designed By		Quantities By
Checked By		Checked By

Detail	INITIAL	DATE
Designed By	RAD	09/10
Checked By		Quantities By

Design	INITIAL	DATE
Designed By	PRS	09/10
Checked By		Checked By

Revision Dates	(Preliminary Stage Only)

Print Date: 9/27/2010
File Name: 16311WALL_PH2_TempWallG-GPE.dgn
Horiz. Scale: 1:40 Vert. Scale: As Noted
Unit Information XX Unit Leader Initials

FELSBURG HOLT & ULLEVIG
6300 South Syracuse Way
Centennial, CO 80111
25 years of engineering paths to transportation solutions

Sheet Revisions		
Date:	Comments	Init.

Colorado Department of Transportation
2000 South Holly Street
Denver, CO 80222
Phone: 303-972-9112 FAX: 303-972-9114
Region 6 RLB

As Constructed
No Revisions:
Revised:
Void:

I-25/SANTA FE INTERCHANGE
TEMPORARY WALL G
GENERAL LAYOUT (2 OF 2)

Designer: P. STEIN
Detailer: R. DILLON
Sheet Subset: WALL
Structure Numbers:
Subset Sheets: W57 of XX

Project No./Code
IM 0254-394
16311
Sheet Number 239

Ricdil 4:07:50 PM K:\08276\16311\Phase 2\Bridge\Drawings\16311WALL_PH2_TempWallG-GPE.dgn
9/27/2010 CDOT-PDFDraftQuality_XM.pltcfg CDOT-PenTable.tbl

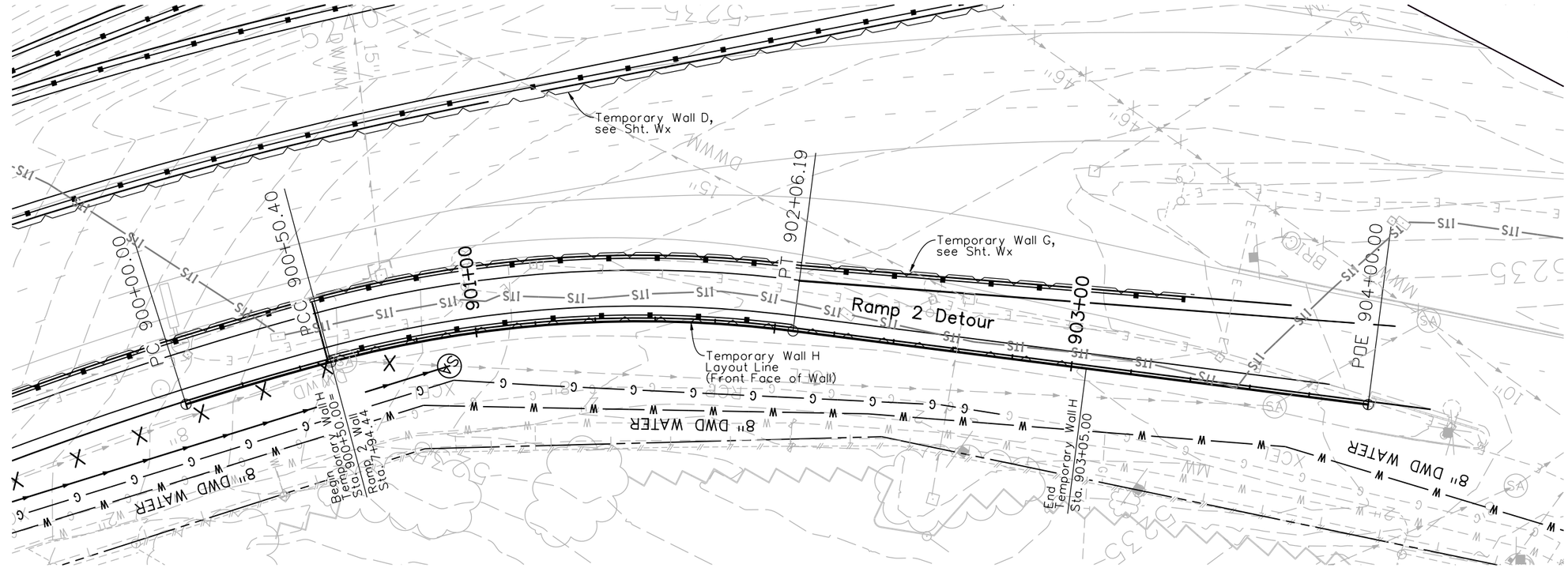

PLAN

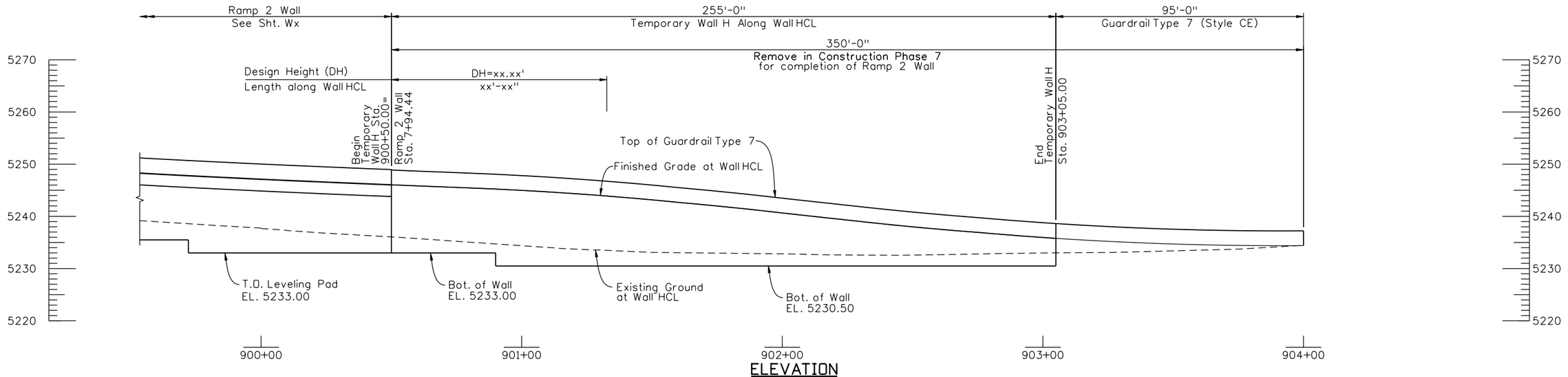

ELEVATION

Revision Dates (Preliminary Stage Only)

Design			Detail			Quantities		
	INITIAL	DATE		INITIAL	DATE		INITIAL	DATE
Designed By	PRS	09/10	Detailed By	RAD	09/10	Quantities By		
Checked By			Checked By			Checked By		

Print Date: 9/27/2010	
File Name: 16311WALL_PH2_TempWallH-GPE.dgn	
Horiz. Scale: 1:40	Vert. Scale: As Noted
Unit Information	Unit Leader Initials

FELSBURG HOLT & ULLEVIG
6300 South Syracuse Way
Centennial, CO 80111
25 years of engineering paths to transportation solutions

Sheet Revisions		
Date:	Comments	Init.

Colorado Department of Transportation
DEPARTMENT OF TRANSPORTATION
2000 South Holly Street
Denver, CO 80222
Phone: 303-972-9112 FAX: 303-972-9114
Region 6 RLB

As Constructed
No Revisions:
Revised:
Void:

I-25/SANTA FE INTERCHANGE
TEMPORARY WALL H
GENERAL LAYOUT

Designer:	P. STEIN	Structure Numbers	
Detailer:	R. DILLON		
Sheet Subset:	WALL	Subset Sheets:	W58 of XX

Project No./Code
IM 0254-394
16311
Sheet Number 240

R:\cdi 4:08:01 PM K:\08276\16311\Phase 2\Bridge\Drawings\16311WALL_PH2_TempWallH-GPE.dgn
9/27/2010 CDOT-PDFDraftQuality_XM.pltcfg CDOT-PenTable.tbl

IN PROGRESS

Design			Detail			Quantities		
	INITIAL	DATE		INITIAL	DATE		INITIAL	DATE
Designed By	PRS	09/10	Detailed By	RAD	09/10	Quantities By		
Checked By			Checked By			Checked By		

Revision Dates (Preliminary Stage Only)

Print Date: 9/27/2010
File Name: 16311WALL_PH2_TempWallDetails.dgn
Horiz. Scale: 1:1 Vert. Scale: As Noted
Unit Information Unit Leader Initials

Summit South Syracuse Way
Summit Drive, Suite 330
Sarah Lamb, Ohio 43212
Tel: (614) 486-6217
Sharing paths to transportation solutions

Sheet Revisions		
Date:	Comments	Init.

Colorado Department of Transportation
2000 South Holly Street
Denver, CO 80222
Phone: 303-972-9112 FAX: 303-972-9114
Region 6 RLB

As Constructed
No Revisions:
Revised:
Void:

I-25/SANTA FE INTERCHANGE
TEMPORARY WALL DETAILS

Designer:	P. STEIN	Structure Numbers	
Detailer:	R. DILLON		
Sheet Subset:	WALL	Subset Sheets:	W59 of XX

Project No./Code
IM 0254-394
16311
Sheet Number 241

Ricdil 4:08:06 PM K:\08276\16311\Phase 2\Bridge\Drawings\16311WALL_PH2_TempWallDetails.dgn
9/27/2010 CDOT-PDFDraftQuality_XM.pltcfg CDOT-PenTable.tbl

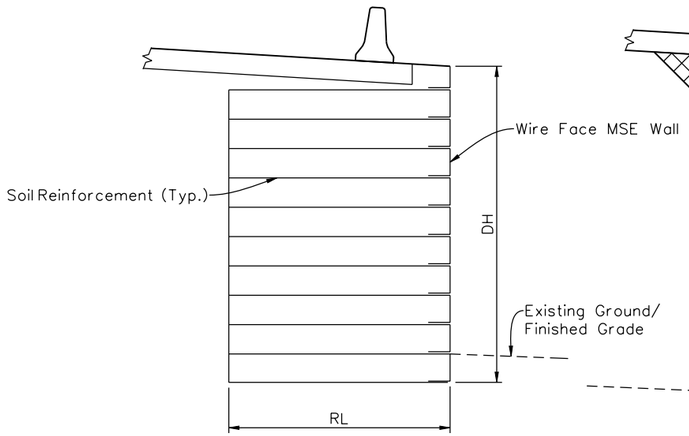

MECHANICAL REINFORCEMENT OF SOIL

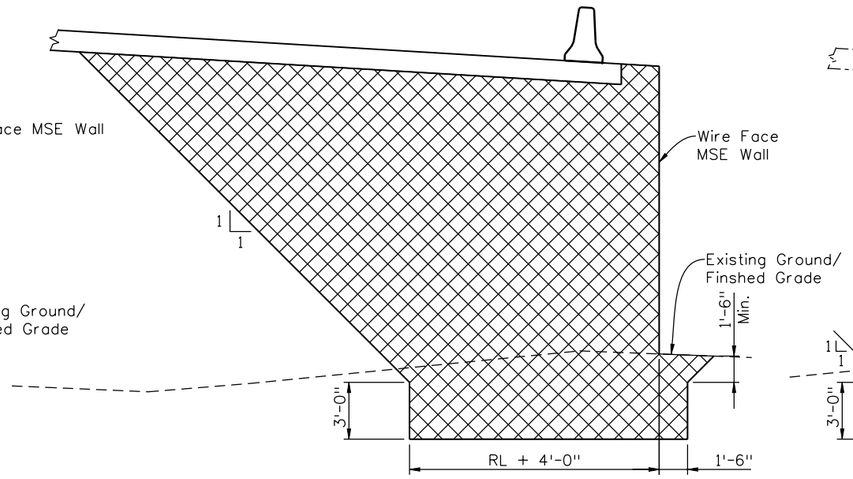

STRUCTURAL BACKFILL

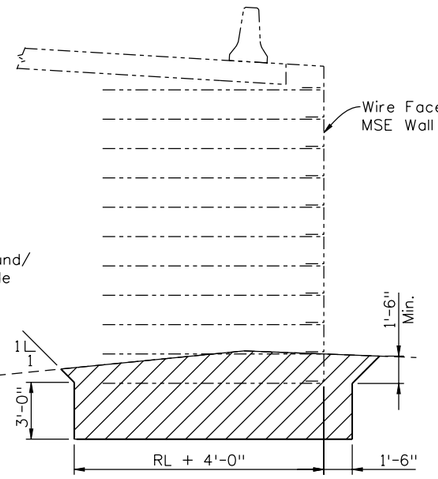

ABBREVIATIONS

DH = Design Height (ft.)
RL = Reinforcing Length (ft.)

LEGEND

- Pay Limit for Structure (Class 1) Backfill
- Pay Limits for Mechanically Stabilized Earth
- Pay Limit for Structure Excavation

▲ See Project Special Provision Section 207-Topsoil

TEMPORARY WALLS A, B, C, & D

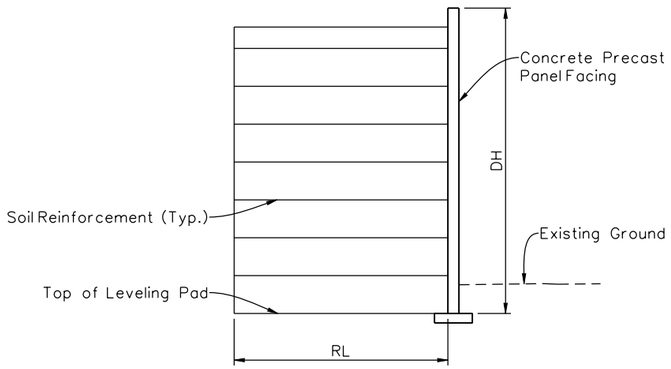

MECHANICAL REINFORCEMENT OF SOIL

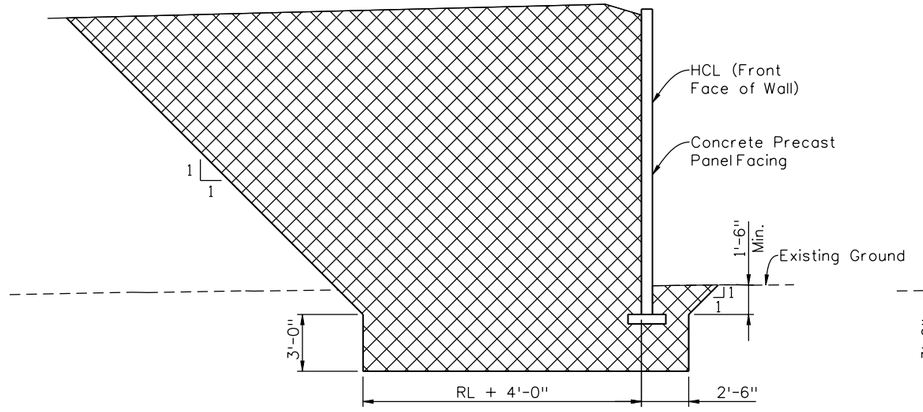

STRUCTURAL BACKFILL

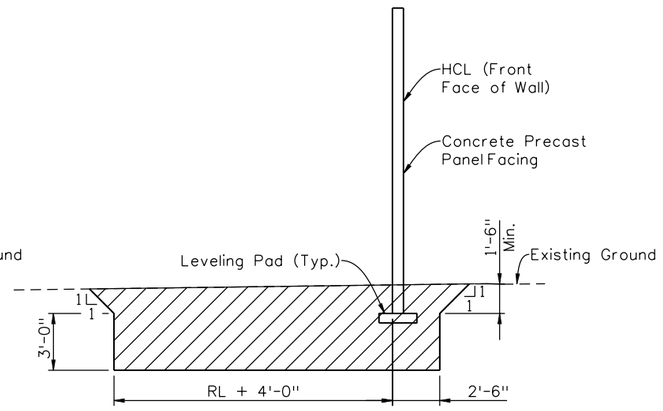

STRUCTURAL EXCAVATION

TEMPORARY WALLS E & F

Design				Detail				Quantities			
	INITIAL	DATE			INITIAL	DATE			INITIAL	DATE
Designed By	PRS	03/10		Detailed By	RAD	03/10		Quantities By		
Checked By				Checked By	PRS			Checked By		

(Preliminary Stage Only)

Revision Dates

Print Date: 9/27/2010	
File Name: 16311WALL_PH2_TempWallExcav01.dgn	
Horiz. Scale: 1:1	Vert. Scale: As Noted
Unit Information	Unit Leader Initials

FELSBURG HOLT & ULLEVIG 6300 South Syracuse Way Centennial, CO 80111 25 years of engineering paths to transportation solutions

Sheet Revisions		
Date:	Comments	Init.

Colorado Department of Transportation
DEPARTMENT OF TRANSPORTATION
2000 South Holly Street
Denver, CO 80222
Phone: 303-972-9112 FAX: 303-972-9114
Region 6 RLB

As Constructed	
No Revisions:	
Revised:	
Void:	

I-25/SANTA FE INTERCHANGE
TEMPORARY WALLS EXCAVATION
& BACKFILL DETAILS (1 OF 2)

Designer:	P. STEIN	Structure Numbers	
Detailer:	M. ARROYO		
Sheet Subset:	WALL	Subset Sheets:	W60 of X

Project No./Code	
IM 0254-394	
16311	
Sheet Number	242

R:\cdi 4:08:12 PM K:\08276\16311\Phase 2\Bridge\Drawings\16311WALL_PH2_TempWallExcav01.dgn
9/27/2010 CDOT-PDFDraftQuality_XM.pltcfg CDOT-PenTable.tbl

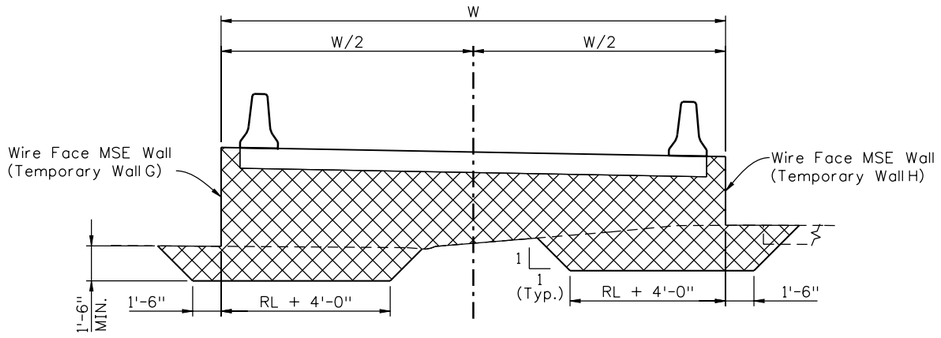

STRUCTURE BACKFILL

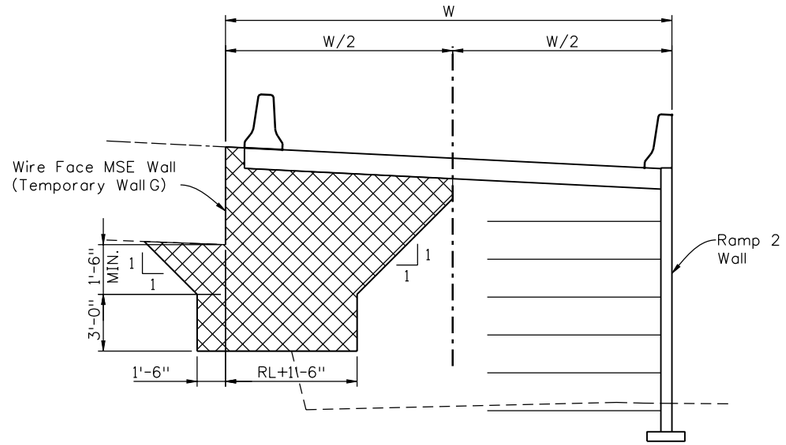

STRUCTURE BACKFILL

ABBREVIATIONS

DH = Design Height (ft.)
RL = Reinforcing Length (ft.)

LEGEND

Pay Limit for Structure (Class 1) Backfill

Pay Limit for Structure Excavation

▲ See Project Special Provision Section 207-Topsoil

NOTES

1. See WX for Mechanical Reinforcement of Soil. Temporary Walls G & H are to Temporary Walls A-D.

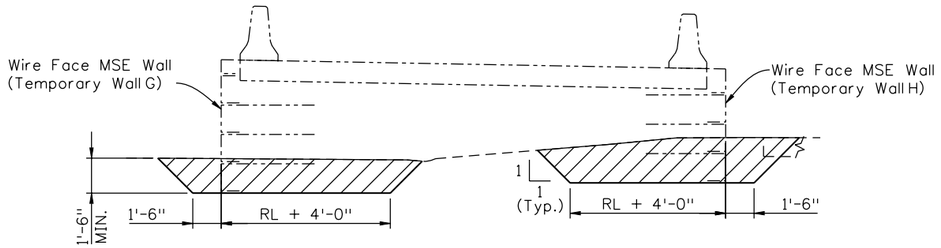

STRUCTURE EXCAVATION

TEMPORARY WALLS G & H
WALL G STA. 801+00 TO 803+96.94

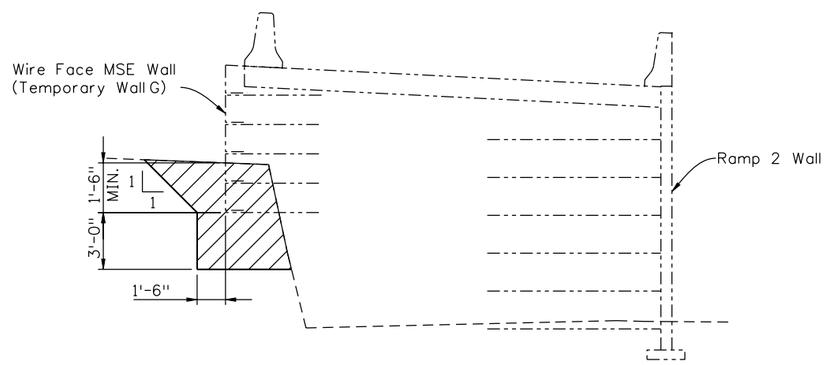

STRUCTURE EXCAVATION

TEMPORARY WALL G
STA. 803+96.94 TO 808+00

Revision Dates (Preliminary Stage Only)

Design				Detail				Quantities			
	INITIAL	DATE			INITIAL	DATE			INITIAL	DATE
Designed By	PRS	03/10		Detailed By	RAD	03/10		Quantities By		
Checked By				Checked By	PRS			Checked By		

R:\cdt 4:08:15 PM K:\08276\16311\Phase 2\Bridge\Drawings\16311WALL_PH2_TempWallExcav01.dgn
9/27/2010 CDOT-PDFDraftQuality_XM.pltcfg CDOT-PenTable.tbl

Print Date: 9/27/2010
File Name: 16311WALL_PH2_TempWallExcav01.dgn
Horiz. Scale: 1:1 Vert. Scale: As Noted
Unit Information Unit Leader Initials

FELSBURG HOLT & ULLEVIG 6300 South Syracuse Way Centennial, CO 80111 25 years of engineering paths to transportation solutions

Sheet Revisions		
Date:	Comments	Init.

Colorado Department of Transportation
DEPARTMENT OF TRANSPORTATION
2000 South Holly Street
Denver, CO 80222
Phone: 303-972-9112 FAX: 303-972-9114
Region 6 RLB

As Constructed
No Revisions:
Revised:
Void:

I-25/SANTA FE INTERCHANGE
TEMPORARY WALLS EXCAVATION & BACKFILL DETAILS (2 OF X)

Designer: P. STEIN
Detailer: M. ARROYO
Sheet Subset: WALL
Structure Numbers:
Subset Sheets: W61 of X

Project No./Code
IM 0254-394
16311
Sheet Number 243

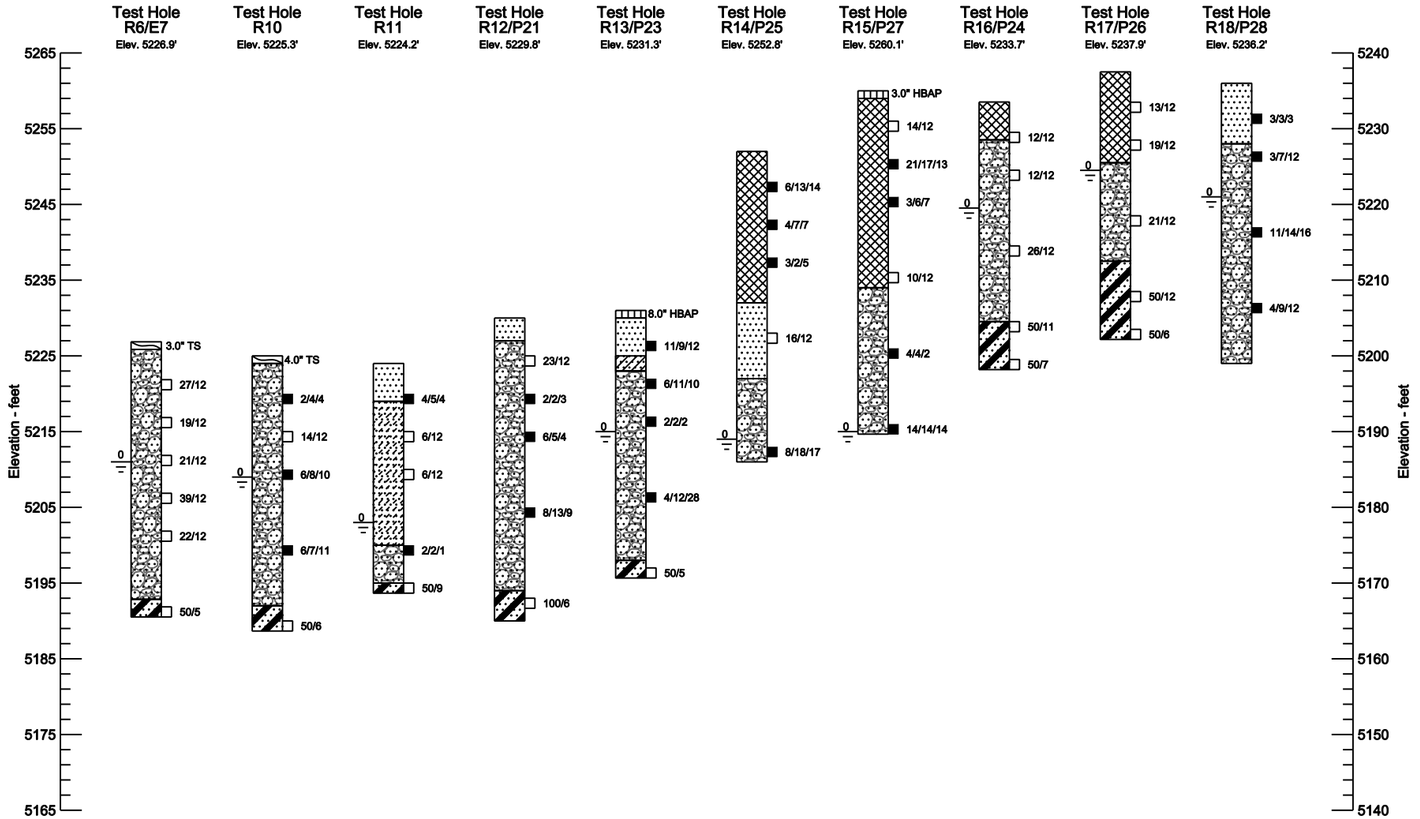

SUMMARY OF TEST RESULTS

Sample Number	Depth (feet)	Classification		Grading Analysis (AASHTO) Percent			Atterberg Limits			Water Content W %	Unconfined Compressive Strength (psf)
		Corps of Engrs. or Visual (Soil or Bedrock Types)	AASHTO	Gravel	Sand	Silt and Clay	L.L. L_W	P.L. P_W	P.I. I_W		
R6/E7	5	Gravelly Sand	A-1-b(0)	25	58	17	19	14	5	4.2	–
R6/E7	15	Gravelly Sand	A-1-b(0)	33	58	9	NV	–	NP	6.5	–
R6/E7	35	Sandstone/Siltstone	A-4(3)	–	–	54	35	26	9	18.3	9,740
R10	5	Clayey Sand	A-2-4(0)	17	53	30	25	18	7	10.1	–
R10	15	Gravelly Sand	A-1-b(0)	16	79	5	NV	–	NP	10.5	–
R10	35	Silty Sandstone	A-2-7(0)	–	–	16	45	31	14	21.8	10,380
R11	4	Silty Sand	A-4(0)	0	64	36	33	27	6	8.5	–
R11	14	Sandy Clay	A-6(9)	–	–	70	38	23	15	27.9	1,270
R11	29	Silty Sandstone	A-2-4(0)	–	–	32	34	28	6	18.9	8,870
R12/P21	5	Gravelly Sand	A-2-4(0)	17	69	14	NV	–	NP	3.5	–
R12/P21	10	Gravelly Sand	A-1-b(0)	11	83	6	NV	–	NP	3.4	–
R12/P21	25	Gravelly Sand	A-1-b(0)	14	79	7	NV	–	NP	13.0	–
R12/P21	39	Silty Sandstone	A-2-7(0)	–	–	30	46	31	15	20.3	20,700
R13/P23	9	Gravelly Sand	A-1-a(0)	39	57	4	NV	–	NP	3.1	–
R13/P23	24	Slightly Gravelly Sand	A-1-b(0)	9	84	7	NV	–	NP	13.9	–
R13/P23	34	Sandy Siltstone	A-6(6)	–	–	62	40	29	11	20.4	13,790

NV = Non-viscous NP = Non-plastic

SUMMARY OF TEST RESULTS

Sample Number	Depth (feet)	Classification		Grading Analysis (AASHTO) Percent			Atterberg Limits			Water Content W %	Unconfined Compressive Strength (psf)
		Corps of Engrs. or Visual (Soil or Bedrock Types)	AASHTO	Gravel	Sand	Silt and Clay	L.L. L_W	P.L. P_W	P.I. I_W		
R14/P25	9	Fill: Clayey Sand	A-3-4(0)	–	–	30	28	20	8	10.8	–
R14/P25	24	Silty Sand	A-2-4(0)	–	–	31	22	16	6	11.2	2,440
R14/P25	39	Gravelly Sand	A-1-b(0)	12	82	6	NV	–	NP	14.0	–
R15/P27	4	Fill: Sand and Clay	A-6(5)	–	–	52	37	22	15	13.9	7,700
R15/P27	9	Fill: Sand and Gravel	A-1-a(0)	51	45	4	NV	–	NP	7.0	–
R15/P27	24	Fill: Sand and Clay	A-6(2)	–	–	44	35	22	13	19.0	1,950
R15/P27	34	Gravelly Sand	A-1-b(0)	25	73	2	NV	–	NP	1.3	–
R16/P24	4	Fill: Clayey Sand	A-2-4(0)	–	–	25	26	18	8	4.6	–
R16/P24	9	Gravelly Sand	A-1-b(0)	19	71	10	NV	–	NP	3.4	–
R16/P24	19	Gravelly Sand	A-1-b(0)	17	76	7	NV	–	NP	11.0	–
R16/P24	29	Silty Sandstone	A-2-4(0)	–	–	26	28	24	4	12.9	2,000
R17/P26	9	Fill: Clayey Sand	A-2-4(0)	–	–	22	30	20	10	10.7	–
R17/P26	19	Gravelly Sand	A-1-b(0)	17	76	7	NV	–	NP	6.9	–
R17/P26	29	Claystone	A-6(12)	–	–	97	32	20	12	28.3	24,260
R17/P26	34	Sandy Siltstone	A-4(6)	–	–	82	38	33	5	23.7	–
R18/P28	4	Silty Sand	A-4(0)	0	61	39	23	18	5	11.3	–
R18/P28	9	Gravelly Sand	A-1-b(0)	21	72	7	NV	–	NP	3.0	–
R18/P28	19	Gravelly Sand	A-1-b(0)	26	67	7	NV	–	NP	8.3	–

NV = Non-viscous NP = Non-plastic

LEGEND:

- Topsoil (TS).
- Hot Bituminous Asphalt Pavement (HBAP).
- Fill: Clayey, silty, gravelly sand to sand and clay/silt, occasional deleterious material and debris, non-plastic to highly plastic, fine to coarse grained with gravels, very loose to very dense, slightly moist to moist, tan, light brown, dark brown.
- Sand: Silty to clayey, fine to coarse grained, occasional gravels, non-plastic to medium plastic, very loose to dense, slightly moist to wet, light brown, dark brown, tan, black, orange brown.
- Sand and Clay: Interlayered, very clayey or silty sand to very sandy clay, fine to coarse grained, occasional gravels, non-plastic to medium plastic, soft to very stiff or very loose to dense, slightly moist to wet, light brown, dark brown, orange brown, gray.
- Sand and Gravel: Occasionally silty, fine to coarse grained with gravels and cobbles, non-plastic to medium plastic, very loose to very dense, slightly moist to wet, tan, pink, brown, orange brown, black, occasionally iron stained.
- Sandstone and Siltstone/Claystone Bedrock: Interbedded, fine to coarse grained, non-plastic to highly plastic, medium hard to very hard, slightly moist to wet, brown, gray, blue gray, blue brown, green gray, blue gray, occasionally iron stained.
- Drive sample, 2-inch I.D. California liner sample
- Drive sample, 1-3/8 inch I.D. standard sample
- B Bounce
- 23/12 Drive sample blow count, indicates 23 blows of a 140-pound hammer falling 30 inches were required to drive the sampler 12 inches.
- 20/25/30 Drive sample blow count, indicates 20, 25, and 30 blows of a 140-pound hammer falling 30 inches were required to drive the sampler 18 inches.
- 0 Depth to water level and number of days after drilling that measurement was taken.

NOTES:

1) Test holes were drilled from 01/26/09 to 02/26/09 and from 06/04/09 to 06/19/09 with 7-inch diameter hollow stem or 4-inch diameter continuous flight power augers.
2) Locations of the test holes were surveyed by the Owner's representative after completion of the test hole drilling.
3) Elevations of the test holes were surveyed by the Owner's representative and the logs of the test holes are drawn to elevation.
4) The test hole locations and elevations should be considered accurate only to the degree implied by the method used.
5) The lines between materials shown on the test hole logs represent the approximate boundaries between material types and the transitions may be gradual.
6) Groundwater level readings shown on the logs were made at the time and under the conditions indicated. Fluctuations in the water level may occur with time.
7) Thicknesses of topsoil, HBAP and road base were generally drawn to 1 foot due to the test hole log scale. Actual thickness can vary.
8) The material descriptions on this legend are for general classification purposes only. See the full text of this report for descriptions of the site materials and related recommendations.
9) Location of test holes are shown in the "Subsurface Exploration and Geotechnical Recommendations for Phase1 (Stage 1.2-1.4) and Phase 2, Task Order No.17, CDOT Project No. 0252-394, Project Code No. 16311", Dated October 26, 2009.

Revision Dates (Preliminary Stage Only)

Design			Detail			Quantities		
	INITIAL	DATE		INITIAL	DATE		INITIAL	DATE
Designed By			Detailed By	RAD	12/08	Quantities By		
Checked By			Checked By			Checked By		

Print Date: 9/27/2010
File Name: 16311WALL_PH2_EngGeology01.dgn
Horiz. Scale: 1:40 Vert. Scale: As Noted
Unit Information Unit Leader Initials

FELSBURG HOLT & ULLEVIG 6300 South Syracuse Way Centennial, CO 80111 25 years of engineering paths to transportation solutions

Sheet Revisions		
Date:	Comments	Init.

Colorado Department of Transportation
DEPARTMENT OF TRANSPORTATION
2000 South Holly Street
Denver, CO 80222
Phone: 303-972-9112 FAX: 303-972-9114
Region 6 RLB

As Constructed
No Revisions:
Revised:
Void:

I-25/SANTA FE INTERCHANGE
BORING LOG INFORMATION

Designer: H.H.Chaing
Detailer: H.Siders
Sheet Subset: WALL
Structure Numbers
Subset Sheets: W62 of XX

Project No./Code
IM 0254-394
16311
Sheet Number 244

GROUND ENGINEERING CONSULTANTS

RLB

Ricdi 4:16:24 PM K:\08276\16311\Phase 2\Bridge\Drawings\16311WALL_PH2_EngGeology01.dgn
9/27/2010 CDOT-PDFDraftQuality_XM.pltcfg CDOT-PenTable.tbl

ROADWAY GENERAL NOTES

1. PAVING SHALL NOT BEGIN UNTIL THE SUBGRADE HAS BEEN APPROVED BY THE ENGINEER. THE PAVEMENT SUBGRADE SHALL BE PROOF ROLLED AND APPROVED PRIOR TO THE PLACEMENT OF ANY PAVEMENT. AREAS WHICH DEFORM UNDER HEAVY WHEEL LOADS AS DETERMINED BY THE ENGINEER SHALL BE DEEMED NOT STABLE AND SHALL BE REMOVED AND REPLACED AT THE CONTRACTOR'S EXPENSE TO ACHIEVE A STABLE SUBGRADE PRIOR TO PAVING. THE ENGINEER TO APPROVE THE TYPE AND WEIGHT OF THE VEHICLE TO BE USED FOR THE PROOF ROLLING. THE CONTRACTOR SHALL PROVIDE ALL EQUIPMENT AND LABOR NECESSARY FOR THE PROOF ROLLING. PROOF ROLLING WILL NOT BE PAID FOR SEPARATELY, BUT TO BE INCLUDED IN THE COST OF THE PAVEMENT.

2. ALL CURB AND GUTTER TYPE 2 (SECTION II-B) TO BE 'CATCH' UNLESS SHOWN OTHERWISE.

3. ALL PRECAST TYPE 7 CONCRETE BARRIERS TO BE PAID FOR AS ITEM 630 – GUARDRAIL TYPE 7 (TEMPORARY). ALL PRECAST TYPE 7 CONCRETE BARRIERS TO REMAIN ON THE PROJECT SITE AT THE END OF THE CONSTRUCTION AND TO BECOME THE PROPERTY OF CDOT, UNLESS SPECIFICALLY DESIGNATED BY THE ENGINEER TO BE REMOVED FROM THE PROJECT SITE BY THE CONTRACTOR.

4. ALL TEMPORARY IMPACT ATTENUATORS TO BE APPROVED BY THE ENGINEER AND TO BE PAID FOR AS ITEM 630 – IMPACT ATTENUATOR (TEMPORARY). ALL TEMPORARY IMPACT ATTENUATORS TO REMAIN ON THE PROJECT SITE AT THE END OF THE CONSTRUCTION AND TO BECOME THE PROPERTY OF CDOT, UNLESS SPECIFICALLY DESIGNATED BY THE ENGINEER TO BE REMOVED FROM THE PROJECT SITE BY THE CONTRACTOR.

5. ALL MODIFICATIONS TO THE TYPE 7 BARRIERS NECESSARY TO ACCOMMODATE THE BRIDGE PIERS, OVERHEAD SIGNS, LIGHTING, BRIDGE RAILS (INCLUDING TRANSITIONING TO THE SEPARATE BRIDGE RAILS AT THE I-25 BRIDGE OVER SANTA FE), IMPACT ATTENUATORS, TRANSITIONS TO OTHER BARRIERS, AND ALL OTHER NECESSARY MODIFICATIONS WILL NOT BE PAID FOR SEPARATELY, BUT TO BE INCLUDED IN THE COST OF CORRESPONDING TYPE 7 BARRIER.

6. GLARE SCREEN SHALL BE PLACED ON THE PRECAST TYPE 7 CONCRETE BARRIERS WHERE DESIGNATED ON THE PLANS OR AS DIRECTED BY THE ENGINEER. THE GLARE SCREEN WILL NOT BE PAID FOR SEPARATELY, BUT TO BE INCLUDED IN THE COST OF THE CORRESPONDING TYPE 7 BARRIERS.

7. ITEM 507 –CONCRETE SLOPE AND DITCH PAVING TO BE 6 INCHES THICK. FINAL LIMITS OF CONCRETE SLOPE AND DITCH PAVING TO BE DETERMINED DURING CONSTRUCTION AS DIRECTED BY THE ENGINEER.

Stan 12:55:52 PM K:\08276\16311\Phase 2\Design\Drawings\16311DES_PH2_RoadwayNotes.dgn
9/27/2010 CDOT-PDFDraftQuality_XM.pltcfg CDOT-PenTable.tbl

Print Date: 9/27/2010	Sheet Revisions			Colorado Department of Transportation	As Constructed
File Name: 16311DES_PH2_RoadwayNotes.dgn	Date:	Comments	Init.	2000 South Holly Street	No Revisions:
Horiz. Scale: 1:1 Vert. Scale: As Noted				Denver, CO 80222	Revised:
Unit Information Unit Leader Initials				Phone: 303-972-9112 FAX: 303-972-9114	Void:
FELSBURG HOLT & ULLEVIG 6300 South Syracuse Way Centennial, CO 80111				Region 6 RLB	

I-25/SANTA FE INTERCHANGE ROADWAY NOTES			Project No./Code
			IM 0254-394
Designer: SPG	Structure Numbers		16311
Detailer: SYS			
Sheet Subset: MISC	Subset Sheets: RN-1 of 1		Sheet Number 245

Know what's below. Call before you dig.

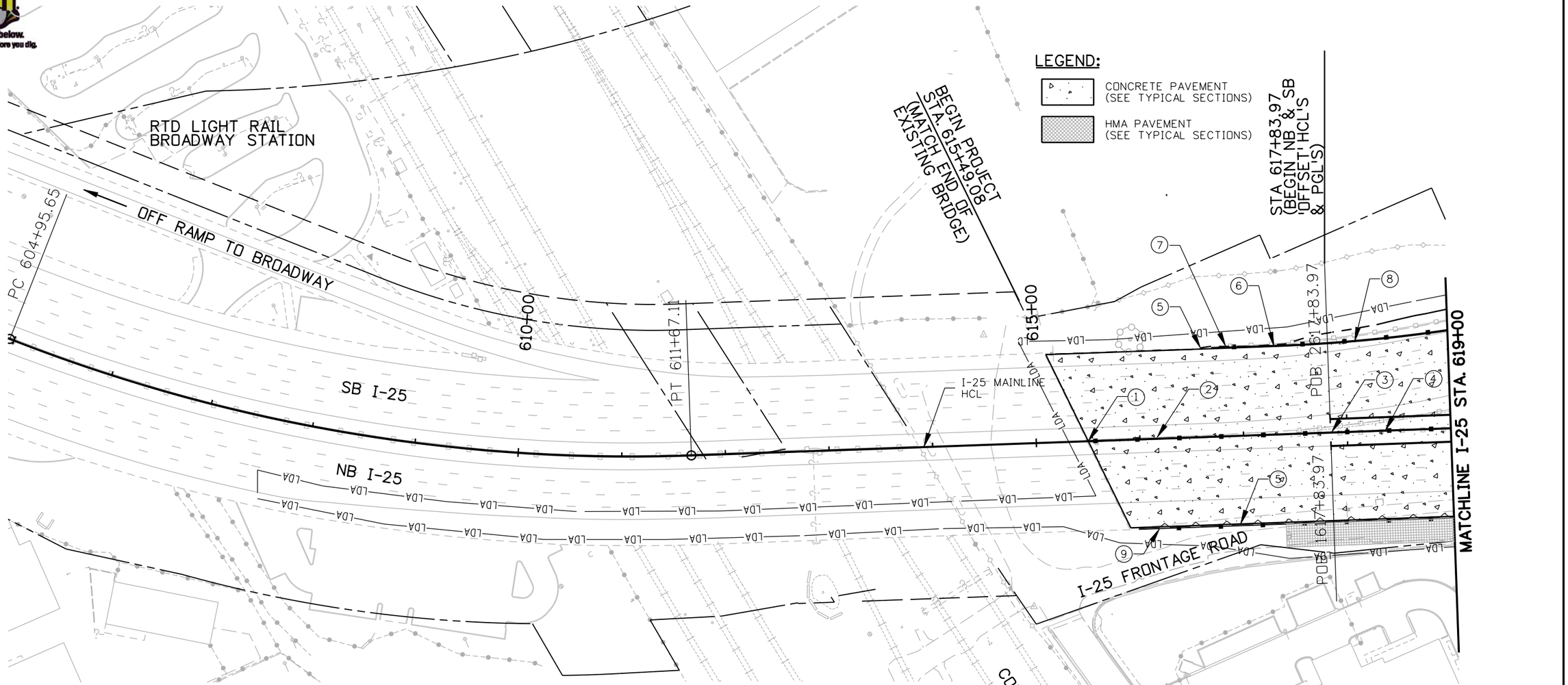

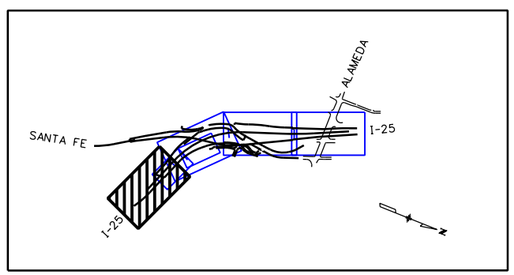

MAPKEY

CONSTRUCTION NOTES:

1. STA. 615+49.08 - BEGIN TYPE 7 BARRIER (MATCH EXISTING)
2. TYPE 7 BARRIER (STYLE CC). (CONCRETE GLARE SCREEN)
3. STA. 617+83.97 - BEGIN TYPE 7 BARRIER (STYLE CE).
4. TYPE 7 BARRIER (STYLE CE) (CONCRETE GLARE SCREEN).
5. EDGE OF CONCRETE PAVEMENT (SEE TYPICAL SECTIONS).
6. STA. 617+32.34 BEGIN RAMP 3 TAPER.
7. STA. 616+71.86 - TRANSITION FROM EXISTING BRIDGE RAIL TO TYPE 7 BARRIER
8. TYPE 7 BARRIER (STYLE CA)
9. TYPE 7 BARRIER (STYLE CD) ALONG BASE OF WALL (SEE WALL PLANS).

Print Date: 9/27/2010	Sheet Revisions	Colorado Department of Transportation	As Constructed
File Name: 16311DES_PH2_I-25Plan1.dgn	Date: / Comments / Init.	2000 South Holly Street, Denver, CO 80222	No Revisions:
Horiz. Scale: 1:100 Vert. Scale: As Noted		Phone: 303-972-9112 FAX: 303-972-9114	Revised:
Unit Information Unit Leader Initials		Region 6 RLB	Void:
FELSBURG HOLT & ULLEVIG 6300 South Syracuse Way Centennial, CO 80111			

I-25/SANTA FE INTERCHANGE I-25 ROADWAY PLAN			Project No./Code
Designer: SPG	Structure Numbers		IM 0254-394
Detailer: SYS			16311
Sheet Subset: ROADWAY	Subset Sheets: IPL-1 of 4		Sheet Number 246

Stan 12:55:59 PM K:\08276\16311\Phase 2\Design\Drawings\16311DES_PH2_I-25Plan1.dgn
9/27/2010 CDOT-PDFDraftQuality_XM.pltcfg CDOT-PenTable.tbl

Know what's below. Call before you dig.

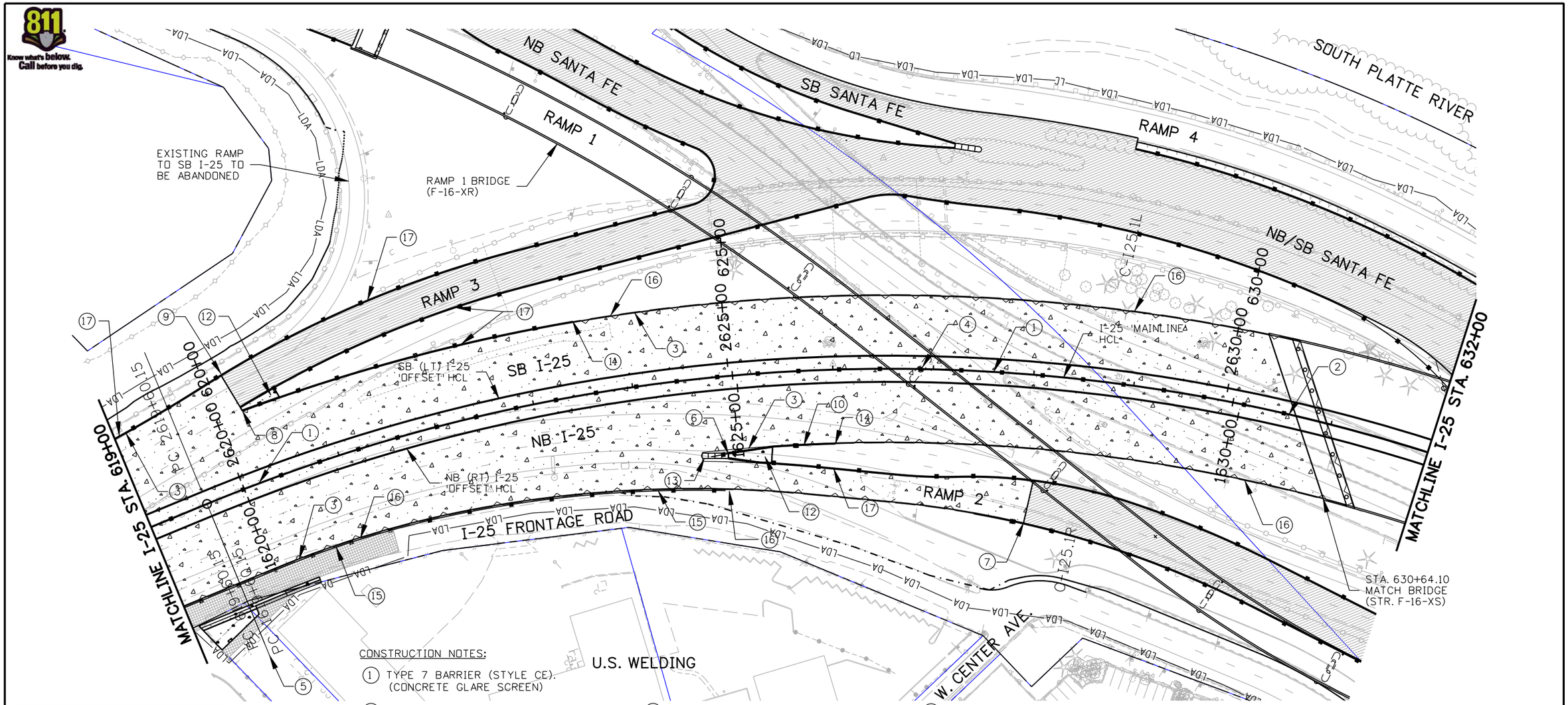

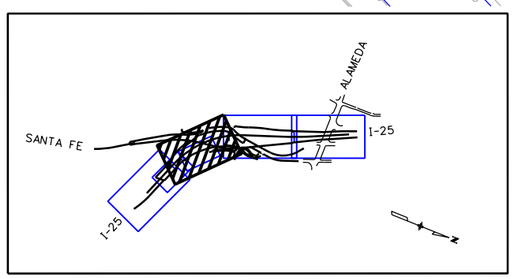

MAPKEY

CONSTRUCTION NOTES:

1. TYPE 7 BARRIER (STYLE CE). (CONCRETE GLARE SCREEN)
2. TRANSITION TYPE 7 BARRIER TO MATCH SEPARATE BRIDGE RAILS AT END OF BRIDGE (SEE I-25 BRIDGE PLANS)
3. EDGE OF CONCRETE PAVEMENT (SEE TYPICAL SECTIONS).
4. TRANSITION BARRIER AROUND PIER (SEE RAMP 1 BRDIGE PLANS)
5. STA. 619+60.15 - BEGIN RAMP 2 TAPER
6. STA. 624+88.70 - GORE NOSE - (PROVIDE OPENING IN BARRIER FOR DRAINAGE).
7. END CONCRETE PAVEMENT, BEGIN HMA PAVEMENT - (SEE RAMP 2)
8. STA. 620+25.33 - GORE NOSE
9. END CONCRETE PAVEMENT - BEGIN HMA PAVEMENT (SEE RAMP 3)
10. TYPE 7 BARRIER (STYLE CE).
11. STA. 623+52.40 - TRANSITION TYPE 7 BARRIER TO MATCH BRIDGE RAIL.
12. CONCRETE SLOPE AND DITCH PAVING.
13. IMPACT ATTENUATOR
14. STA. 626+00.22 - TRANSITION TYPE 7 BARRIER TO MATCH BRIDGE RAIL.
15. TYPE 7 BARRIER (STYLE CD) ALONG BASE OF WALL (SEE WALL PLANS).
16. WALL WITH BRIDGE RAIL (SEE WALL PLANS)
17. TYPE 7 BARRIER (STYLE CA).

LEGEND:

- CONCRETE PAVEMENT (SEE TYPICAL SECTIONS)
- HMA PAVEMENT (SEE TYPICAL SECTIONS)

0' 50' 100' 200'

Print Date: 9/27/2010	Sheet Revisions		
File Name: 16311DES_PH2_I-25Plan2.dgn	Date:	Comments	Init.
Horiz. Scale: 1:100 Vert. Scale: As Noted			
Unit Information Unit Leader Initials			
FELSBURG HOLT & ULLEVIG 6300 South Syracuse Way Centennial, CO 80111			

Colorado Department of Transportation
2000 South Holly Street
Denver, CO 80222
Phone: 303-972-9112 FAX: 303-972-9114
Region 6 RLB

As Constructed
No Revisions:
Revised:
Void:

I-25/SANTA FE INTERCHANGE
I-25 ROADWAY PLAN

Designer: SPG
Detailer: SYS
Sheet Subset: ROADWAY
Structure Numbers:
Subset Sheets: IPL-2 of 4

Project No./Code
IM 0254-394
16311
Sheet Number 247

Stan 12:56:08 PM K:\08276\16311\Phase 2\Design\Drawings\16311DES_PH2_I-25Plan2.dgn
9/27/2010 CDOT-PDFDraftQuality_XM.pltcfg CDOT-PenTable.tbl

Know what's below. Call before you dig.

CONSTRUCTION NOTES:

1. TRANSITION TYPE 7 BARRIER TO MATCH SEPARATE BRIDGE RAILS AT END OF BRIDGE (SEE I-25 BRIDGE PLANS)
2. TYPE 7 BARRIER (STYLE CE). (CONCRETE GLARE SCREEN)
3. STA. 641+55.10 - BEGIN TYPE 7 BARRIER (STYLE CC).
4. TYPE 7 BARRIER (STYLE CC) (CONCRETE GLARE SCREEN).
5. STA. 644+75.00 - MATCH EXISTING BARRIER
6. EDGE OF CONCRETE PAVEMENT (SEE TYPICAL SECTIONS)
7. END CONCRETE PAVEMENT BEGIN HMA PAVEMENT (SEE RAMP 4)
8. STA. 638+26.28 - TYPE 3H TRANSITION
9. TYPE 3 GUARDRAIL
10. STA. 640+26.11 - TYPE 3D END ANCHORAGE
11. STA. 641+42.03 - TRANSITION TYPE 7 BARRIER TO MATCH BRIDGE RAIL.
12. TYPE 7 BARRIER (STYLE CA) (SEE RAMP 4)
13. CONCRETE SLOPE AND DITCH PAVING
14. WALL WITH BRIDGE RAIL (SEE WALL PLANS)
15. TYPE 3G TRANSITION (SEE RAMP 1)
16. GUARDRAIL TYPE 3 (SEE RAMP 1)
17. TYPE 7 BARRIER (STYLE CE)
18. PROVIDE OPENING IN BARRIER FOR DRAINAGE.

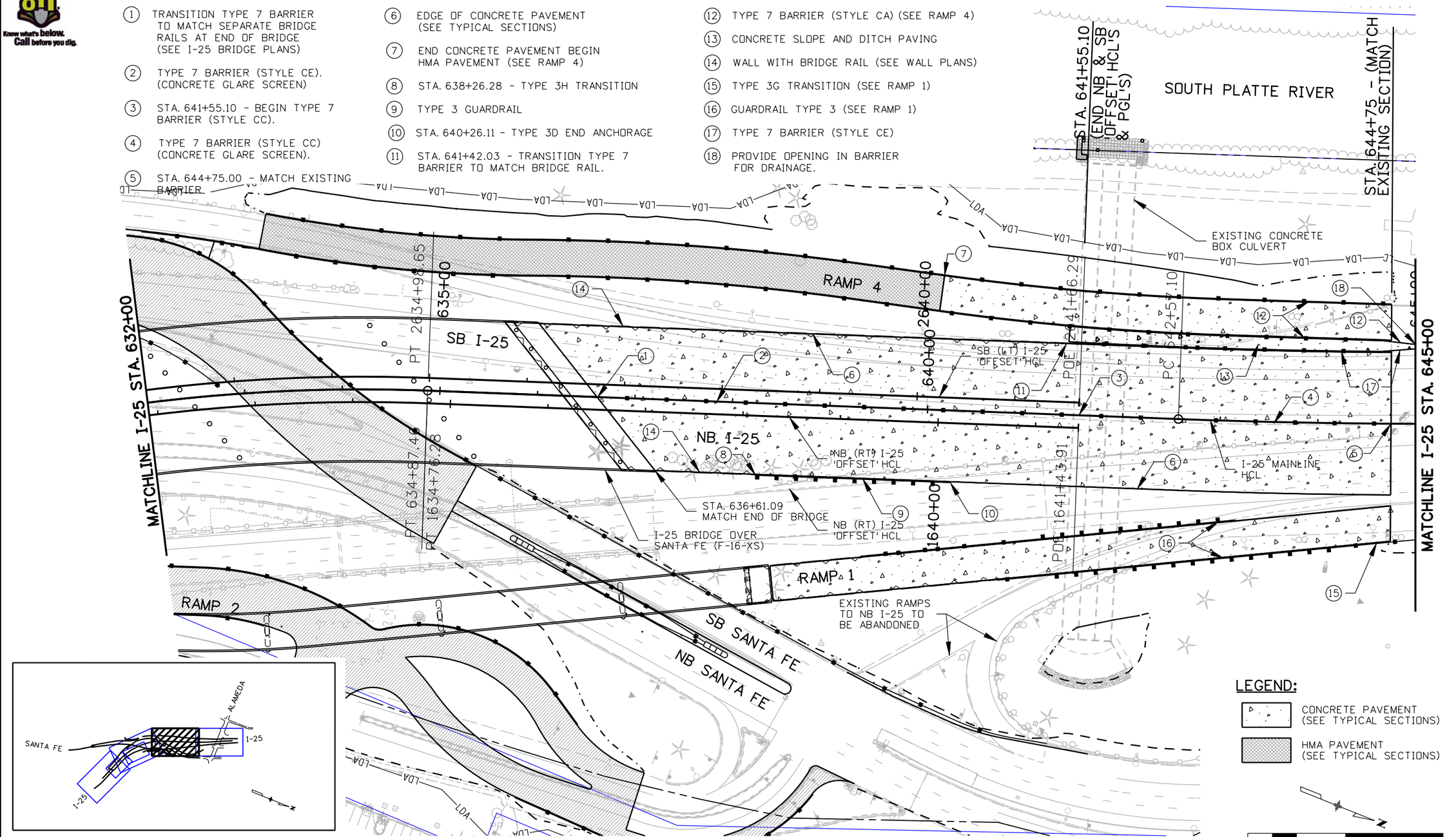

MAPKEY

LEGEND:

- CONCRETE PAVEMENT (SEE TYPICAL SECTIONS)
- HMA PAVEMENT (SEE TYPICAL SECTIONS)

0' 50' 100' 200'

Print Date: 9/27/2010	Sheet Revisions	Colorado Department of Transportation	As Constructed
File Name: 16311DES_PH2_I-25Plan3.dgn	Date: / Comments / Init.	2000 South Holly Street, Denver, CO 80222	No Revisions:
Horiz. Scale: 1:100 Vert. Scale: As Noted		Phone: 303-972-9112 FAX: 303-972-9114	Revised:
Unit Information Unit Leader Initials		Region 6 RLB	Void:
FELSBURG HOLT & ULLEVIG 6300 South Syracuse Way Centennial, CO 80111			

I-25/SANTA FE INTERCHANGE
I-25 ROADWAY PLAN

Designer: SPG	Structure Numbers		Project No./Code: IM 0254-394
Detailer: SYS			16311
Sheet Subset: ROADWAY	Subset Sheets: IPL-3 of 4		Sheet Number 248

Stan 12:56:18 PM K:\08276\16311\Phase 2\Design\Drawings\16311DES_PH2_I-25Plan3.dgn
9/27/2010 CDOT-PDFDraftQuality_XM.pltcfg CDOT-PenTable.tbl

811 Know what's below. Call before you dig.

SOUTH PLATTE RIVER

LEGEND:

CONCRETE PAVEMENT (SEE TYPICAL SECTIONS)

HMA PAVEMENT (SEE TYPICAL SECTIONS)

MATCHLINE I-25 STA. 645+00

SB I-25

NB I-25

PT 648+94.88

650+00

ALAMEDA AVE.

655+00

PC 655+37.59

I-25 MAINLINE HCL

ALAMEDA BRIDGE OVER I-25 (ALAMEDA AVE./I-25 PROJECT) (F-16-XW)

SB SANTA FE

SB KALAMATH

W. BYERS AVE.

LDA

0' 50' 100' 200'

MAPKEY

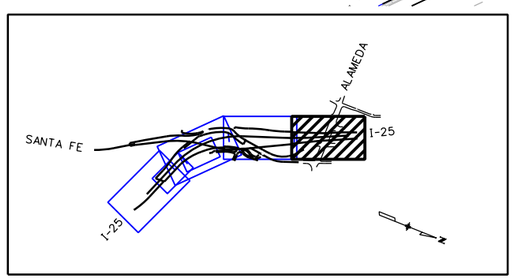

CONSTRUCTION NOTES:

1. IMPACT ATTENUATOR (PROVIDE OPENING IN BARRIER FOR DRAINAGE)
2. TYPE 7 BARRIER (STYLE CA)
3. STA. 645+57.17 (+/-) - TRANSITION TYPE 7 BARRIER TO MATCH EXISTING BARRIER.

Print Date: 9/27/2010	Sheet Revisions		
File Name: 16311DES_PH2_I-25Plan4.dgn	Date:	Comments	Init.
Horiz. Scale: 1:100 Vert. Scale: As Noted			
Unit Information Unit Leader Initials			
FELSBURG HOLT & ULLEVIG 6300 South Syracuse Way Centennial, CO 80111			

Colorado Department of Transportation
2000 South Holly Street
Denver, CO 80222
Phone: 303-972-9112 FAX: 303-972-9114
Region 6 RLB

As Constructed
No Revisions:
Revised:
Void:

I-25/SANTA FE INTERCHANGE
I-25 ROADWAY PLAN

Designer:	SPG	Structure Numbers	
Detailer:	SYS		
Sheet Subset:	ROADWAY	Subset Sheets: IPL-4 of 4	

Project No./Code
IM 0254-394
16311
Sheet Number 249

Stan 12:56:25 PM K:\08276\16311\Phase 2\Design\Drawings\16311DES_PH2_I-25Plan4.dgn
9/27/2010 CDOT-PDFDraftQuality_XM.pltcfg CDOT-PenTable.tbl

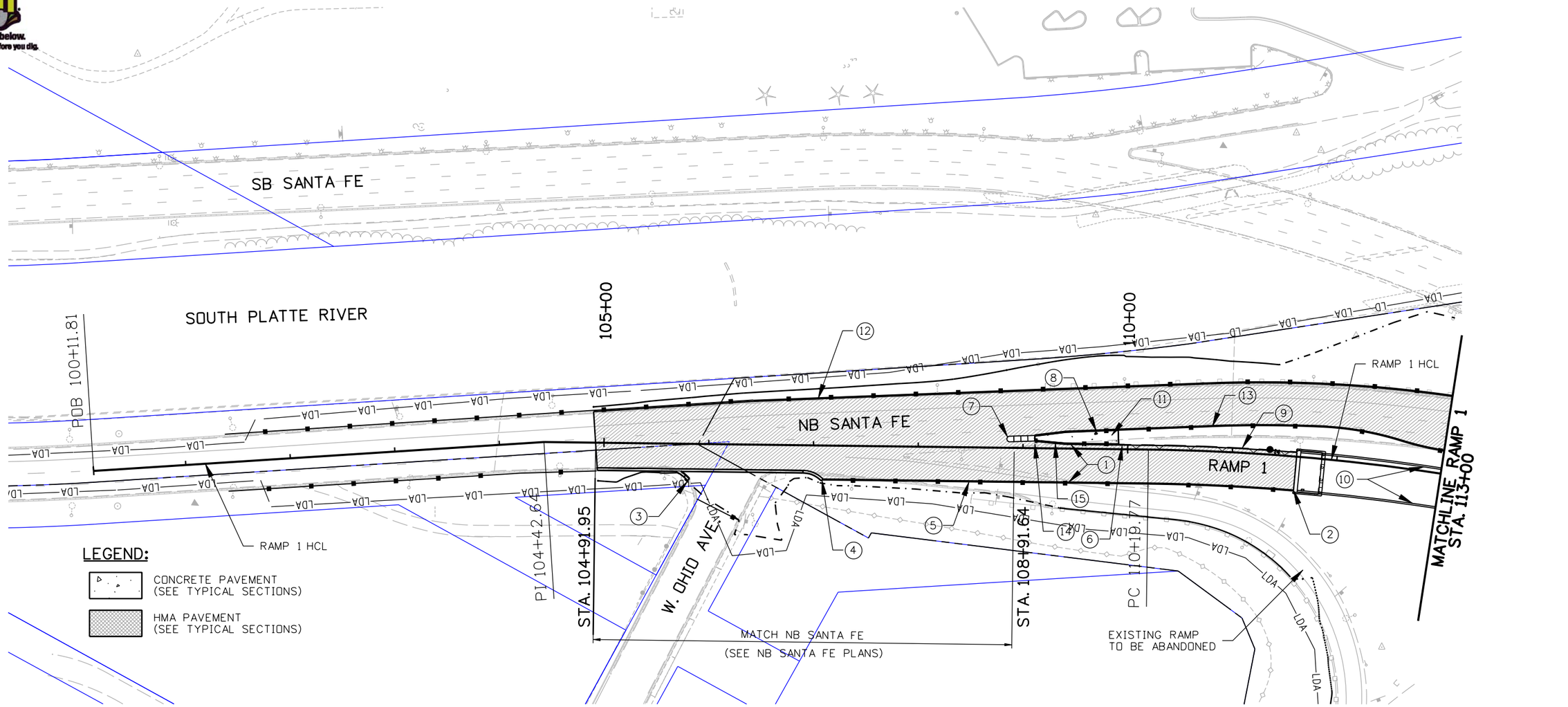

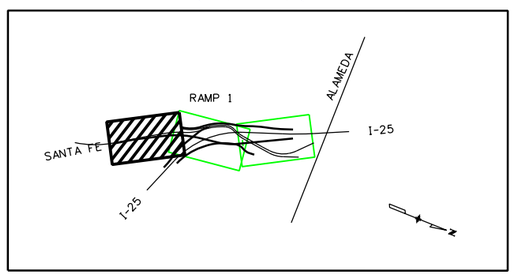

MAPKEY

CONSTRUCTION NOTES:

1. EDGE OF HMA (SEE TYPICAL SECTIONS).
2. STA. 111+61.45 - MATCH END OF BRIDGE (STR. F-16-XR) - END TYPE 7 PRECAST BARRIER
3. CONSTRUCT CURB AND GUTTER 'CONFLUENCE' CURBING TO MERGE GUTTER FLOWS FROM THE SOUTH SIDE OF OHIO AND THE EAST SIDE OF SANTA FE.
4. STA. 107+08.56 - BEGIN TYPE 7 PRECAST BARRIER
5. TYPE 7 PRECAST BARRIER.
6. STA. 109+91.34 TRANSITION TYPE 7 BARRIER TO MATCH BRIDGE RAIL.
7. IMPACT ATTENUATOR
8. TYPE 7 BARRIER (STYLE CA)
9. WALL WITH BRIDGE RAIL (SEE WALL PLANS)
10. BRIDGE RAIL (SEE BRIDGE PLANS)
11. CONCRETE SLOPE AND DITCH PAVING
12. TYPE 7 PRECAST BARRIER (SEE SANTA FE PLANS)
13. TYPE 7 BARRIER (STYLE CA) (SEE SANTA FE PLANS)
14. STA. 109+11.23 GORE NOSE (PROVIDE OPENING IN BARRIER FOR DRAINAGE)
15. TYPE 7 BARRIER (STYLE CE)

0' 50' 100' 200'

Print Date: 9/27/2010	Sheet Revisions			Colorado Department of Transportation	As Constructed	I-25/SANTA FE INTERCHANGE
File Name: 16311DES_PH2_Ramp1Plan1.dgn	Date:	Comments	Init.	2000 South Holly Street	No Revisions:	RAMP 1 PLAN
Horiz. Scale: 1:100 Vert. Scale: As Noted				Denver, CO 80222	Revised:	Designer: SPG Structure Numbers
Unit Information Unit Leader Initials				Phone: 303-972-9112 FAX: 303-972-9114	Void:	Detailer: SYS
FELSBURG HOLT & ULLEVIG 6300 South Syracuse Way Centennial, CO 80111				Region 6 RLB		Sheet Subset: ROADWAY Subset Sheets: R1PL-1 of 3

Project No./Code
IM 0254-394
16311
Sheet Number 250

Stan 12:56:34 PM K:\08276\16311\Phase 2\Design\Drawings\16311DES_PH2_Ramp1Plan1.dgn
9/27/2010 CDOT-PDFDraftQuality_XM.pltcfg CDOT-PenTable.tbl

Know what's below. Call before you dig.

SOUTH PLATTE RIVER

RAMP 4

NB / SB SANTA FE

115+00

NB SANTA FE

RAMP 1 HCL

RAMP 1

MATCHLINE RAMP 1 STA. 113+00

RAMP 3

SB I-25

NB I-25

PT 117+34.33

RAMP 2

120+00

PC 121+06.90

I-25 BRIDGE (F-16-XS)

PT 124+93.64

MATCHLINE RAMP 1 STA. 126+00

RAMP 1 BRIDGE (F-16-XR)

I-25 FRONTAGE ROAD

W. CENTER AVE.

HOME DEPOT PARKING LOT

LEGEND:

CONCRETE PAVEMENT (SEE TYPICAL SECTIONS)

HMA PAVEMENT (SEE TYPICAL SECTIONS)

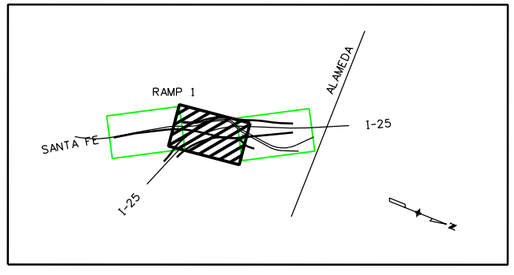

MAPKEY

CONSTRUCTION NOTES:

(1) BRIDGE RAIL (SEE BRIDGE PLANS).

0' 50' 100' 200'

Stan 12:56:40 PM K:\08276\16311\Phase 2\Design\Drawings\16311DES_PH2_Ramp1Plan2.dgn
9/27/2010 CDOT-PDFDraftQuality_XM.pltcfg CDOT-PenTable.tbl

Print Date: 9/27/2010
File Name: 16311DES_PH2_Ramp1Plan2.dgn
Horiz. Scale: 1:100 Vert. Scale: As Noted
Unit Information Unit Leader Initials

FELSBURG HOLT & ULLEVIG 6300 South Syracuse Way Centennial, CO 80111

Sheet Revisions		
Date:	Comments	Init.

Colorado Department of Transportation
DEPARTMENT OF TRANSPORTATION
2000 South Holly Street
Denver, CO 80222
Phone: 303-972-9112 FAX: 303-972-9114
Region 6 RLB

As Constructed
No Revisions:
Revised:
Void:

I-25/SANTA FE INTERCHANGE
RAMP 1 PLAN

Designer: SPG
Detailer: SYS
Sheet Subset: ROADWAY
Structure Numbers:
Subset Sheets: R1PL-2 of 3

Project No./Code
IM 0254-394
16311
Sheet Number 251

Know what's below. Call before you dig.

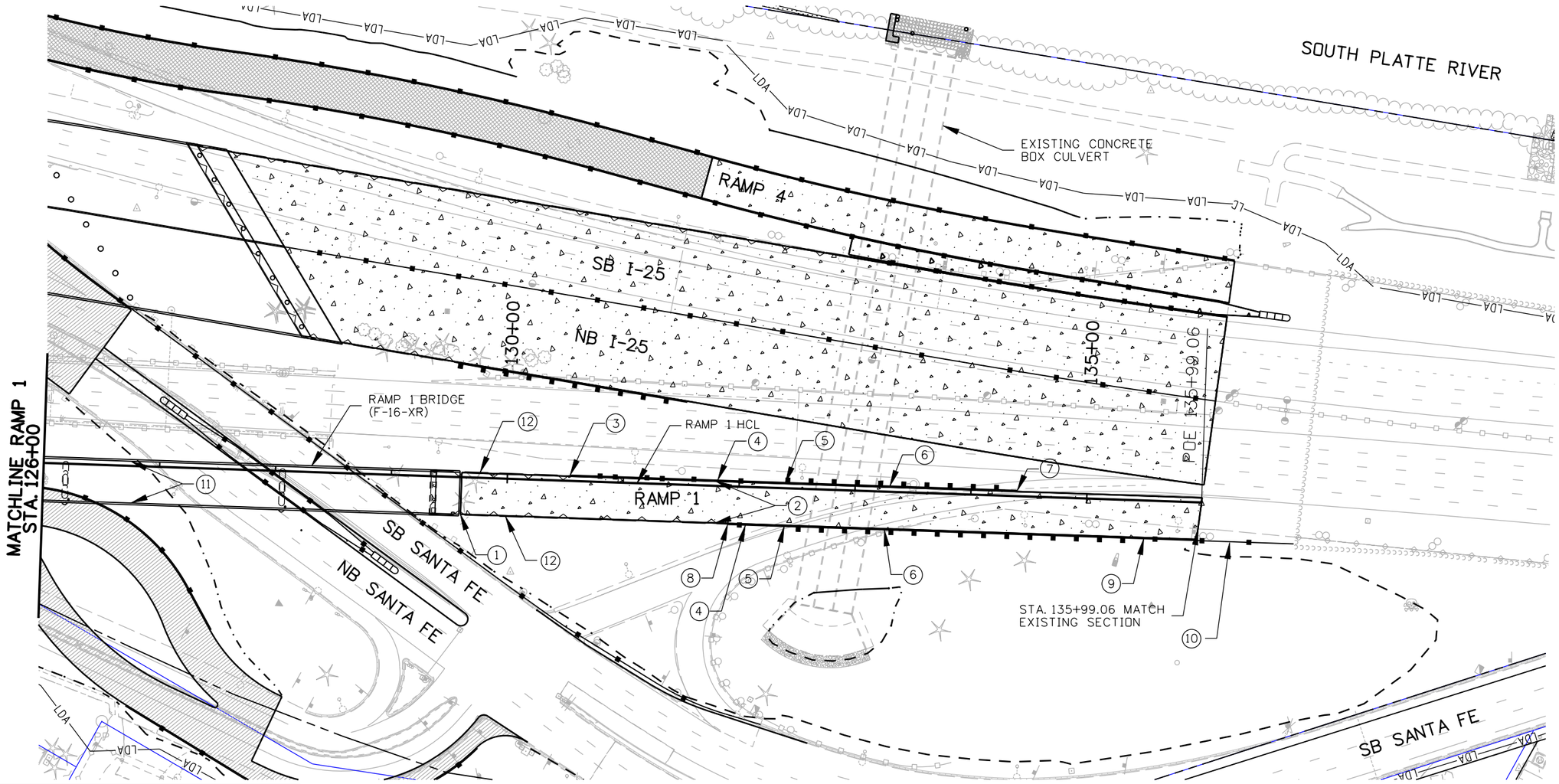

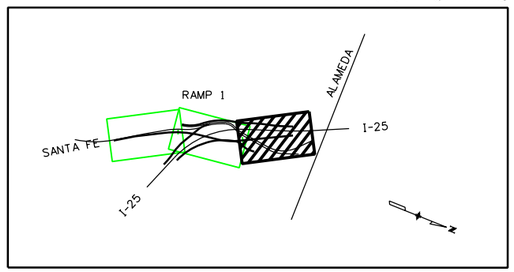

MAPKEY

LEGEND:

- CONCRETE PAVEMENT (SEE TYPICAL SECTIONS)
- HMA PAVEMENT (SEE TYPICAL SECTIONS)

CONSTRUCTION NOTES:

1. STA. 129+60.61- MATCH END OF BRIDGE
2. EDGE OF CONCRETE PAVEMENT (SEE TYPICAL SECTIONS)
3. STA. 130+54.11 - TRANSITION TYPE 7 BARRIER TO MATCH BRIDGE RAIL
4. TYPE 7 BARRIER (STYLE CA)
5. STA. 132+40.00 - TYPE 3H TRANSITION
6. TYPE 3 GUARDRAIL
7. STA. 134+40.00 - TYPE 3D END ANCHORAGE
8. STA. 131+91.17 - TRANSITION TYPE 7 BARRIER TO MATCH BRIDGE RAIL
9. STA. 135+50.30 - TYPE 3G TRANSITION
10. TYPE 7 BARRIER (SEE I-25 PLANS)
11. BRIDGE RAIL (SEE BRIDGE PLANS)
12. WALL WITH BRIDGE RAIL (SEE WALL PLANS)

0' 50' 100' 200'

Print Date: 9/27/2010
File Name: 16311DES_PH2_Ramp1Plan3.dgn
Horiz. Scale: 1:100 Vert. Scale: As Noted
Unit Information Unit Leader Initials

FELSBURG HOLT & ULLEVIG 6300 South Syracuse Way Centennial, CO 80111

Sheet Revisions		
Date:	Comments	Init.

Colorado Department of Transportation
DEPARTMENT OF TRANSPORTATION
2000 South Holly Street
Denver, CO 80222
Phone: 303-972-9112 FAX: 303-972-9114
Region 6 RLB

As Constructed
No Revisions:
Revised:
Void:

I-25/SANTA FE INTERCHANGE
RAMP 1 PLAN

Designer: SPG
Detailer: SYS
Sheet Subset: ROADWAY
Structure Numbers:
Subset Sheets: R1PL-3 of 3

Project No./Code
IM 0254-394
16311
Sheet Number 252

Stan 12:56:47 PM K:\08276\16311\Phase 2\Design\Drawings\16311DES_PH2_Ramp1Plan3.dgn
9/27/2010 CDOT-PDFDraftQuality_XM.pltcfg CDOT-PenTable.tbl

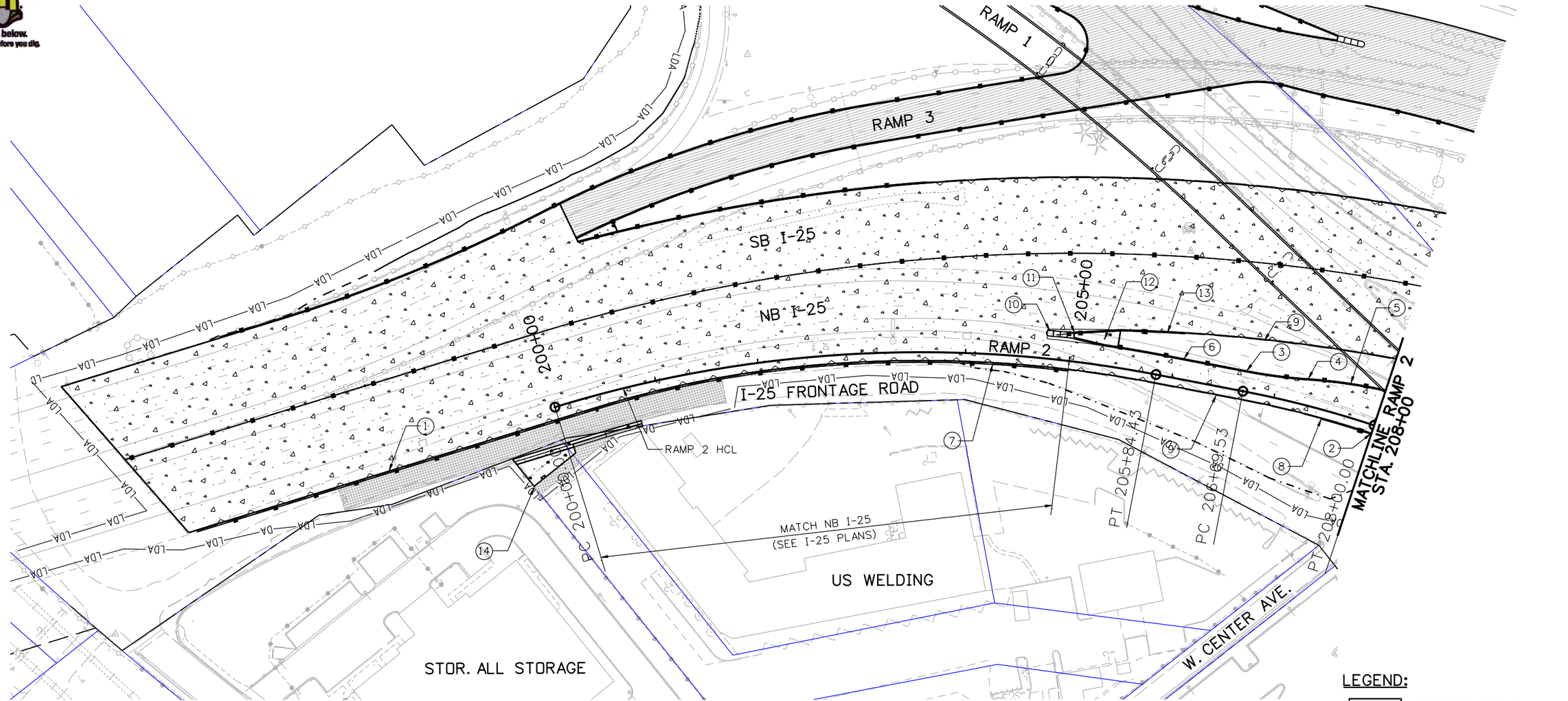

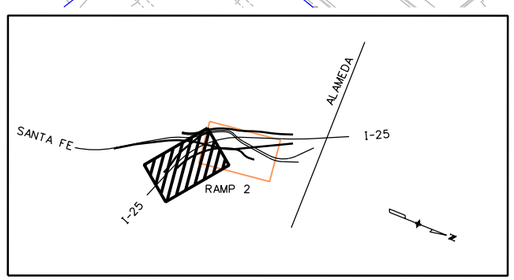

MAPKEY

CONSTRUCTION NOTES:

1. EDGE OF CONCRETE PAVEMENT (SEE TYPICAL SECTIONS).
2. STA. 208-00.00 END CONCRETE PAVEMENT, BEGIN HMA PAVEMENT
3. STA. 206+69.53 BEGIN RAMP 2 TAPER (SEE TYPICAL SECTIONS)
4. RADIUS AT EDGE OF PAVEMENT = 496'
5. RADIUS AT EDGE OF PAVEMENT = 504'
6. TYPE 7 BARRIER (STYLE CA) (SEE I-25 PLANS)
7. TYPE 7 BARRIER (STYLE CD) ALONG BASE OF WALL (SEE WALL PLANS)
8. STA. 207+50.95 - END OF WALL, (BEGIN PRECAST BARRIER)
9. WALL WITH BRIDGE RAIL (SEE WALL PLANS)
10. IMPACT ATTENUATOR (SEE I-25 PLANS)
11. STA. 205+01.83 GORE NOSE
12. CONCRETE SLOPE AND DITCH PAVING (SEE I-25 PLANS)
13. TYPE 7 BARRIER (STYLE CE) (SEE I-25 PLANS)
14. SEE I-25 FRONTAGE ROAD PLANS

LEGEND:

- CONCRETE PAVEMENT (SEE TYPICAL SECTIONS)
- HMA PAVEMENT (SEE TYPICAL SECTIONS)

0' 50' 100' 200'

Print Date: 9/27/2010	Sheet Revisions	Colorado Department of Transportation	As Constructed	I-25/SANTA FE INTERCHANGE	Project No./Code
File Name: 16311DES_PH2_Ramp2Plan1.dgn	Date: / Comments / Init.	2000 South Holly Street, Denver, CO 80222, Phone: 303-972-9112 FAX: 303-972-9114	No Revisions:	RAMP 2 PLAN	IM 0254-394
Horiz. Scale: 1:100 Vert. Scale: As Noted		Region 6 RLB	Revised:	Designer: SPG / Structure Numbers	16311
Unit Information Unit Leader Initials			Void:	Detailer: SYS	
FELSBURG HOLT & ULLEVIG 6300 South Syracuse Way Centennial, CO 80111				Sheet Subset: ROADWAY / Subset Sheets: R2PL-1 of 2	Sheet Number 253

Stan 12:56:57 PM K:\08276\16311\Phase 2\Design\Drawings\16311DES_PH2_Ramp2Plan1.dgn
9/27/2010 CDOT-PDFDraftQuality_XM.pltcfg CDOT-PenTable.tbl

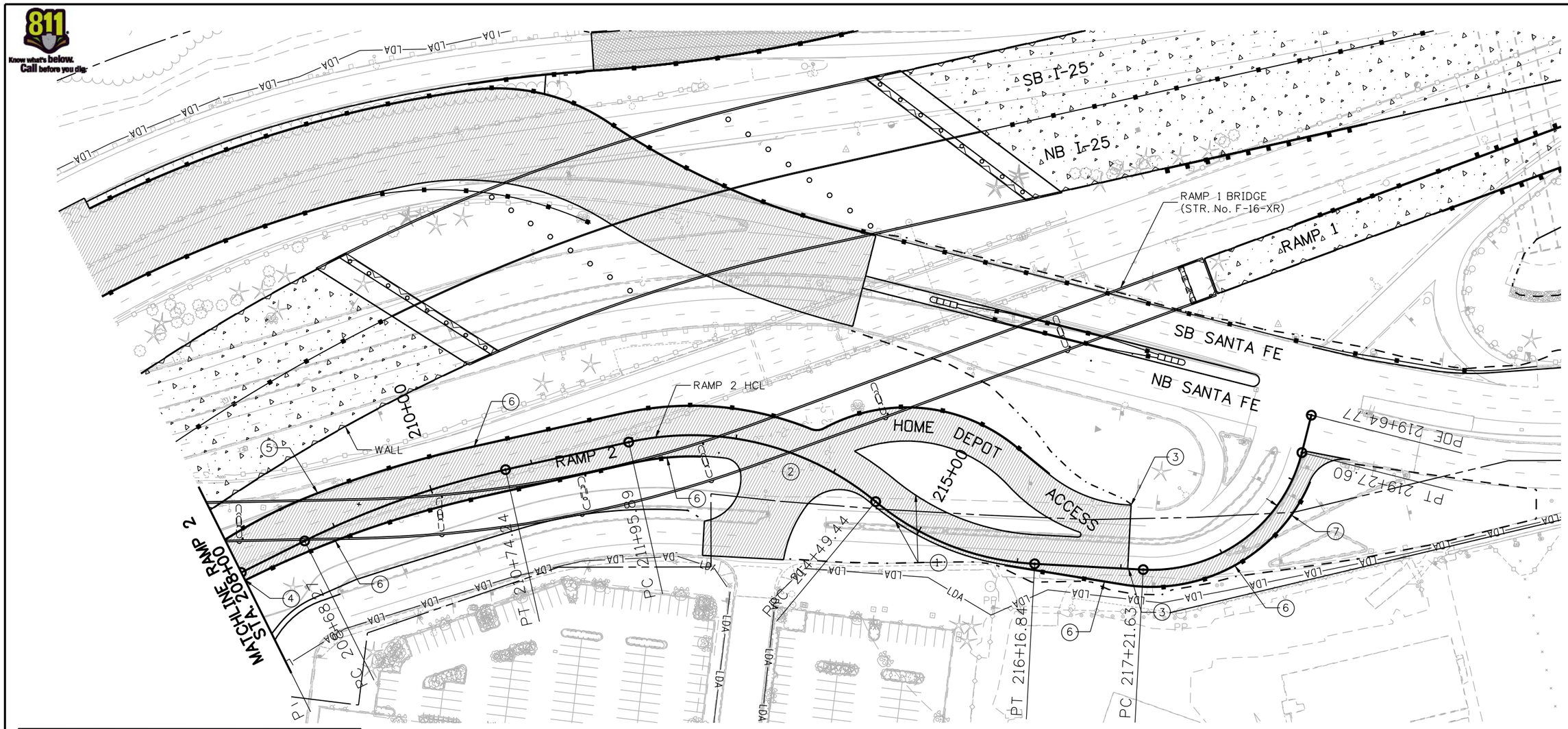

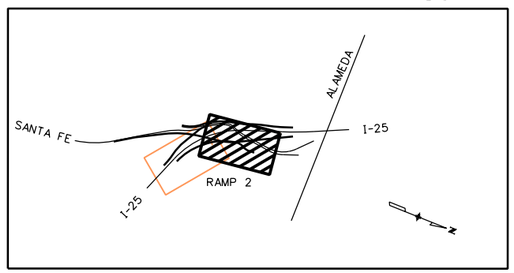

MAPKEY

LEGEND:

- CONCRETE PAVEMENT (SEE TYPICAL SECTIONS)
- HMA PAVEMENT (SEE TYPICAL SECTIONS)

CONSTRUCTION NOTES:

1. EDGE OF HMA PAVEMENT (SEE TYPICAL SECTIONS).
2. INTERSECTION WITH HOME DEPOT ACCESS ROAD (SEE HOME DEPOT PLANS).
3. STA. 217+06.69 - MATCH EXISTING ROADWAY SECTION
4. STA. 208+00 - BEGIN HMA PAVEMENT
5. STA. 208+98.67 - END TYPE 7 (STYLE CA), BEGIN PRECAST TYPE 7 CONCRETE BARRIER, END RAMP 2 TAPER (SEE TYPICAL SECTIONS)
6. PRECAST TYPE 7 CONCRETE BARRIER
7. REMOVE EXISTING CURB AND GUTTER AS NECESSARY - ADD HMA RIGHT TURN LANE (SEE TYPICAL SECTIONS)

0' 50' 100' 200'

Print Date: 9/27/2010	Sheet Revisions	Colorado Department of Transportation	As Constructed	I-25/SANTA FE INTERCHANGE	Project No./Code
File Name: 16311DES_PH2_Ramp2Plan2.dgn	Date: / Comments / Init.	2000 South Holly Street, Denver, CO 80222, Phone: 303-972-9112 FAX: 303-972-9114	No Revisions:	RAMP 2 PLAN	IM 0254-394
Horiz. Scale: 1:100 Vert. Scale: As Noted			Revised:	Designer: SPG / Structure Numbers	16311
Unit Information Unit Leader Initials		Region 6 RLB	Void:	Detailer: SYS	
FELSBURG HOLT & ULLEVIG 6300 South Syracuse Way Centennial, CO 80111				Sheet Subset: ROADWAY / Subset Sheets: R2PL-2 of 2	Sheet Number 254

Stan 12:57:04 PM K:\08276\16311\Phase 2\Design\Drawings\16311DES_PH2_Ramp2Plan2.dgn
9/27/2010 CDOT-PDFDraftQuality_XM.pltcfg CDOT-PenTable.tbl

Know what's below. Call before you dig.

CONSTRUCTION NOTES:

1. EDGE OF CONCRETE PAVEMENT (SEE TYPICAL SECTIONS).
2. STA. 303+02.72- END CONCRETE PAVEMENT, BEGIN HMA PAVEMENT. (GORE NOSE)
3. EDGE OF HMA PAVEMENT (SEE TYPICAL SECTIONS).
4. INTERSECTION WITH SANTA FE (SEE SANTA FE PLANS AND INTERSECTION PLAN)
5. STA.300+07.34 BEGIN RAMP 3 TAPER
6. TRANSITION FROM EXISTING BRIDGE RAIL TO TYPE 7 BARRIER (SEE I-25 PLANS)
7. TYPE 7 BARRIER (STYLE CA) (SEE I-25 PLANS)
8. STA. 306+09.95 - END TYPE 7 BARRIER (STYLE CA) BEGIN TYPE 7 PRECAST BARRIER
9. PRECAST TYPE 7 CONCRETE BARRIER
10. PRECAST TYPE 7 CONCRETE BARRIER (SEE SANTA FE PLANS)
11. CONCRETE SLOPE AND DITCH PAVING (SEE I-25 PLANS)

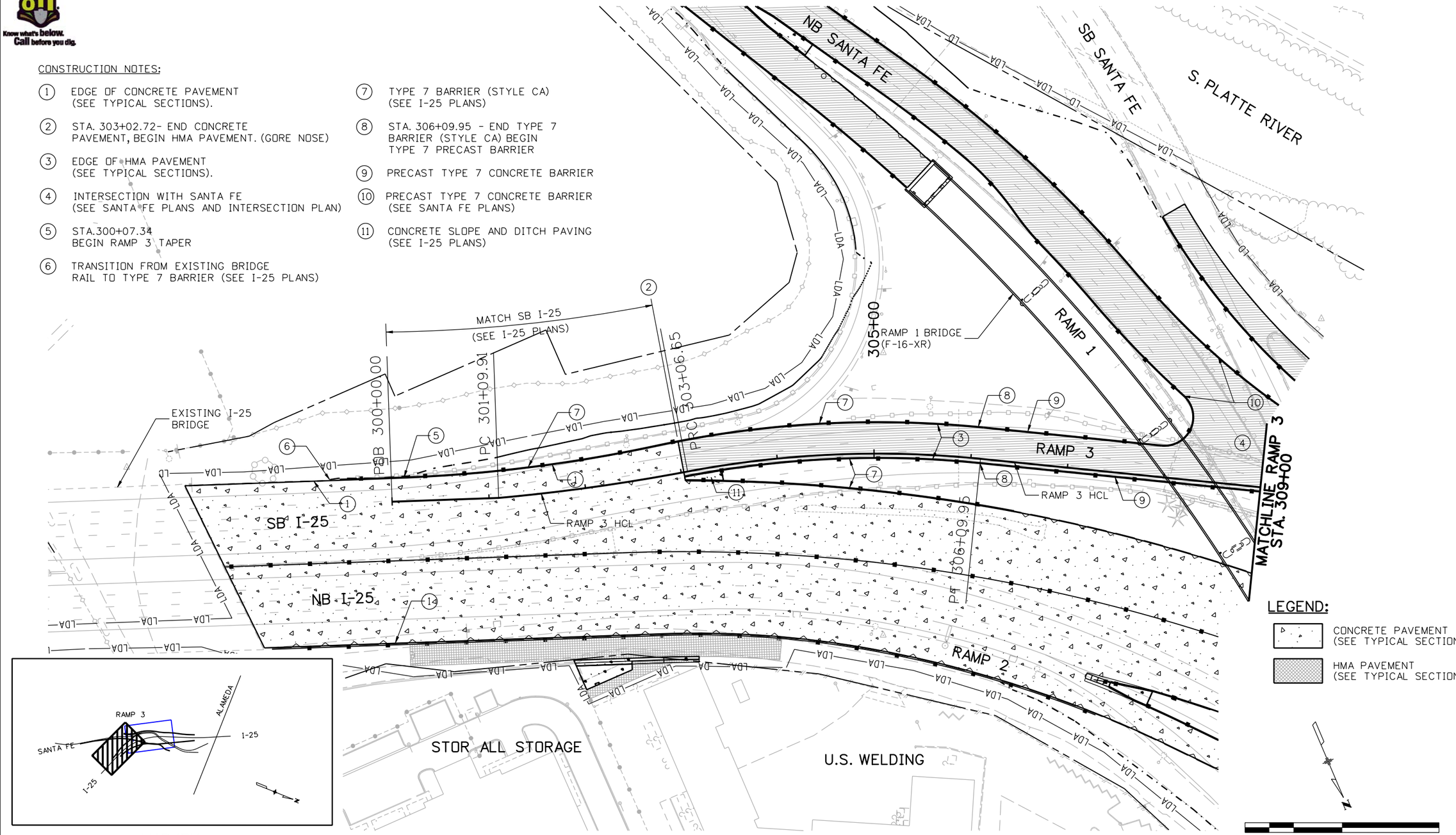

MAPKEY

LEGEND:

- CONCRETE PAVEMENT (SEE TYPICAL SECTIONS)
- HMA PAVEMENT (SEE TYPICAL SECTIONS)

0' 50' 100' 200'

Print Date: 9/27/2010
File Name: 16311DES_PH2_Ramp3Plan1.dgn
Horiz. Scale: 1:100 Vert. Scale: As Noted
Unit Information Unit Leader Initials

FELSBURG HOLT & ULLEVIG 6300 South Syracuse Way Centennial, CO 80111

Sheet Revisions		
Date:	Comments	Init.

Colorado Department of Transportation
DEPARTMENT OF TRANSPORTATION
2000 South Holly Street
Denver, CO 80222
Phone: 303-972-9112 FAX: 303-972-9114
Region 6 RLB

As Constructed
No Revisions:
Revised:
Void:

I-25/SANTA FE INTERCHANGE
RAMP 3 PLAN

Designer: SPG
Detailer: SYS
Sheet Subset: ROADWAY
Structure Numbers:
Subset Sheets: R3PL-1 of 2

Project No./Code
IM 0254-394
16311
Sheet Number 255

Stan 12:57:11 PM K:\08276\16311\Phase 2\Design\Drawings\16311DES_PH2_Ramp3Plan1.dgn
9/27/2010 CDOT-PDFDraftQuality_XM.pltcfg CDOT-PenTable.tbl

Know what's below. Call before you dig. 811

CONSTRUCTION NOTES:

1. INTERSECTION WITH SANTA FE (SEE SANTA FE PLANS AND INTERSECTION PLAN)
2. EDGE OF HMA PAVEMENT (SEE TYPICAL SECTIONS).
3. PRECAST TYPE 7 CONCRETE BARRIER (SEE SANTA FE PLANS)
4. TEMPORARY IMPACT ATTENUATOR (SEE SANTA FE PLANS)

LEGEND:

- CONCRETE PAVEMENT (SEE TYPICAL SECTIONS)
- HMA PAVEMENT (SEE TYPICAL SECTIONS)

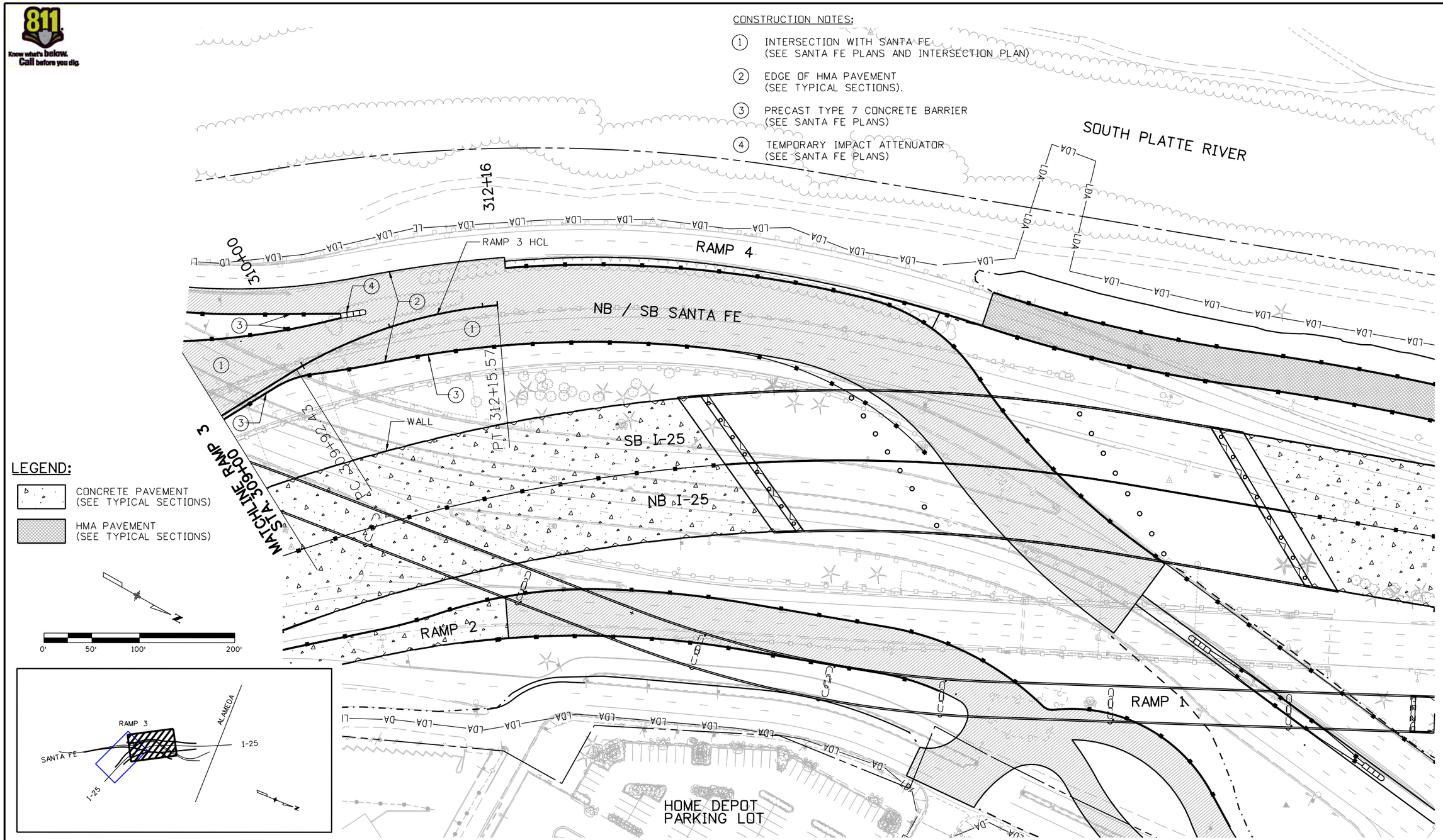

MAPKEY

Print Date: 9/27/2010		Sheet Revisions			Colorado Department of Transportation	As Constructed	I-25/SANTA FE INTERCHANGE	Project No./Code
File Name: 16311DES_PH2_Ramp3Plan2.dgn		Date:	Comments	Init.	2000 South Holly Street Denver, CO 80222 Phone: 303-972-9112 FAX: 303-972-9114	No Revisions:	RAMP 3 PLAN	IM 0254-394
Horiz. Scale: 1:100 Vert. Scale: As Noted						Revised:	Designer: SPG / Structure Numbers	16311
Unit Information Unit Leader Initials					Region 6 RLB	Void:	Detailer: SYS / Subset Sheets: R3PL-2of 2	Sheet Number 256
FELSBURG HOLT & ULLEVIG 6300 South Syracuse Way Centennial, CO 80111							Sheet Subset: ROADWAY	

Stan 12:57:17 PM K:\08276\16311\Phase 2\Design\Drawings\16311DES_PH2_Ramp3Plan2.dgn
9/27/2010 CDOT-PDFDraftQuality_XM.pltcfg CDOT-PenTable.tbl

Know what's below. Call before you dig.

CONSTRUCTION NOTES:

1. STA. 404+27.16 MATCH EXISTING RAMP SECTION BEGIN PRECAST TYPE 7 CONCRETE BARRIER.
2. EDGE OF HMA PAVEMENT (SEE TYPICAL SECTIONS).
3. MATCH EDGE OF REALIGNED SB SANTA FE (SEE SANTA FE PLANS) (SAW CUT LINE)
4. EXISTING TYPE 3 GUARDRAIL
5. STA. 403+04.80 BEGIN PRECAST TYPE 7 CONCRETE BARRIER
6. PRECAST TYPE 7 CONCRETE BARRIER

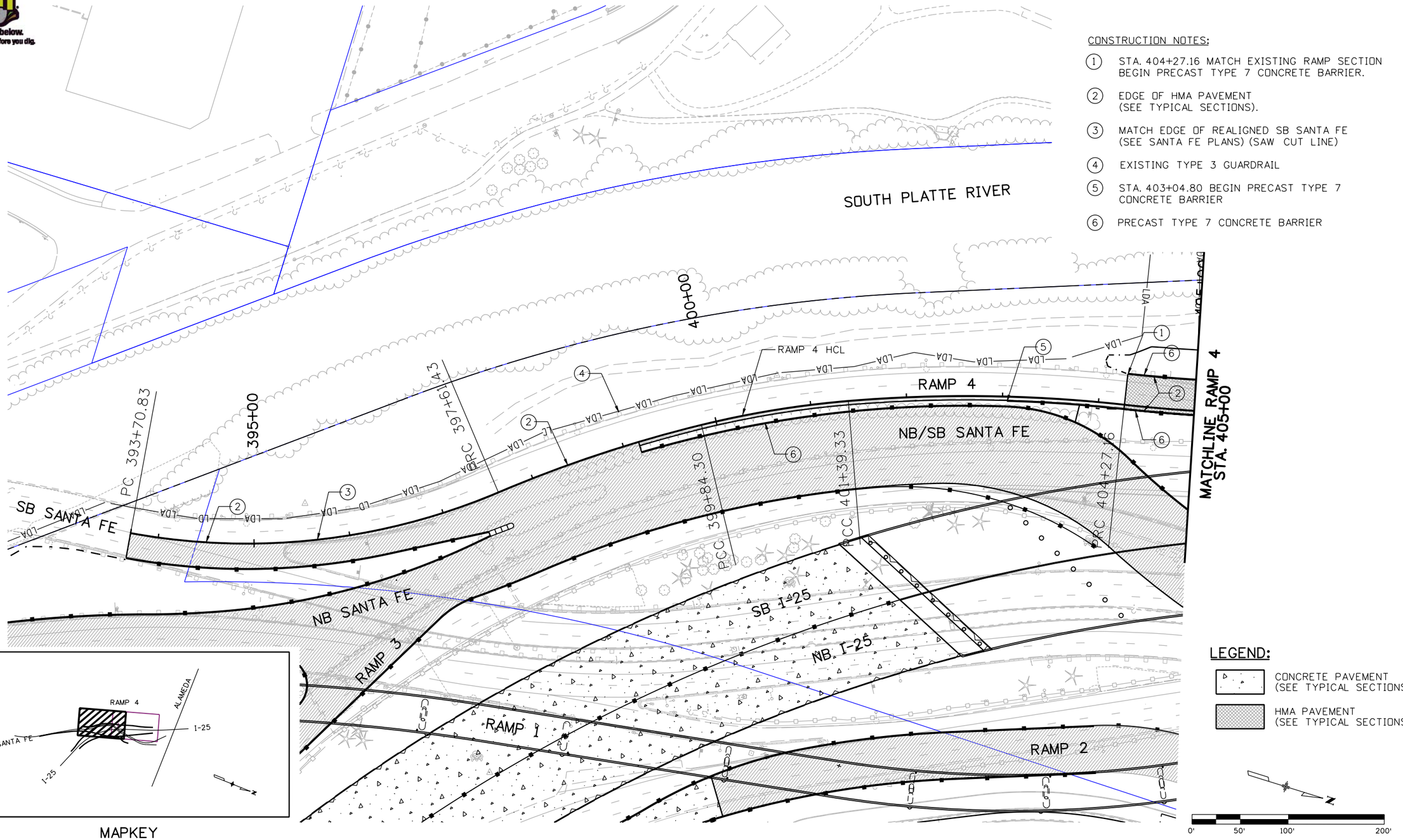

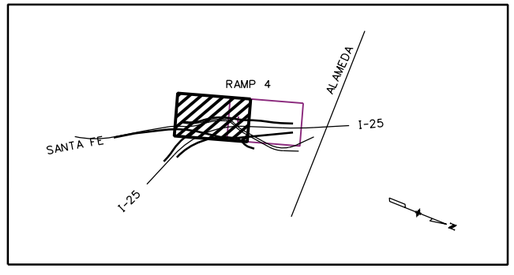

MAPKEY

LEGEND:

- CONCRETE PAVEMENT (SEE TYPICAL SECTIONS)
- HMA PAVEMENT (SEE TYPICAL SECTIONS)

0' 50' 100' 200'

Print Date: 9/27/2010	Sheet Revisions	Colorado Department of Transportation	As Constructed
File Name: 16311DES_PH2_Ramp4Plan1.dgn	Date: Comments: Init.	2000 South Holly Street, Denver, CO 80222	No Revisions:
Horiz. Scale: 1:100 Vert. Scale: As Noted		Phone: 303-972-9112 FAX: 303-972-9114	Revised:
Unit Information Unit Leader Initials		Region 6 RLB	Void:
FELSBURG HOLT & ULLEVIG 6300 South Syracuse Way Centennial, CO 80111			

I-25/SANTA FE INTERCHANGE
RAMP 4 PLAN

Designer:	SPG	Structure Numbers	
Detailer:	SYS		
Sheet Subset:	ROADWAY	Subset Sheets:	R4PL-1 of 2

Project No./Code	
IM 0254-394	
16311	
Sheet Number	257

Stan 12:57:24 PM K:\08276\16311\Phase 2\Design\Drawings\16311DES_PH2_Ramp4Plan1.dgn
9/27/2010 CDOT-PDFDraftQuality_XM.pltcfg CDOT-PenTable.tbl

Know what's below. Call before you dig.

CONSTRUCTION NOTES:

1. EDGE OF HMA PAVEMENT (SEE TYPICAL SECTIONS).
2. STA. 411+27.94 END HMA PAVEMENT, BEGIN CONCRETE PAVEMENT, END PRECAST TYPE 7 CONCRETE BARRIER, BEGIN GUARD RAIL TYPE 7 BARRIER (STYLE CA)
3. EDGE OF CONCRETE PAVEMENT (SEE TYPICAL SECTIONS).
4. STA. 415+91.51 TRANSITION TYPE 7 BARRIER TO MATCH EXISTING BARRIER.
5. PRECAST TYPE 7 CONCRETE BARRIER
6. GUARD RAIL TYPE 7 BARRIER (STYLE CA)
7. CONCRETE SLOPE AND DITCH PAVING (SEE I-25 PLANS)
8. GUARD RAIL TYPE 7 BARRIER (STYLE CE) (SEE I-25 PLANS)
9. IMPACT ATTENUATOR (SEE I-25 PLANS)
10. WALL WITH BRIDGE RAIL (SEE WALL PLANS)

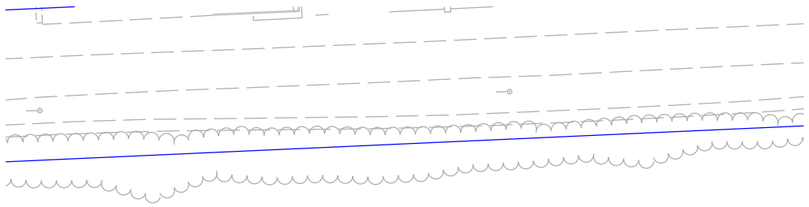

SOUTH PLATTE RIVER

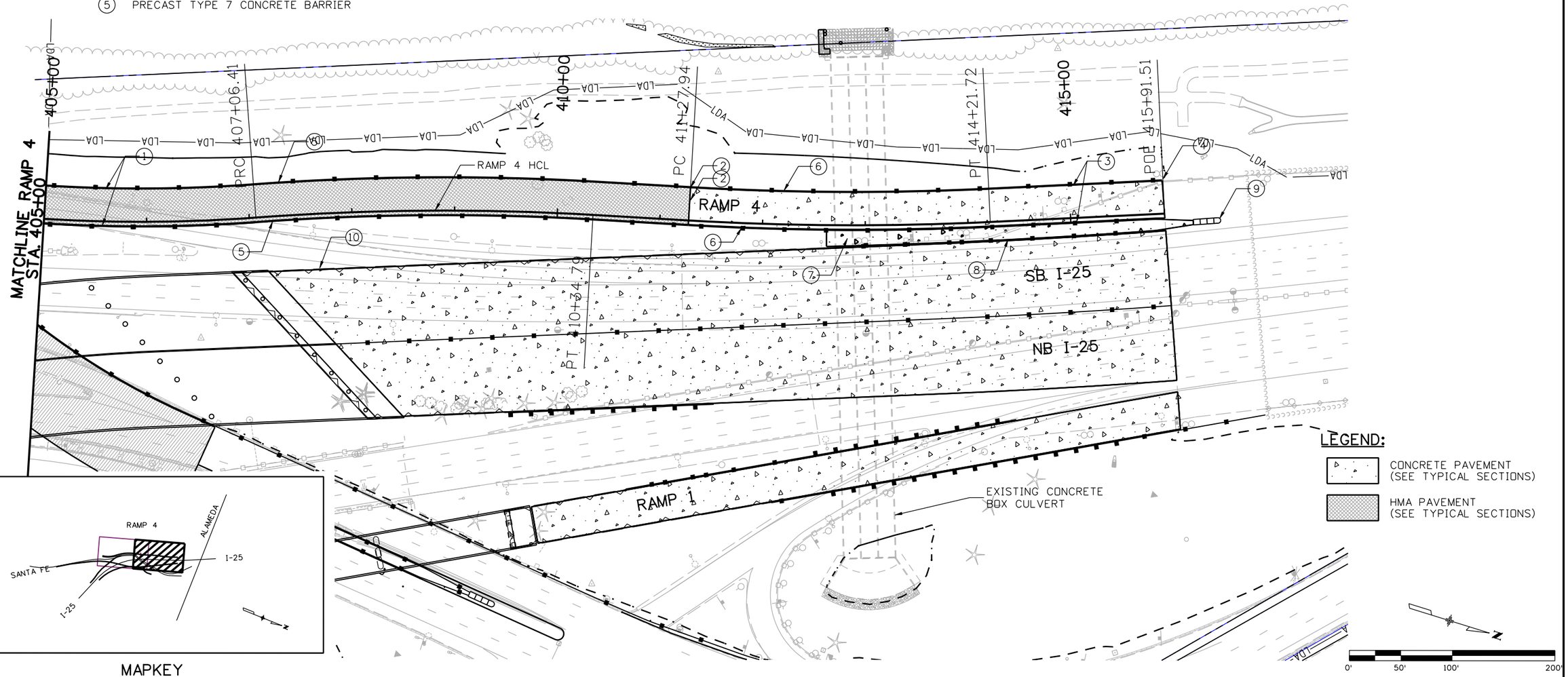

MAPKEY

Print Date: 9/27/2010
File Name: 16311DES_PH2_Ramp4Plan2.dgn
Horiz. Scale: 1:100 Vert. Scale: As Noted
Unit Information Unit Leader Initials

FELSBURG HOLT & ULLEVIG 6300 South Syracuse Way Centennial, CO 80111

Sheet Revisions		
Date:	Comments	Init.

Colorado Department of Transportation
DEPARTMENT OF TRANSPORTATION
2000 South Holly Street
Denver, CO 80222
Phone: 303-972-9112 FAX: 303-972-9114
Region 6 RLB

As Constructed
No Revisions:
Revised:
Void:

I-25/SANTA FE INTERCHANGE
RAMP 4 PLAN

Designer: SPG
Detailer: SYS
Sheet Subset: ROADWAY
Structure Numbers:
Subset Sheets: R4PL-2of 2

Project No./Code
IM 0254-394
16311
Sheet Number 258

Stan 12:57:29 PM K:\08276\16311\Phase 2\Design\Drawings\16311DES_PH2_Ramp4Plan2.dgn
9/27/2010 CDOT-PDFDraftQuality_XM.pltcfg CDOT-PenTable.tbl

811 Know what's below. Call before you dig.

W. MISSISSIPPI AVE.

W. TENNESSEE AVE.

VANDERBILT PARK

SOUTH PLATTE RIVER

SB SANTA FE (EXISTING)

BM

BM

LDA

INSTALL 250 FEET OF GUARDRAIL TYPE 3 (6'- 3" SPACING) WITH END ANCHORAGE (NON-FLARED) ON SOUTH END AND TYPE 3D END ANCHORAGE ON NORTH END (TYPICAL EACH SIDE OF NB SANTA FE). POSITION TO OVERHEAD SIGN STRUCTURE POST PER CDOT STANDARD M-606-1).

PC 700+00.00

NB SANTA FE (EXISTING)

NB SANTA FE HCL

705+00

PT 707+72.70

MATCHLINE NB SANTA FE STA. 708+00

GATES REDEVELOPMENT

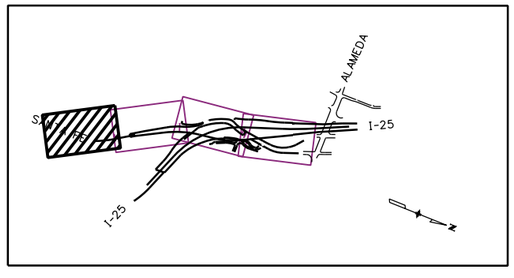

MAPKEY

LEGEND:

CONCRETE PAVEMENT (SEE TYPICAL SECTIONS)

HMA PAVEMENT (SEE TYPICAL SECTIONS)

0' 50' 100' 200'

Print Date: 9/27/2010
File Name: 16311DES_PH2_SantaFePlan1.dgn
Horiz. Scale: 1:100 Vert. Scale: As Noted
Unit Information Unit Leader Initials

FELSBURG HOLT & ULLEVIG 6300 South Syracuse Way Centennial, CO 80111

Sheet Revisions		
Date:	Comments	Init.

Colorado Department of Transportation
DEPARTMENT OF TRANSPORTATION
2000 South Holly Street
Denver, CO 80222
Phone: 303-972-9112 FAX: 303-972-9114
Region 6 RLB

As Constructed
No Revisions:
Revised:
Void:

I-25/SANTA FE INTERCHANGE
SANTA FE ROADWAY PLAN

Designer: SPG
Detailer: SYS
Sheet Subset: ROADWAY
Structure Numbers
Subset Sheets: SFPL-1 of 4

Project No./Code
IM 0254-394
16311
Sheet Number 259

Stan 12:57:35 PM K:\08276\16311\Phase 2\Design\Drawings\16311DES_PH2_SantaFePlan1.dgn
9/27/2010 CDOT-PDFDraftQuality_XM.pltcfg CDOT-PenTable.tbl

Know what's below. Call before you dig.

CONSTRUCTION NOTES:

1. BEGIN NB SANTA FE CONSTRUCTION, MATCH EXISTING CURB AND GUTTER (FLOWLINE STA. 712+52.54
2. CURB AND GUTTER TYPE 2 (SEC. IIB) (CATCH).
3. PCR (FLOWLINE STA. 714+49.90, 55.73' RT, RAD.= 25').
4. END OF CURB (FLOWLINE STA. 714+67.26, 64.03' RT, RAD.= 25').
5. EDGE OF HMA PAVEMENT (SEE TYPICAL SECTIONS).
6. GORE NOSE- STA. 716+72.37 (PROVIDE OPENINGS IN BARRIERS FOR DRAINAGE).
7. BEGIN AUX. LANE TAPER- STA. 719+49.18, 26.00' RT (R=300'@ EOP)
8. END AUX. LANE TAPER- STA. 720+75.37, 38.00' RT (R=300'@ EOP)
9. CONSTRUCT CURB & GUTTER 'CONFLUENCE' CURBING TO MERGE GUTTER FLOWS FROM THE SOUTH SIDE OF OHIO AND THE EAST SIDE OF SANTA FE.
10. STA. 712+52.70 - BEGIN PRECAST TYPE 7 CONCRETE BARRIER

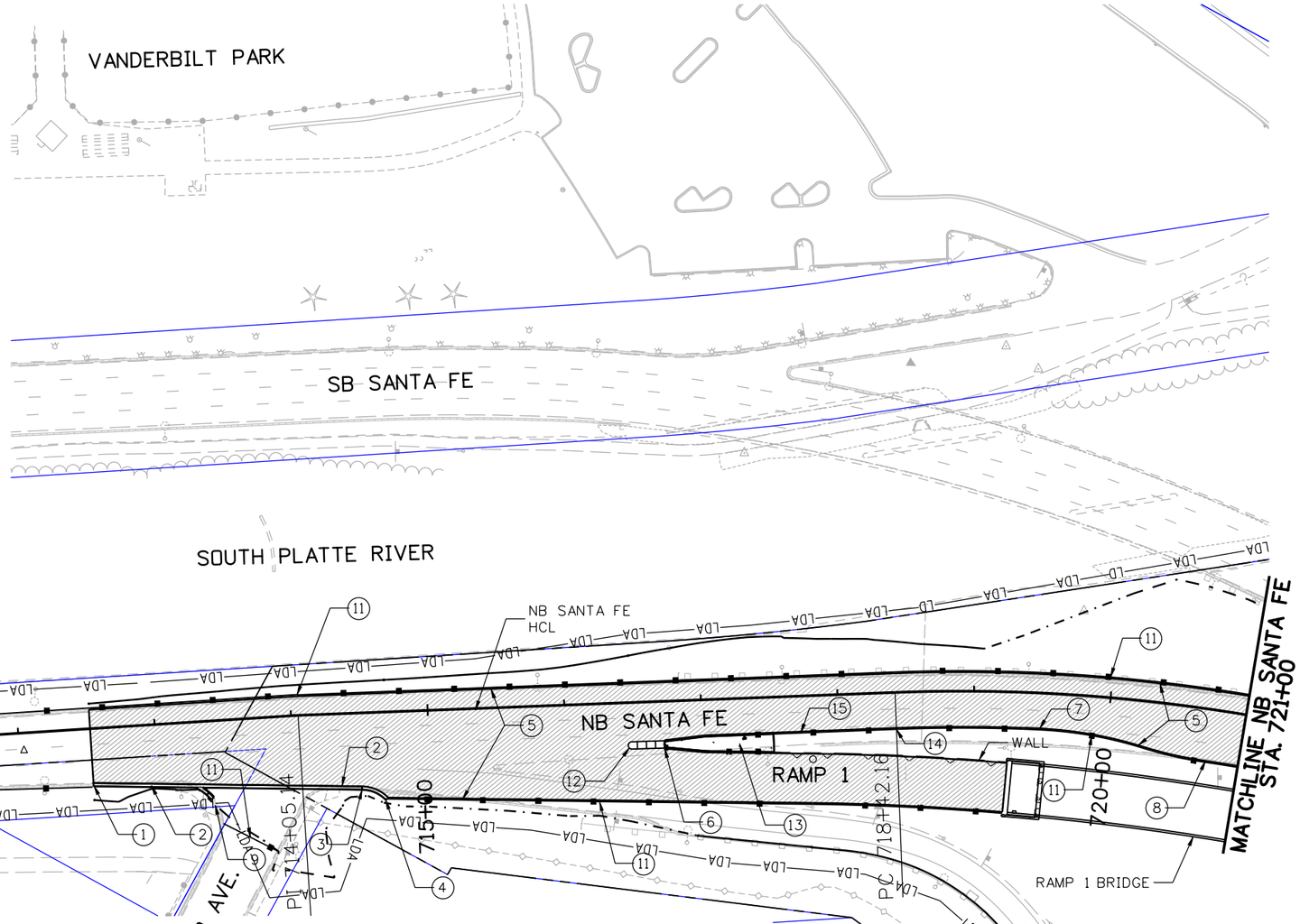

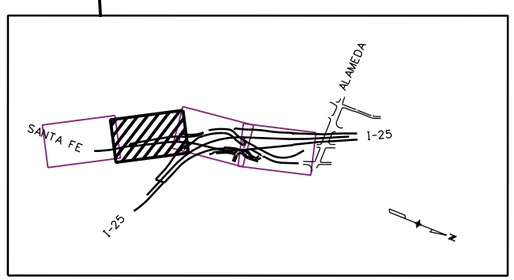

MAPKEY

LEGEND:

- CONCRETE PAVEMENT (SEE TYPICAL SECTIONS)
- HMA PAVEMENT (SEE TYPICAL SECTIONS)

CONSTRUCTION NOTES CONT.:

11. PRECAST TYPE 7 CONCRETE BARRIER
12. IMPACT ATTENUATOR (SEE RAMP 1)
13. CONCRETE SLOPE AND DITCH PAVING (SEE RAMP 1)
14. STA. 718+42.16 - END TYPE 7 BARRIER (STYLE CA), BEGIN PRECAST TYPE 7 CONCRETE BARRIER
15. TYPE 7 BARRIER (STYLE CA)
16. TYPE 7 BARRIER (STYLE CE) (SEE RAMP 1)

Print Date: 9/27/2010	Sheet Revisions	Colorado Department of Transportation	As Constructed
File Name: 16311DES_PH2_SantaFePlan2.dgn	Date: / Comments / Init.	2000 South Holly Street, Denver, CO 80222	No Revisions:
Horiz. Scale: 1:100 Vert. Scale: As Noted		Phone: 303-972-9112 FAX: 303-972-9114	Revised:
Unit Information Unit Leader Initials		Region 6 RLB	Void:
FELSBURG HOLT & ULLEVIG 6300 South Syracuse Way Centennial, CO 80111			

I-25/SANTA FE INTERCHANGE
SANTA FE ROADWAY PLAN

Designer:	SPG	Structure Numbers	
Detailer:	SYS		
Sheet Subset:	ROADWAY	Subset Sheets:	SFPL-2of 4

Project No./Code: IM 0254-394
16311
Sheet Number 260

Stan 12:57:43 PM K:\08276\16311\Phase 2\Design\Drawings\16311DES_PH2_SantaFePlan2.dgn
9/27/2010 CDOT-PDFDraftQuality_XM.pltcfg CDOT-PenTable.tbl

Know what's below. Call before you dig. 811

CONSTRUCTION NOTES:

1. SEE SANTA FE, RAMP 3, AND RAMP 4 INTERSECTION DETAIL PLAN. (SHEET INT-1)
2. MATCH SB SANTA FE TO EXISTING RAMP 4 (SEE TYPICAL SECTIONS)(SAWCUT LINE).
3. EDGE OF HMA PAVEMENT (SEE TYPICAL SECTIONS).
4. STA. 722+83.92 (38' RT) END AUXILIARY LANE (EOP).
5. BEGIN MATCHING EXISTING RAMP 4 STA. 810+56.44
6. STA. 725+31.77 STA. 808+80.44 - GORE NOSE
7. SHIFT BARRIER TO ABUT BRIDGE PIER (FOR SIGHT DISTANCE)
8. STA. 734+71.79 - MATCH EXISTING NB SANTA FE PAVEMENT
9. STA. 818+43.15 - MATCH EXISTING SB SANTA FE PAVEMENT
10. PRECAST TYPE 7 CONCRETE BARRIER
11. TEMPORARY IMPACT ATTENUATOR

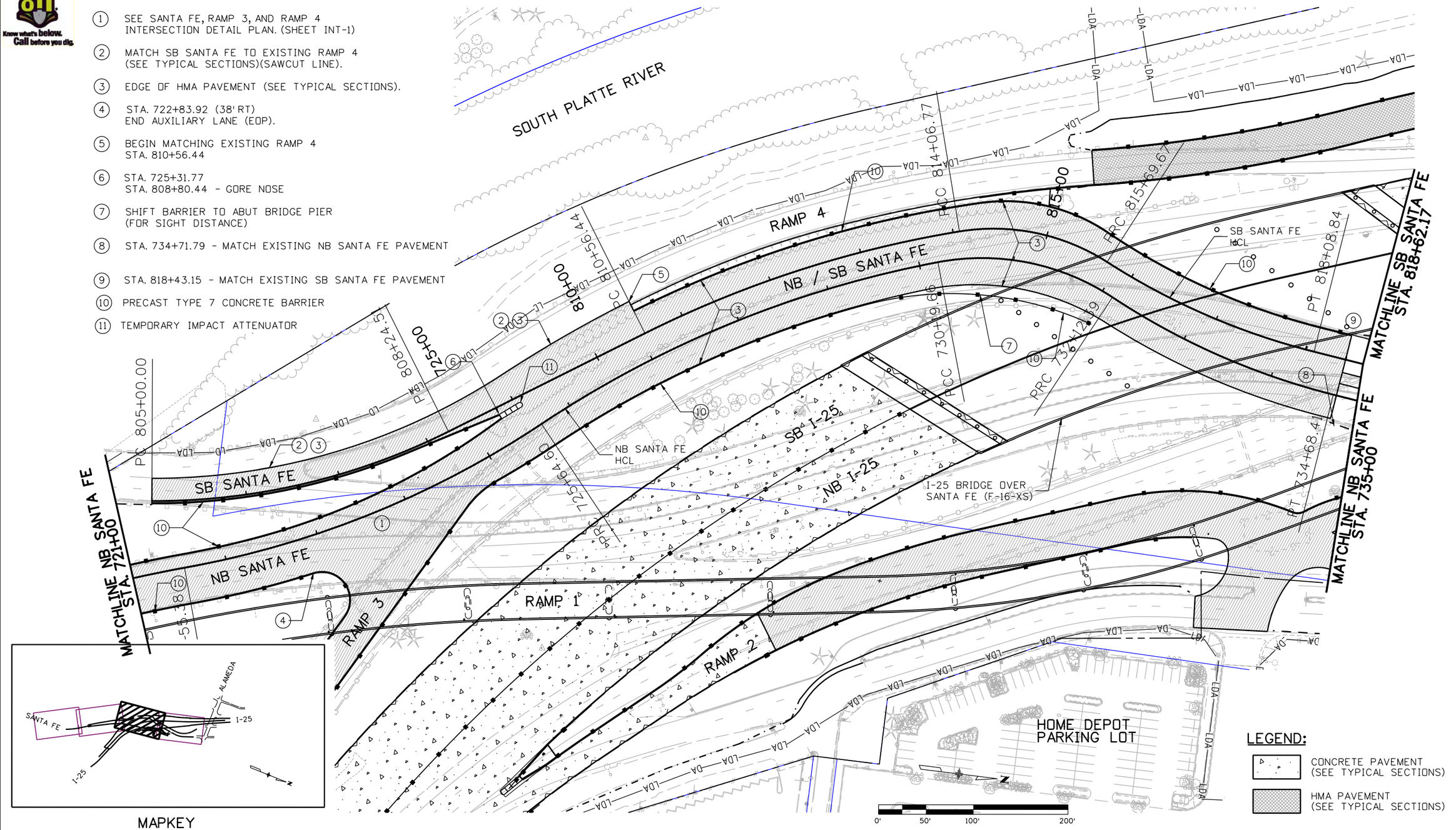

MAPKEY

LEGEND:

- CONCRETE PAVEMENT (SEE TYPICAL SECTIONS)
- HMA PAVEMENT (SEE TYPICAL SECTIONS)

Print Date: 9/27/2010	Sheet Revisions		
File Name: 16311DES_PH2_SantaFePlan3.dgn	Date:	Comments	Init.
Horiz. Scale: 1:100 Vert. Scale: As Noted			
Unit Information Unit Leader Initials			
FELSBURG HOLT & ULLEVIG 6300 South Syracuse Way Centennial, CO 80111			

Colorado Department of Transportation
DEPARTMENT OF TRANSPORTATION
2000 South Holly Street
Denver, CO 80222
Phone: 303-972-9112 FAX: 303-972-9114
Region 6 RLB

As Constructed
No Revisions:
Revised:
Void:

I-25/SANTA FE INTERCHANGE
SANTA FE ROADWAY PLAN

Designer:	SPG	Structure Numbers	
Detailer:	SYS		
Sheet Subset:	ROADWAY	Subset Sheets:	SFPL-3of 4

Project No./Code
IM 0254-394
16311
Sheet Number 261

Stan 12:57:48 PM K:\08276\16311\Phase 2\Design\Drawings\16311DES_PH2_SantaFePlan3.dgn
9/27/2010 CDOT-PDFDraftQuality_XM.pltcfg CDOT-PenTable.tbl

Know what's below. Call before you dig.

CONSTRUCTION NOTES:

1. LIMITS OF ASPHALT REMOVAL (SAWCUT LINE). (SEE REMOVAL PLANS)
2. EXISTING ENTRANCE RAMP TO NB I-25 TO BE REMOVED. (SEE REMOVAL PLANS)
3. PRECAST TYPE 7 CONCRETE BARRIER.
4. TEMPORARY IMPACT ATTENUATOR.
5. GORE NOSE STA. 738+70.04 STA. 822+35.87
6. GORE NOSE STA. 735+70.07 STA. 819+35.53
7. GORE NOSE STA. 737+69.65 STA. 821+35.50

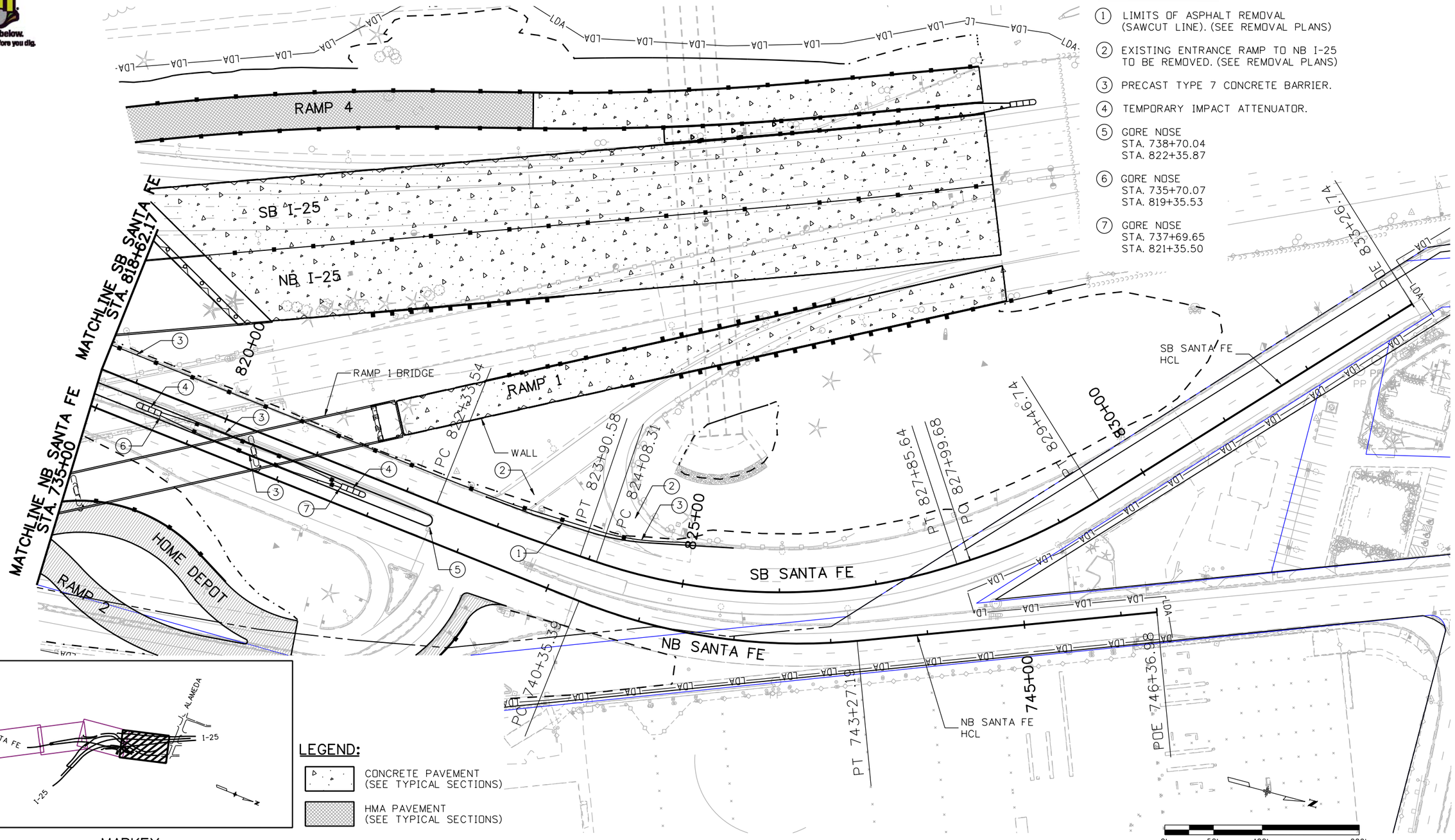

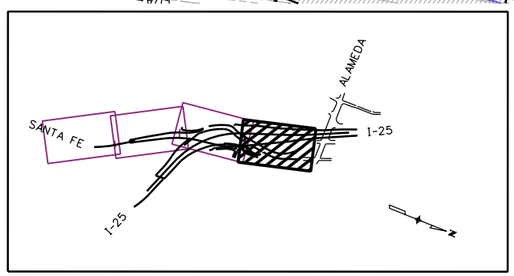

MAPKEY

LEGEND:

- CONCRETE PAVEMENT (SEE TYPICAL SECTIONS)
- HMA PAVEMENT (SEE TYPICAL SECTIONS)

Print Date: 9/27/2010	Sheet Revisions		
File Name: 16311DES_PH2_SantaFePlan4.dgn	Date:	Comments	Init.
Horiz. Scale: 1:100 Vert. Scale: As Noted			
Unit Information Unit Leader Initials			
FELSBURG HOLT & ULLEVIG 6300 South Syracuse Way Centennial, CO 80111			

Colorado Department of Transportation
DEPARTMENT OF TRANSPORTATION
2000 South Holly Street
Denver, CO 80222
Phone: 303-972-9112 FAX: 303-972-9114
Region 6 RLB

As Constructed	I-25/SANTA FE INTERCHANGE			Project No./Code
No Revisions:	SANTA FE ROADWAY PLAN			IM 0254-394
Revised:	Designer: SPG	Structure Numbers		16311
Void:	Detailer: SYS			
	Sheet Subset: ROADWAY	Subset Sheets: SFPL-4 of 4		Sheet Number 262

Stan 12:57:53 PM K:\08276\16311\Phase 2\Design\Drawings\16311DES_PH2_SantaFePlan4.dgn
9/27/2010 CDOT-PDFDraftQuality_XM.pltcfg CDOT-PenTable.tbl

Know what's below. Call before you dig.

CONSTRUCTION NOTES:

1. EDGE OF HMA
2. PAVED 'ISLAND'
3. PRECAST TYPE 7 CONCRETE BARRIER (SEE TYPICAL SECTIONS).
4. TEMPORARY IMPACT ATTENUATOR
5. SAW CUT LINE

LEGEND:

- CONCRETE PAVEMENT (SEE TYPICAL SECTIONS)
- HMA PAVEMENT (SEE TYPICAL SECTIONS)

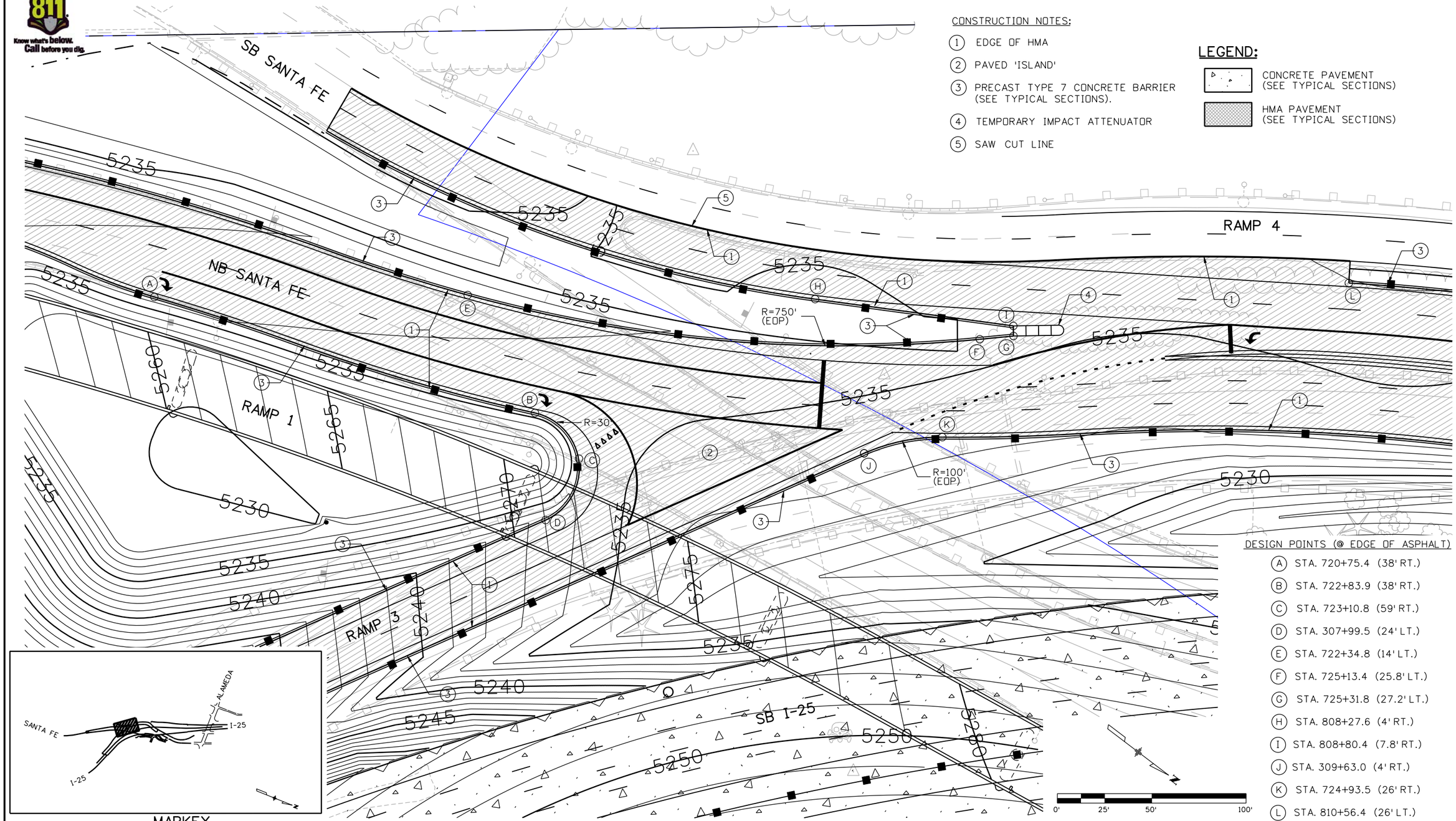

DESIGN POINTS (@ EDGE OF ASPHALT)

- (A) STA. 720+75.4 (38' RT.)
- (B) STA. 722+83.9 (38' RT.)
- (C) STA. 723+10.8 (59' RT.)
- (D) STA. 307+99.5 (24' LT.)
- (E) STA. 722+34.8 (14' LT.)
- (F) STA. 725+13.4 (25.8' LT.)
- (G) STA. 725+31.8 (27.2' LT.)
- (H) STA. 808+27.6 (4' RT.)
- (I) STA. 808+80.4 (7.8' RT.)
- (J) STA. 309+63.0 (4' RT.)
- (K) STA. 724+93.5 (26' RT.)
- (L) STA. 810+56.4 (26' LT.)

0' 25' 50' 100'

MAPKEY

Print Date: 9/27/2010	Sheet Revisions		
File Name: 16311DES_PH2_SFe-Ramps3-4Plan1.dgn	Date:	Comments	Init.
Horiz. Scale: 1:50 Vert. Scale: As Noted			
Unit Information Unit Leader Initials			
FELSBURG HOLT & ULLEVIG 6300 South Syracuse Way Centennial, CO 80111			

Colorado Department of Transportation
DEPARTMENT OF TRANSPORTATION
2000 South Holly Street
Denver, CO 80222
Phone: 303-972-9112 FAX: 303-972-9114
Region 6 RLB

As Constructed
No Revisions:
Revised:
Void:

I-25/SANTA FE INTERCHANGE SANTA FE/RAMP 3/RAMP 4 INTERSECTION PLAN

Designer: SPG
Detailer: SYS
Sheet Subset: ROADWAY
Structure Numbers:
Subset Sheets: INT-1 of 1

Project No./Code
IM 0254-394
16311
Sheet Number 263

Stan 12:58:01 PM K:\08276\16311\Phase 2\Design\Drawings\16311DES_PH2_SFe-Ramps3-4Plan1.dgn
9/27/2010 CDOT-PDFDraftQuality_XM.pltcfg CDOT-PenTable.tbl

Know what's below. Call before you dig.

CONSTRUCTION NOTES:

1. MATCH EXISTING PAVEMENT (SAWCUT LINE)
2. EDGE OF HMA PAVEMENT (SEE TYPICAL SECTIONS).
3. TYPE 7 PRECAST TEMPORARY BARRIER WITH GLARE SCREEN.
4. STA. 96+30.82 + MATCH EXISTING PAVEMENT (SAWCUT LINE)

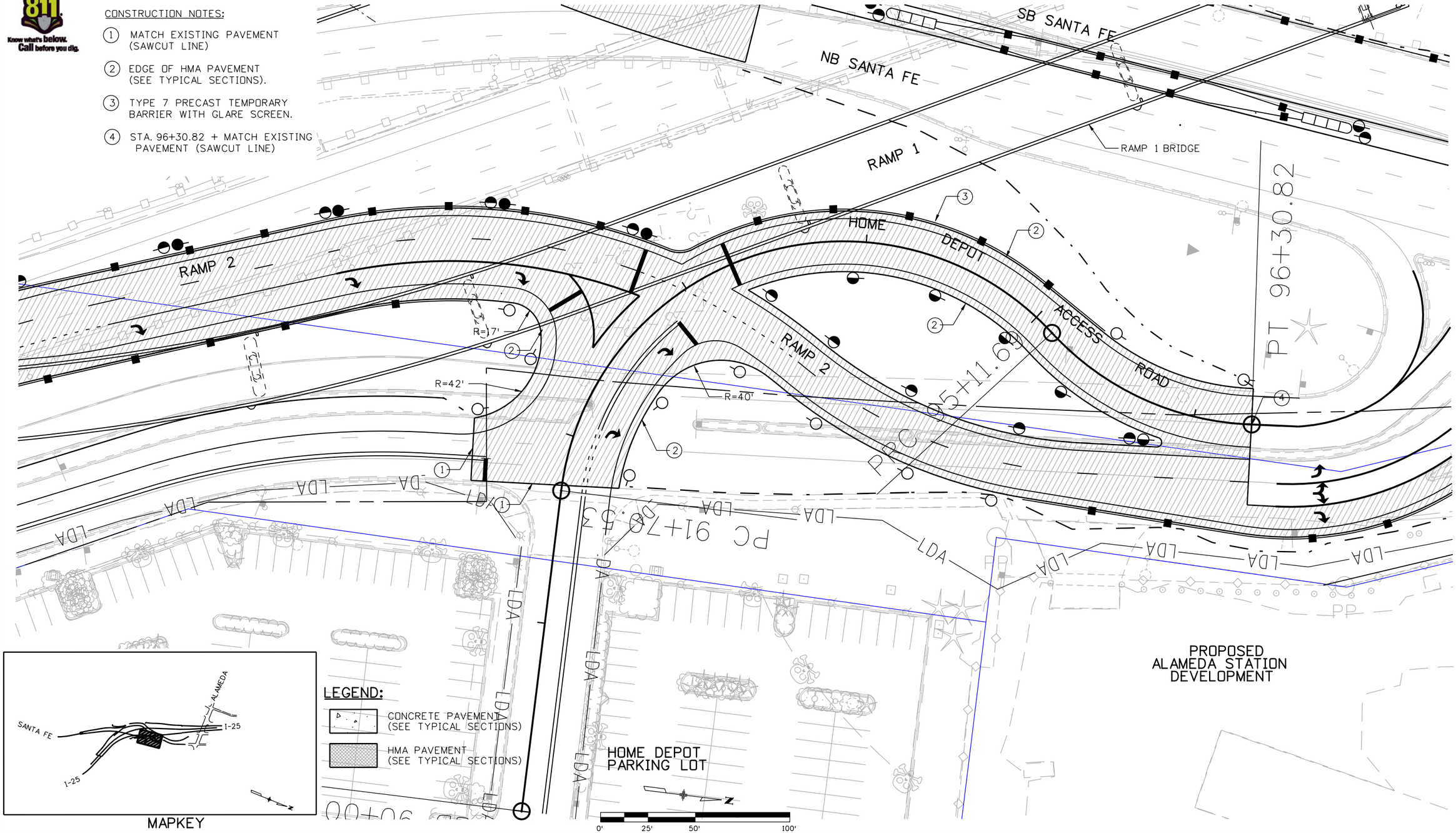

MAPKEY

LEGEND:

- CONCRETE PAVEMENT (SEE TYPICAL SECTIONS)
- HMA PAVEMENT (SEE TYPICAL SECTIONS)

Print Date: 9/27/2010	Sheet Revisions		
File Name: 16311DES_PH2_HomeDepotPlan1.dgn	Date:	Comments	Init.
Horiz. Scale: 1:50 Vert. Scale: As Noted			
Unit Information Unit Leader Initials			
FELSBURG HOLT & ULLEVIG 6300 South Syracuse Way Centennial, CO 80111			

Colorado Department of Transportation
DOT DEPARTMENT OF TRANSPORTATION
2000 South Holly Street
Denver, CO 80222
Phone: 303-972-9112 FAX: 303-972-9114
Region 6 RLB

As Constructed	I-25/SANTA FE INTERCHANGE HOME DEPOT ACCESS PLAN			Project No./Code
No Revisions:				IM 0254-394
Revised:	Designer: SPG	Structure Numbers		16311
Void:	Detailer: SYS			
	Sheet Subset: ROADWAY	Subset Sheets: HPL-1 of 1		Sheet Number 264

Stan 12:58:06 PM K:\08276\16311\Phase 2\Design\Drawings\16311DES_PH2_HomeDepotPlan1.dgn
9/27/2010 CDOT-PDFDraftQuality_XM.pltcfg CDOT-PenTable.tbl

Know what's below. Call before you dig.

CONTROL LINE DATA - I-25 Frontage Road

POINT ID	BEARING	DISTANCE (FEET)	NORTHING (Y)	EASTING (X)	PC	PI	PT	DELTA	R	L	T
POB	N 83°23'14" W	133.828 '	679655.9686	962149.8900		10+00.000					
PI C-FR.PH2.1	N 68°55'35" W	373.383 '	679676.5664	961972.2137	11+33.828		12+23.426	14°27'39"	355.000 '	89.599 '	45.039 '
PI C-FR.PH2.2	N 57°12'38" W	235.879 '	679823.0060	961592.1859	14+84.390		16+86.212	11°42'57"	987.000 '	201.822 '	101.264 '
PI C-FR.PH2.3	N 50°40'07" W	211.043 '	679914.3362	961450.4120	16+86.212		18+20.827	6°32'31"	1179.000 '	134.615 '	67.381 '
PI C-FR.PH2.4	N 27°28'56" W	179.893 '	680003.2008	961341.9617	18+20.827		19+64.489	23°11'12"	355.000 '	143.662 '	72.828 '
POE			680162.7937	961258.9463		20+71.554					

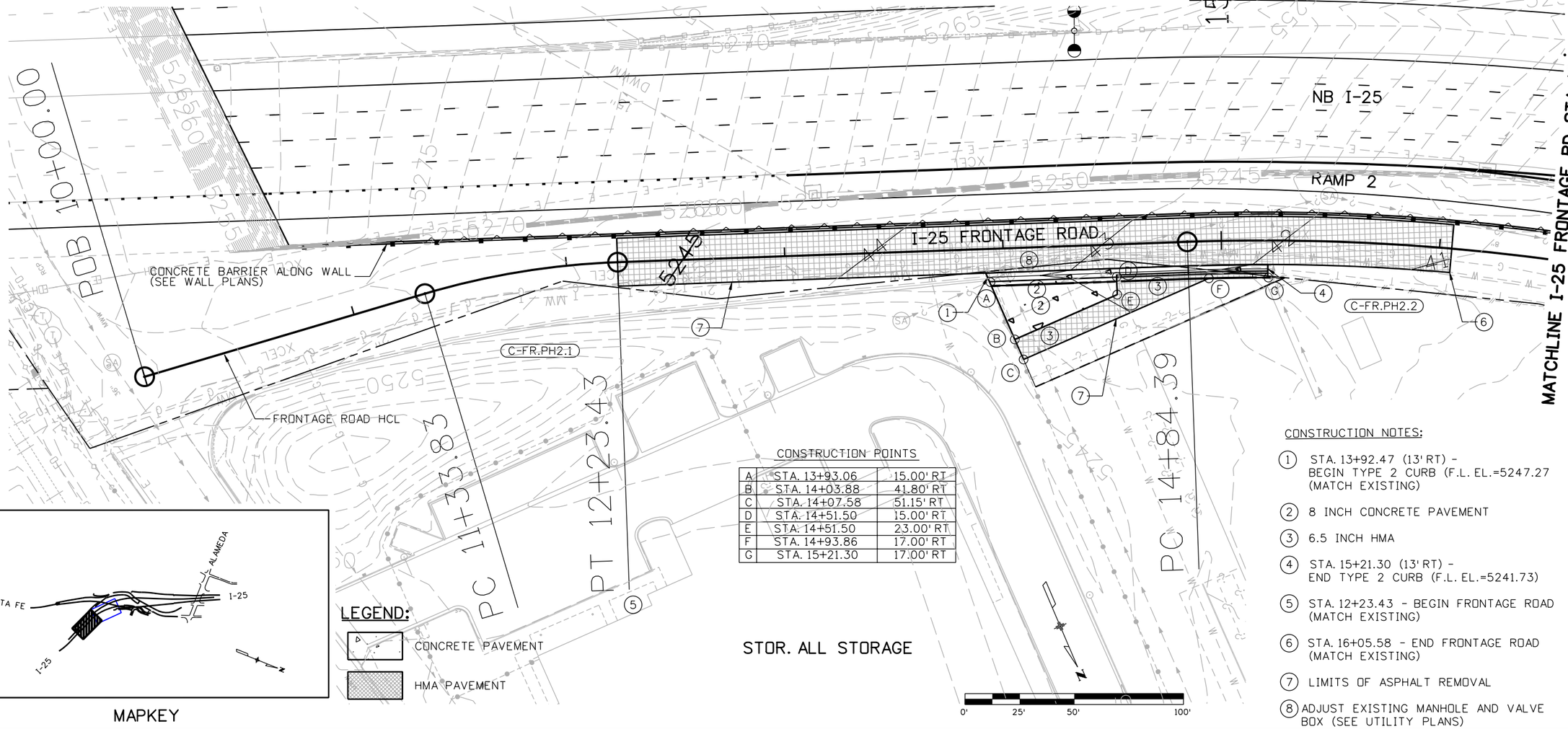

CONSTRUCTION POINTS

A	STA. 13+93.06	15.00' RT
B	STA. 14+03.88	41.80' RT
C	STA. 14+07.58	51.15' RT
D	STA. 14+51.50	15.00' RT
E	STA. 14+51.50	23.00' RT
F	STA. 14+93.86	17.00' RT
G	STA. 15+21.30	17.00' RT

CONSTRUCTION NOTES:

1. STA. 13+92.47 (13' RT) - BEGIN TYPE 2 CURB (F.L. EL.=5247.27 (MATCH EXISTING)
2. 8 INCH CONCRETE PAVEMENT
3. 6.5 INCH HMA
4. STA. 15+21.30 (13' RT) - END TYPE 2 CURB (F.L. EL.=5241.73)
5. STA. 12+23.43 - BEGIN FRONTAGE ROAD (MATCH EXISTING)
6. STA. 16+05.58 - END FRONTAGE ROAD (MATCH EXISTING)
7. LIMITS OF ASPHALT REMOVAL
8. ADJUST EXISTING MANHOLE AND VALVE BOX (SEE UTILITY PLANS)

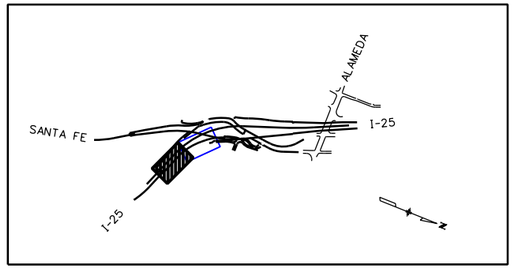

MAPKEY

LEGEND:

CONCRETE PAVEMENT

HMA PAVEMENT

Print Date: 9/27/2010
File Name: 16311DES_PH2_FrontageRdPlan1.dgn
Horiz. Scale: 1:50 Vert. Scale: As Noted
Unit Information Unit Leader Initials

FELSBURG HOLT & ULLEVIG 6300 South Syracuse Way Centennial, CO 80111

Sheet Revisions		
Date:	Comments	Init.

Colorado Department of Transportation
DEPARTMENT OF TRANSPORTATION
2000 South Holly Street
Denver, CO 80222
Phone: 303-972-9112 FAX: 303-972-9114
Region 6 RLB

As Constructed
No Revisions:
Revised:
Void:

I-25/SANTA FE INTERCHANGE
I-25 FRONTAGE ROAD PLAN

Designer: SPG
Detailer: SYS
Sheet Subset: ROADWAY
Structure Numbers:
Subset Sheets: FRPL-1 of 2

Project No./Code
IM 0254-394
16311
Sheet Number 265

Stan 12:58:12 PM K:\08276\16311\Phase 2\Design\Drawings\16311DES_PH2_FrontageRdPlan1.dgn
9/27/2010 CDOT-PDFDraftQuality_XM.pltcfg CDOT-PenTable.tbl

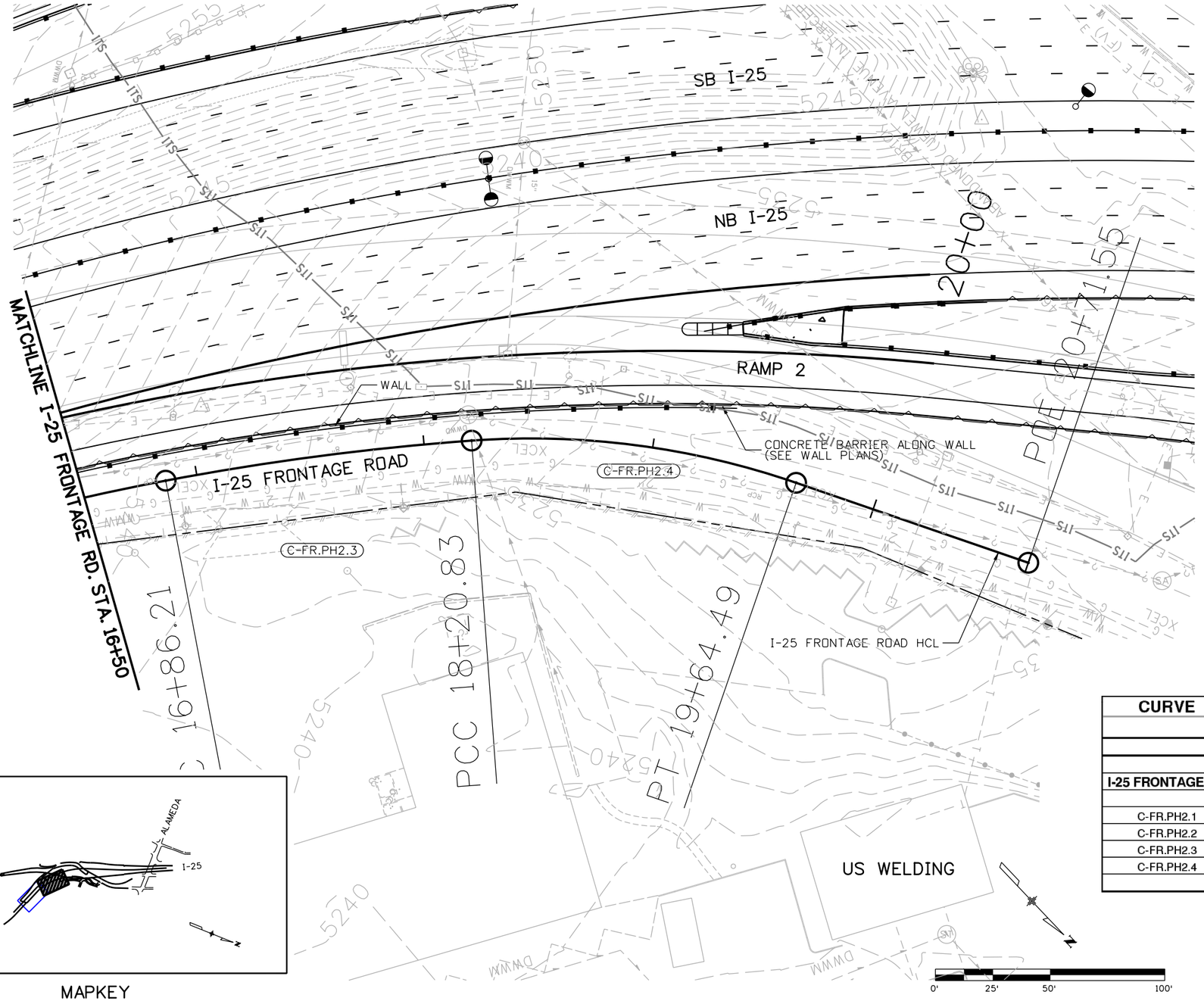

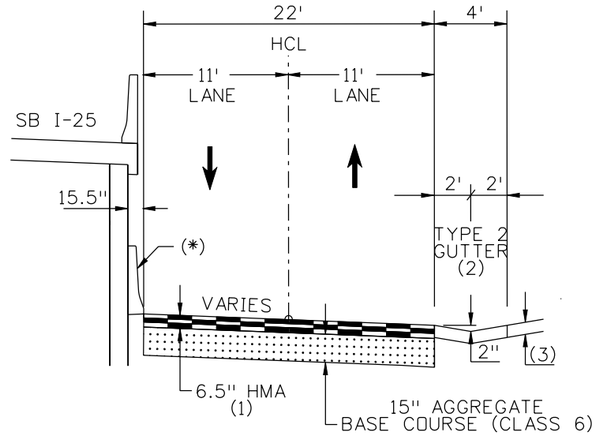

(*) TYPE 7 BARRIER (STYLE CD) SEE WALL PLANS

(1) 6.5" MINIMUM THICKNESS, MATCH EXISTING THICKNESS IF GREATER THAN 6.5 INCHES.

(2) SEE PLAN FOR LIMITS OF TYPE 2 GUTTER

(3) 8 INCH CONCRETE OR 6.5 INCH HMA

I-25 FRONTAGE ROAD
(STA. 12+23.43 TO STA. 16+05.58)

CURVE	CENTRAL ANGLE	RADIUS AT HCL	LENGTH
	(degree)	(feet)	(feet)
I-25 FRONTAGE RD			
C-FR.PH2.1	14deg27'39"	355.00	89.60
C-FR.PH2.2	11deg42'57"	987.00	201.82
C-FR.PH2.3	06deg32'31"	1179.00	134.62
C-FR.PH2.4	23deg11'12"	355.00	143.66

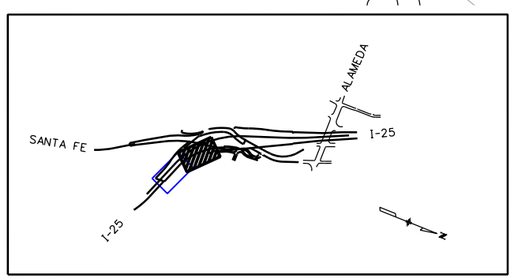

MAPKEY

Print Date: 9/27/2010
File Name: 16311DES_PH2_FrontageRdPlan2.dgn
Horiz. Scale: 1:50 Vert. Scale: As Noted
Unit Information Unit Leader Initials

FELSBURG HOLT & ULLEVIG 6300 South Syracuse Way Centennial, CO 80111

Sheet Revisions		
Date:	Comments	Init.

Colorado Department of Transportation
2000 South Holly Street
Denver, CO 80222
Phone: 303-972-9112 FAX: 303-972-9114
Region 6 RLB

As Constructed
No Revisions:
Revised:
Void:

I-25/SANTA FE INTERCHANGE
I-25 FRONTAGE ROAD PLAN

Designer: SPG
Detailer: SYS
Sheet Subset: ROADWAY
Structure Numbers:
Subset Sheets:FRPL-2of 2

Project No./Code
IM 0254-394
16311
Sheet Number 266

Stan 12:58:17 PM K:\08276\16311\Phase 2\Design\Drawings\16311DES_PH2_FrontageRdPlan2.dgn
9/27/2010 CDOT-PDFDraftQuality_XM.pltcfg CDOT-PenTable.tbl

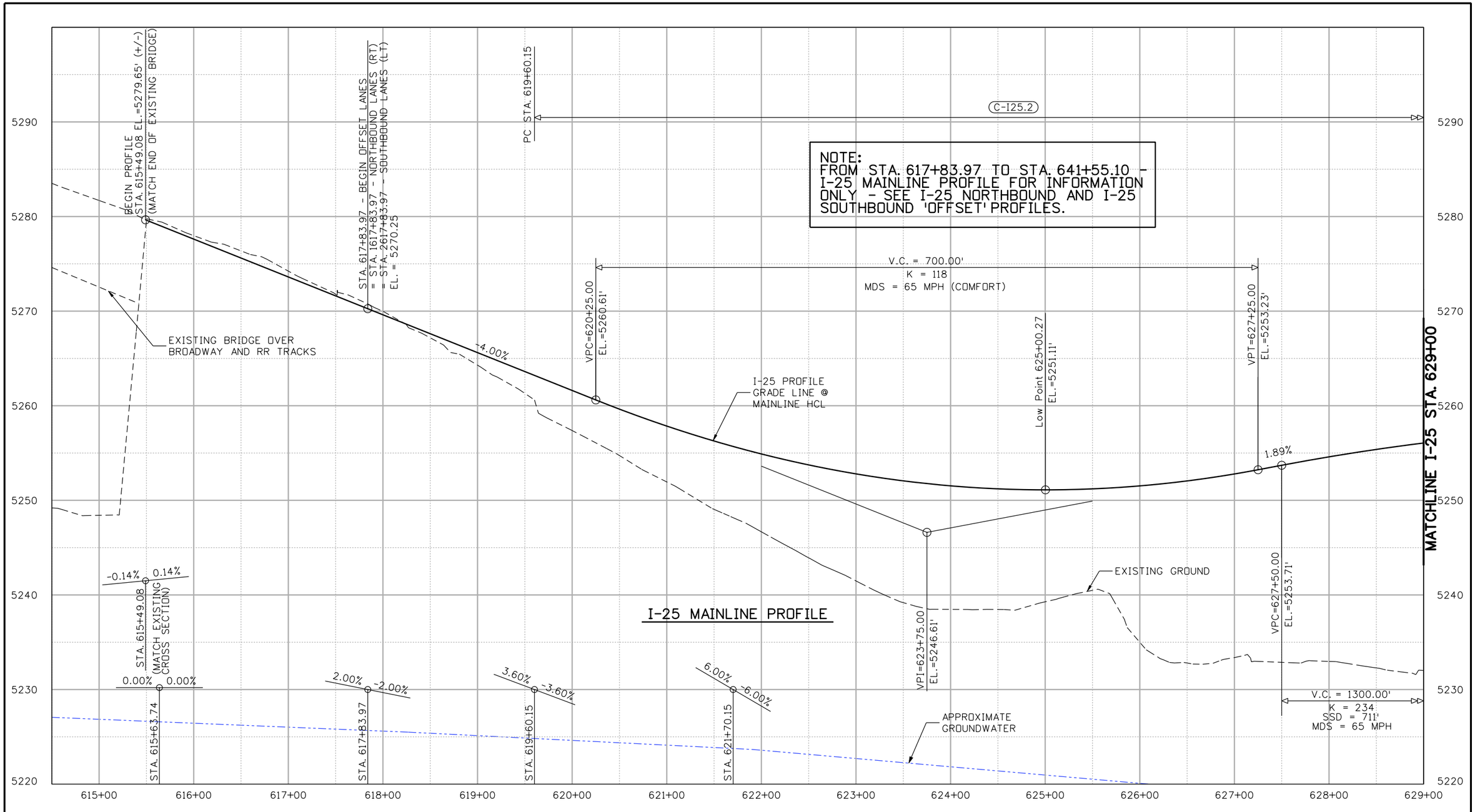

SCALE: 1"=100' HORIZ.
1"=10' VERT.

Print Date: 9/27/2010	Sheet Revisions	Colorado Department of Transportation	As Constructed
File Name: 16311DES_PH2_I25Pro1.dgn	Date: / Comments / Init.	2000 South Holly Street, Denver, CO 80222	No Revisions:
Horiz. Scale: 1:100 Vert. Scale: As Noted		Phone: 303-972-9112 FAX: 303-972-9114	Revised:
Unit Information Unit Leader Initials		Region 6 RLB	Void:
FELSBURG HOLT & ULLEVIG 6300 South Syracuse Way, Centennial, CO 80111			

I-25/SANTA FE INTERCHANGE	Project No./Code		
I-25 MAINLINE PROFILE	IM 0254-394		
Designer: SPG	Structure Numbers	16311	
Detailer: SYS			
Sheet Subset: PROFILE	Subset Sheets: IPR-1 of 7	Sheet Number 267	

Stan 12:58:21 PM K:\08276\16311\Phase 2\Design\Drawings\16311DES_PH2_I25Pro1.dgn
9/27/2010 CDOT-PDFDraftQuality_XM.pltcfg CDOT-PenTable.tbl

NOTE:
FROM STA. 617+83.97 TO STA. 641+55.10 - I-25 MAINLINE PROFILE FOR INFORMATION ONLY - SEE I-25 NORTHBOUND AND I-25 SOUTHBOUND 'OFFSET' PROFILES.

C-I25.2

C-I25.3

MATCHLINE I-25 STA. 629+00

MATCHLINE I-25 STA. 643+50

PT STA. 634+87.46

PC STA. 642+57.10

OH — E — OH — E — OH — E — OH — E — (EXISTING OVERHEAD HIGH VOLTAGE ELECTRIC WIRES)

VPI=634+00.00
EL.=5266.00'

I-25 BRIDGE OVER SANTA FE DRIVE (STR. NO. F-16-XS)

I-25 PROFILE GRADE LINE @ HCL

STA. 641+55.10 - END OF 'OFFSET' PROFILES
= STA. 164+43.91 - NB (RT) LANES
= STA. 264+66.29 - SB (LT) LANES
EL.=5238.39 @ MAINLINE HCL

High Point 631+93.15
EL.=5257.90'

SANTA FE DRIVE

EXISTING GROUND

-3.66%

VPT=640+50.00
EL.=5242.23'

EXISTING CONCRETE BOX CULVERT

V.C. = 1300.00'
K = 234
SSD = 711'
MDS = 65 MPH

APPROXIMATE GROUNDWATER

I-25 MAINLINE PROFILE

APPROXIMATE BEDROCK

| | | |

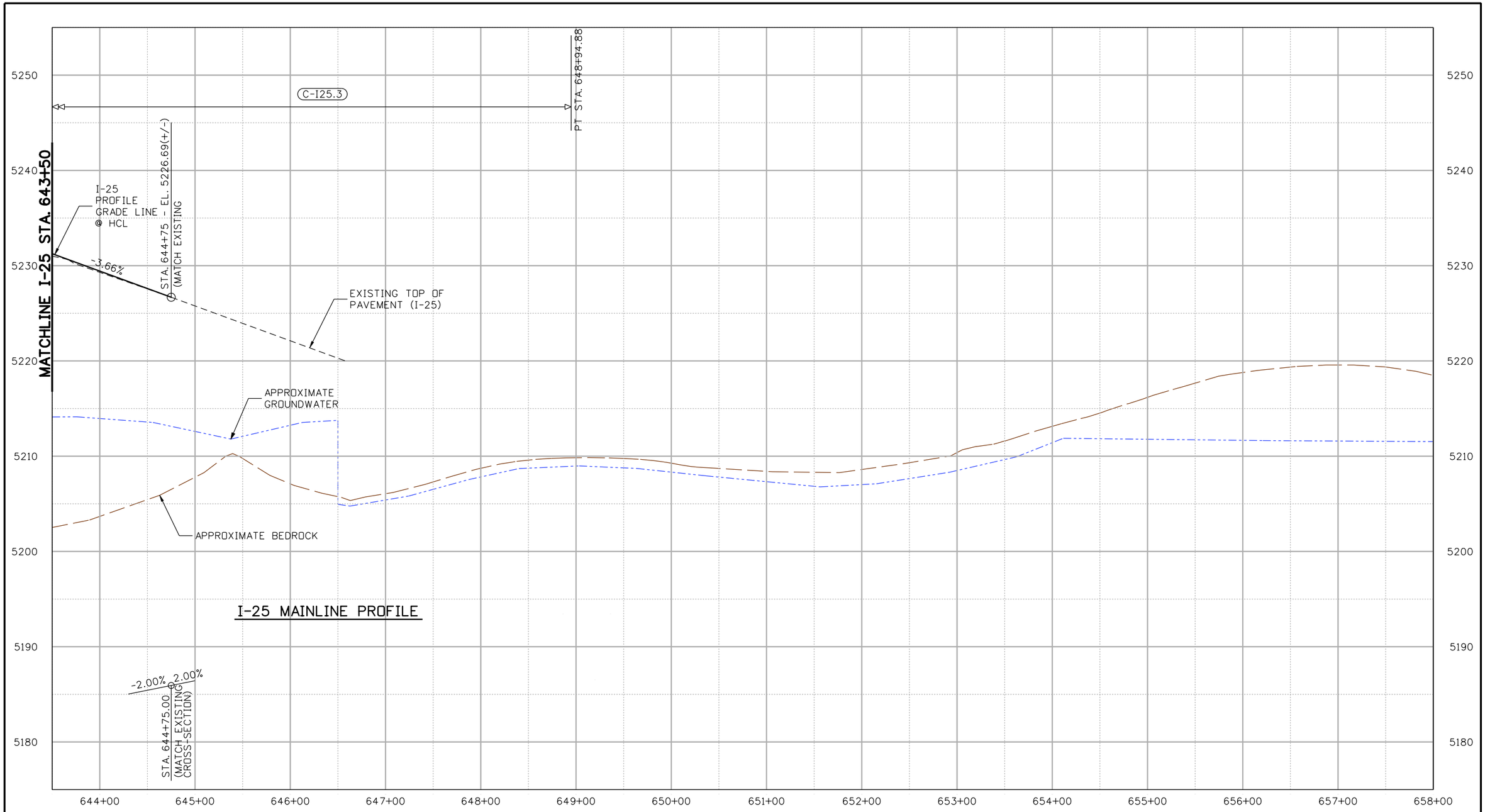

SCALE: 1"=100' HORIZ.
1"=10' VERT.

Print Date: 9/27/2010
File Name: 16311DES_PH2_I25Pro3.dgn
Horiz. Scale: 1:100 Vert. Scale: As Noted
Unit Information Unit Leader Initials

FELSBURG HOLT & ULLEVIG 6300 South Syracuse Way Centennial, CO 80111

Sheet Revisions		
Date:	Comments	Init.

Colorado Department of Transportation
DEPARTMENT OF TRANSPORTATION
2000 South Holly Street
Denver, CO 80222
Phone: 303-972-9112 FAX: 303-972-9114
Region 6 RLB

As Constructed
No Revisions:
Revised:
Void:

I-25/SANTA FE INTERCHANGE
I-25 MAINLINE PROFILE

Designer:	SPG	Structure Numbers	
Detailer:	SYS		
Sheet Subset:	PROFILE	Subset Sheets: IPR-3 of 7	

Project No./Code
IM 0254-394
16311
Sheet Number 269

Stan 12:58:26 PM K:\08276\16311\Phase 2\Design\Drawings\16311DES_PH2_I25Pro3.dgn
9/27/2010 CDOT-PDFDraftQuality_XM.pltcfg CDOT-PenTable.tbl

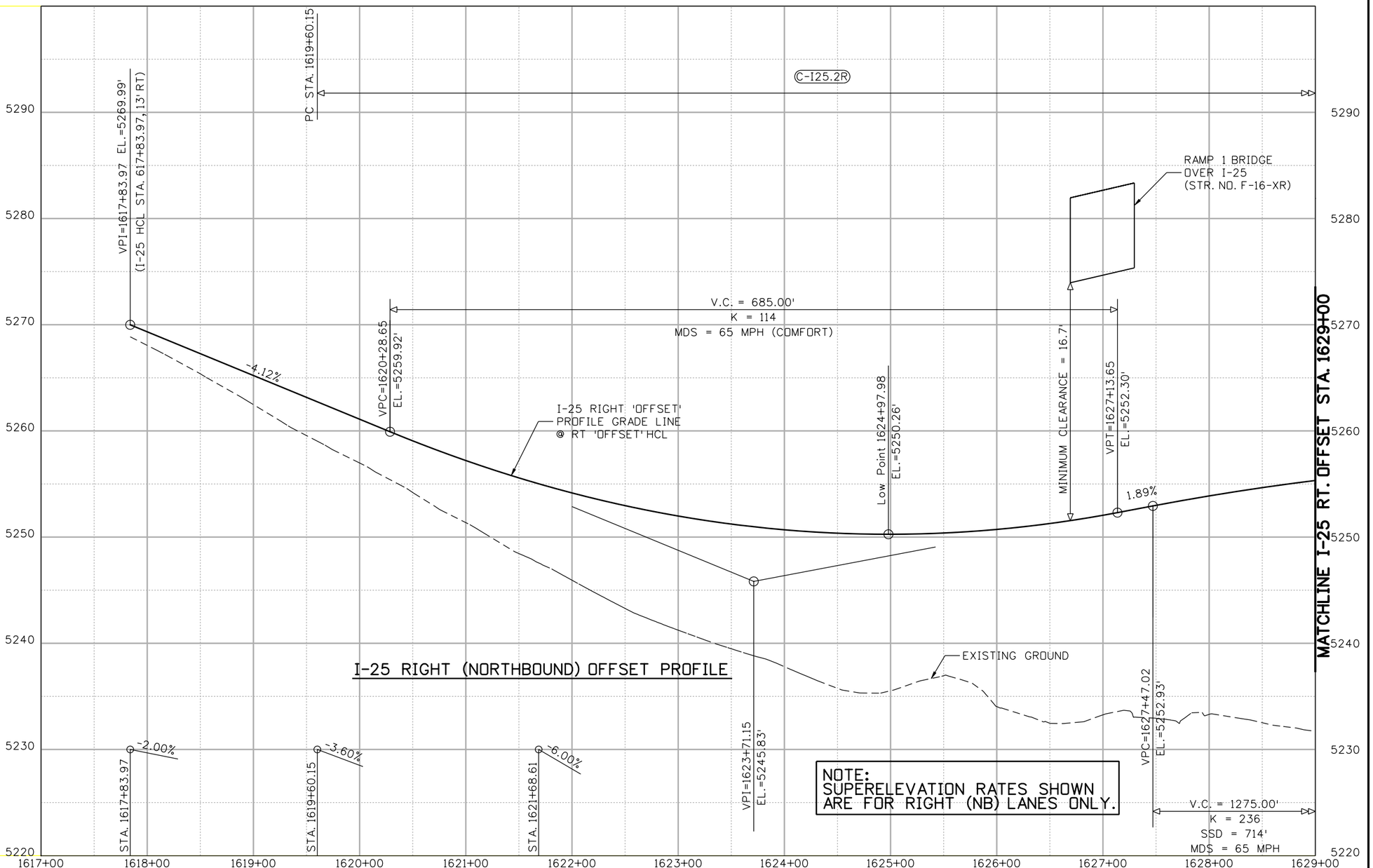

SCALE: 1"=100' HORIZ.
1"=10' VERT.

Stan 12:58:28 9/27/2010 PM K:\08276\16311\Phase 2\Design\Drawings\16311DES_PH2_I25Pro4.dgn CDOT-PDFDraftQuality_XM.pltcfg CDOT-PenTable.tbl

Print Date: 9/27/2010	Sheet Revisions			Colorado Department of Transportation	As Constructed
File Name: 16311DES_PH2_I25Pro4.dgn	Date:	Comments	Init.	2000 South Holly Street Denver, CO 80222 Phone: 303-972-9112 FAX: 303-972-9114	No Revisions:
Horiz. Scale: 1:100 Vert. Scale: As Noted				Region 6 RLB	Revised:
Unit Information Unit Leader Initials					Void:
FELSBURG HOLT & ULLEVIG 6300 South Syracuse Way Centennial, CO 80111					

I-25/SANTA FE INTERCHANGE			Project No./Code
I-25 RIGHT (NB) OFFSET PROFILE			IM 0254-394
Designer: SPG	Structure Numbers		16311
Detailer: SYS			
Sheet Subset: PROFILE	Subset Sheets: IPR-4 of 7		Sheet Number 270

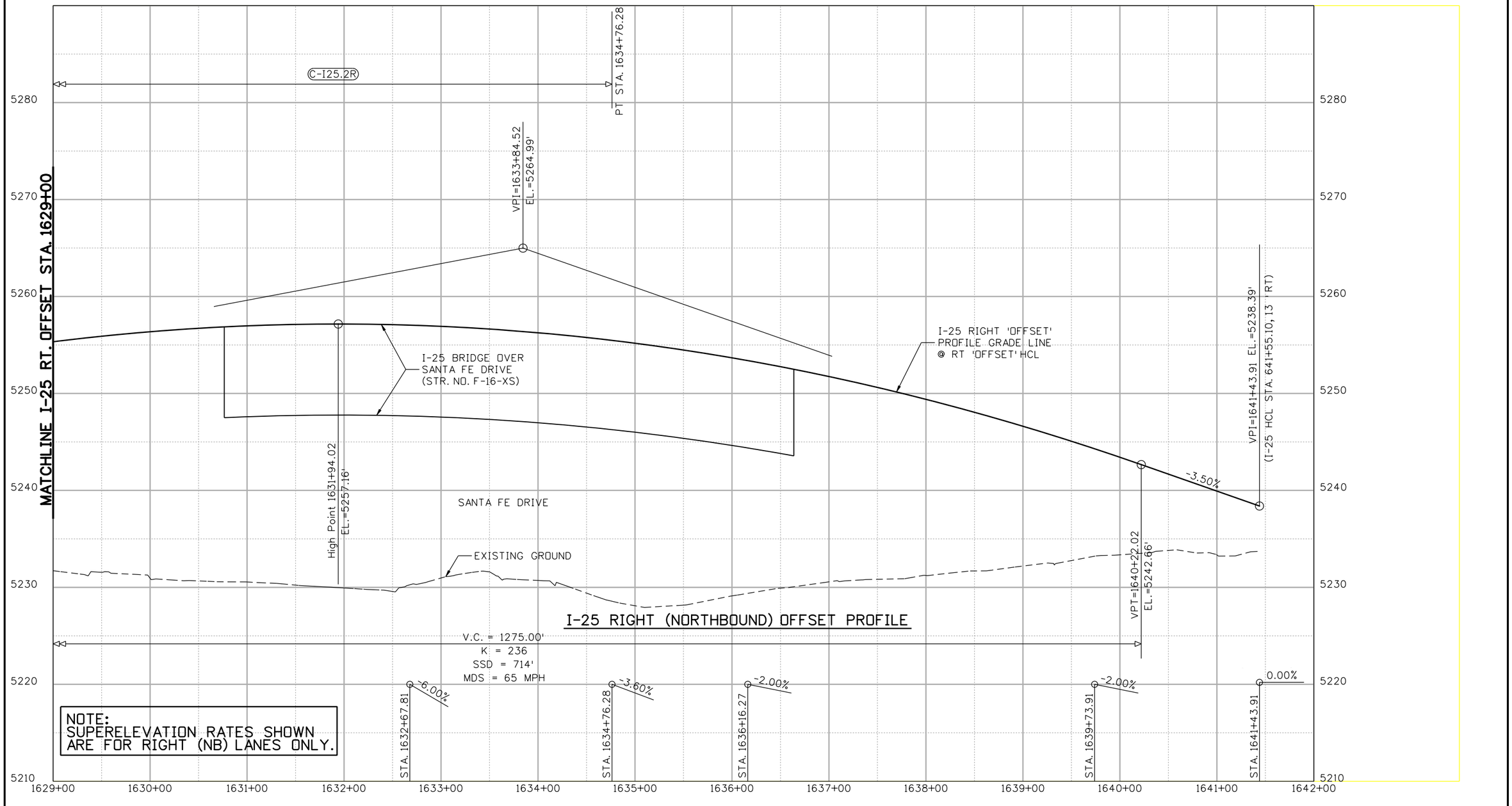

NOTE:
SUPERELEVATION RATES SHOWN ARE FOR RIGHT (NB) LANES ONLY.

SCALE: 1"=100' HORIZ.
1"=10' VERT.

Print Date: 9/27/2010	Sheet Revisions			Colorado Department of Transportation	As Constructed
File Name: 16311DES_PH2_I25Pro5.dgn	Date:	Comments	Init.	2000 South Holly Street	No Revisions:
Horiz. Scale: 1:100 Vert. Scale: As Noted				Denver, CO 80222	Revised:
Unit Information Unit Leader Initials				Phone: 303-972-9112 FAX: 303-972-9114	Void:
FELSBURG HOLT & ULLEVIG 6300 South Syracuse Way Centennial, CO 80111				Region 6 RLB	

I-25/SANTA FE INTERCHANGE			
I-25 RIGHT (NB) OFFSET PROFILE			
Designer: SPG	Structure Numbers		
Detailer: SYS			
Sheet Subset: PROFILE	Subset Sheets: IPR-5 of 7		

Project No./Code
IM 0254-394
16311
Sheet Number 271

Stan 12:58:31 PM K:\08276\16311\Phase 2\Design\Drawings\16311DES_PH2_I25Pro5.dgn
9/27/2010 CDOT-PDFDraftQuality_XM.pltcfg CDOT-PenTable.tbl

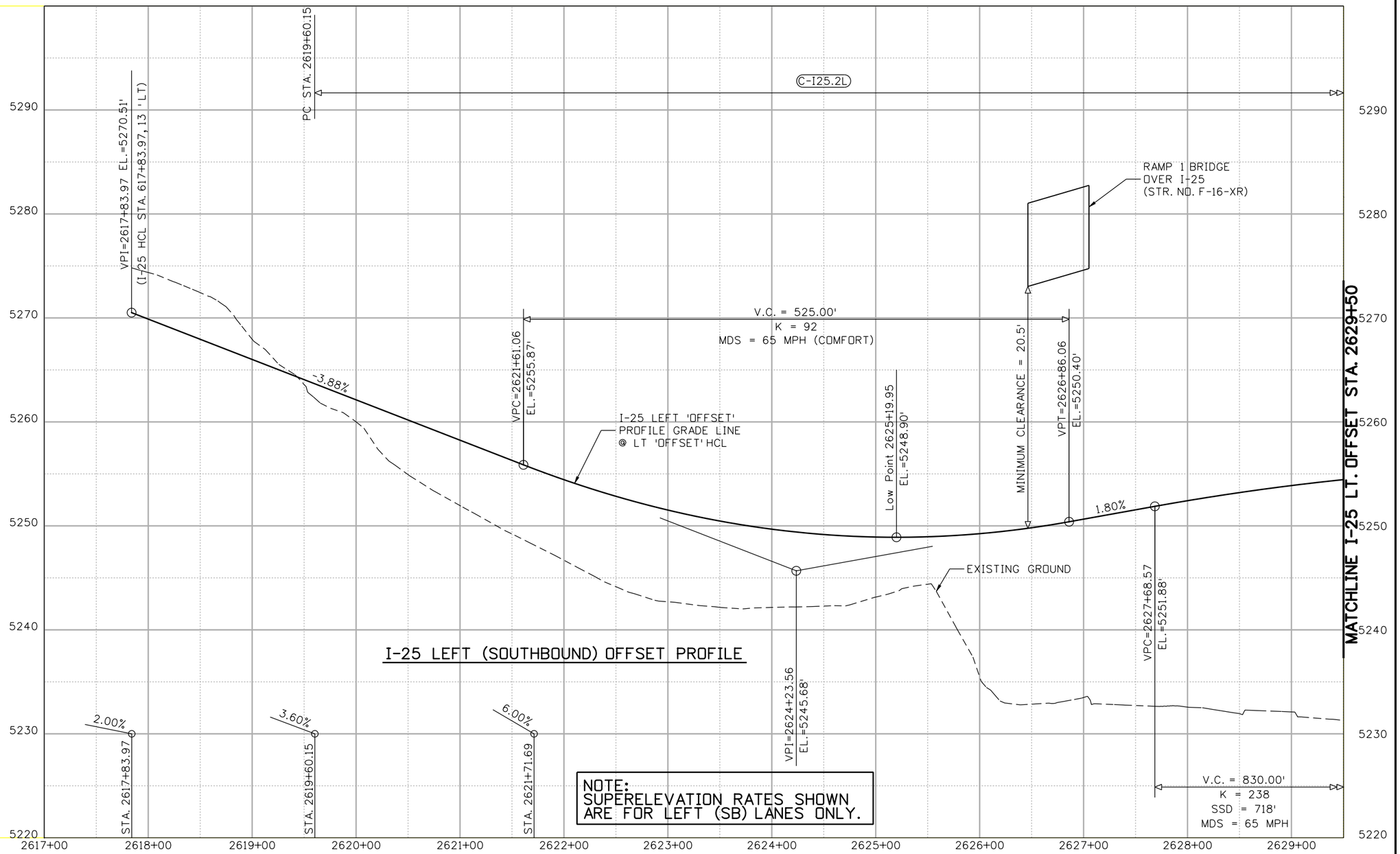

SCALE: 1"=100' HORIZ.
1"=10' VERT.

Print Date: 9/27/2010
File Name: 16311DES_PH2_I25Pro6.dgn
Horiz. Scale: 1:100 Vert. Scale: As Noted
Unit Information Unit Leader Initials

FELSBURG HOLT & ULLEVIG
6300 South Syracuse Way
Centennial, CO 80111

Sheet Revisions		
Date:	Comments	Init.

Colorado Department of Transportation
DEPARTMENT OF TRANSPORTATION
2000 South Holly Street
Denver, CO 80222
Phone: 303-972-9112 FAX: 303-972-9114
Region 6 RLB

As Constructed
No Revisions:
Revised:
Void:

I-25/SANTA FE INTERCHANGE
I-25 LEFT (SB) OFFSET PROFILE

Designer: SPG
Detailer: SYS
Sheet Subset: PROFILE
Structure Numbers
Subset Sheets: IPR-6 of 7

Project No./Code
IM 0254-394
16311
Sheet Number 272

Stan 12:58:33 PM K:\08276\16311\Phase 2\Design\Drawings\16311DES_PH2_I25Pro6.dgn
9/27/2010 CDOT-PDFDraftQuality_XM.pltcfg CDOT-PenTable.tbl

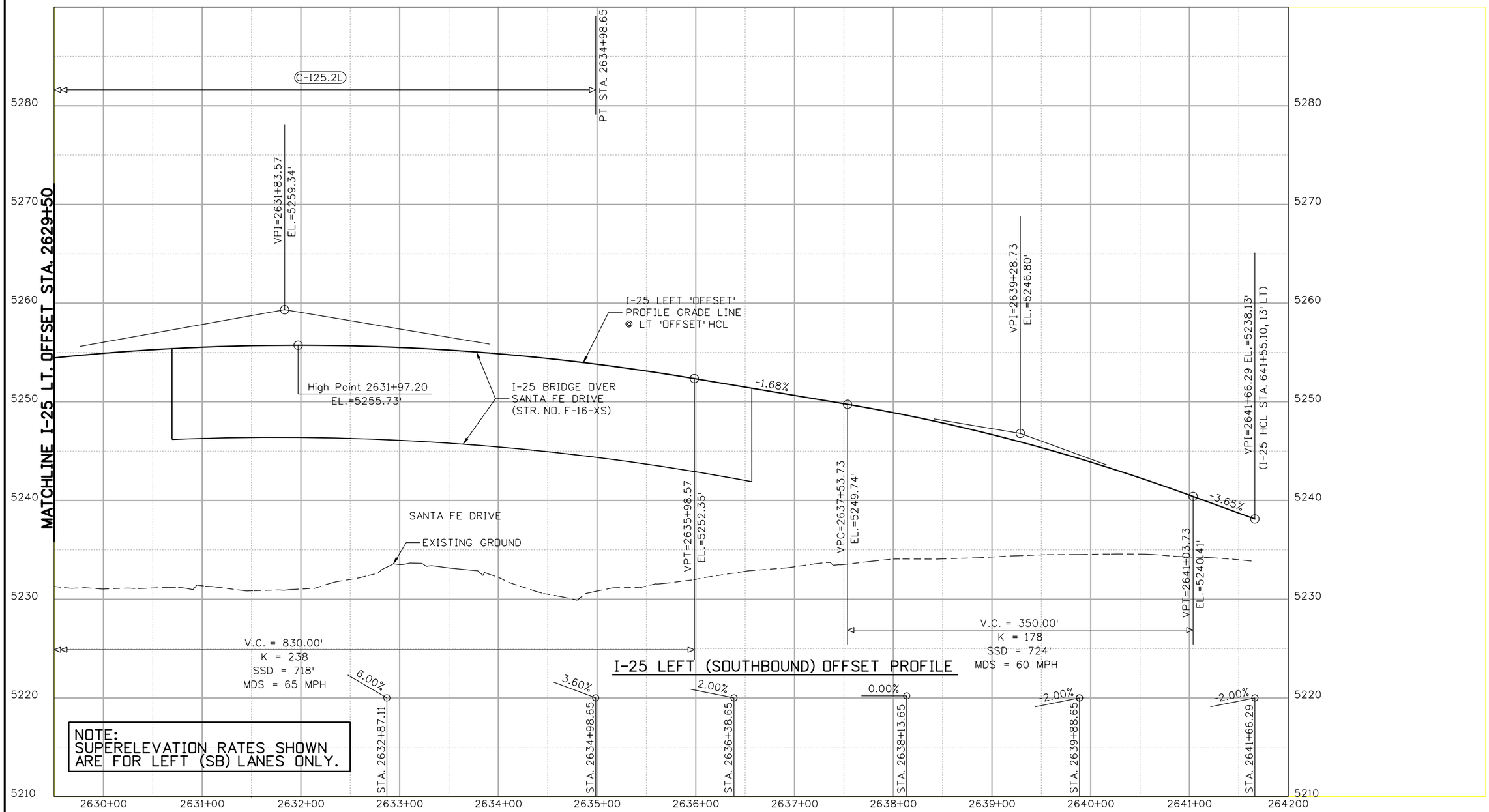

I-25 LEFT (SOUTHBOUND) OFFSET PROFILE

NOTE:
SUPERELEVATION RATES SHOWN ARE FOR LEFT (SB) LANES ONLY.

SCALE: 1"=100' HORIZ.
1"=10' VERT.

Print Date: 9/27/2010
File Name: 16311DES_PH2_I25Pro7.dgn
Horiz. Scale: 1:100 Vert. Scale: As Noted
Unit Information Unit Leader Initials

FELSBURG HOLT & ULLEVIG 6300 South Syracuse Way Centennial, CO 80111

0000

Sheet Revisions		
Date:	Comments	Init.

Colorado Department of Transportation
DOT DEPARTMENT OF TRANSPORTATION
2000 South Holly Street
Denver, CO 80222
Phone: 303-972-9112 FAX: 303-972-9114
Region 6 RLB

As Constructed
No Revisions:
Revised:
Void:

I-25/SANTA FE INTERCHANGE
I-25 LEFT (SB) OFFSET PROFILE

Designer: SPG
Detailer: SYS
Sheet Subset: PROFILE
Structure Numbers:
Subset Sheets: IPR-7 of 7

Project No./Code
IM 0254-394
16311
Sheet Number 273

Stan 12:58:36 PM K:\08276\16311\Phase 2\Design\Drawings\16311DES_PH2_I25Pro7.dgn
9/27/2010 CDOT-PDFDraftQuality_XM.pltcfg CDOT-PenTable.tbl

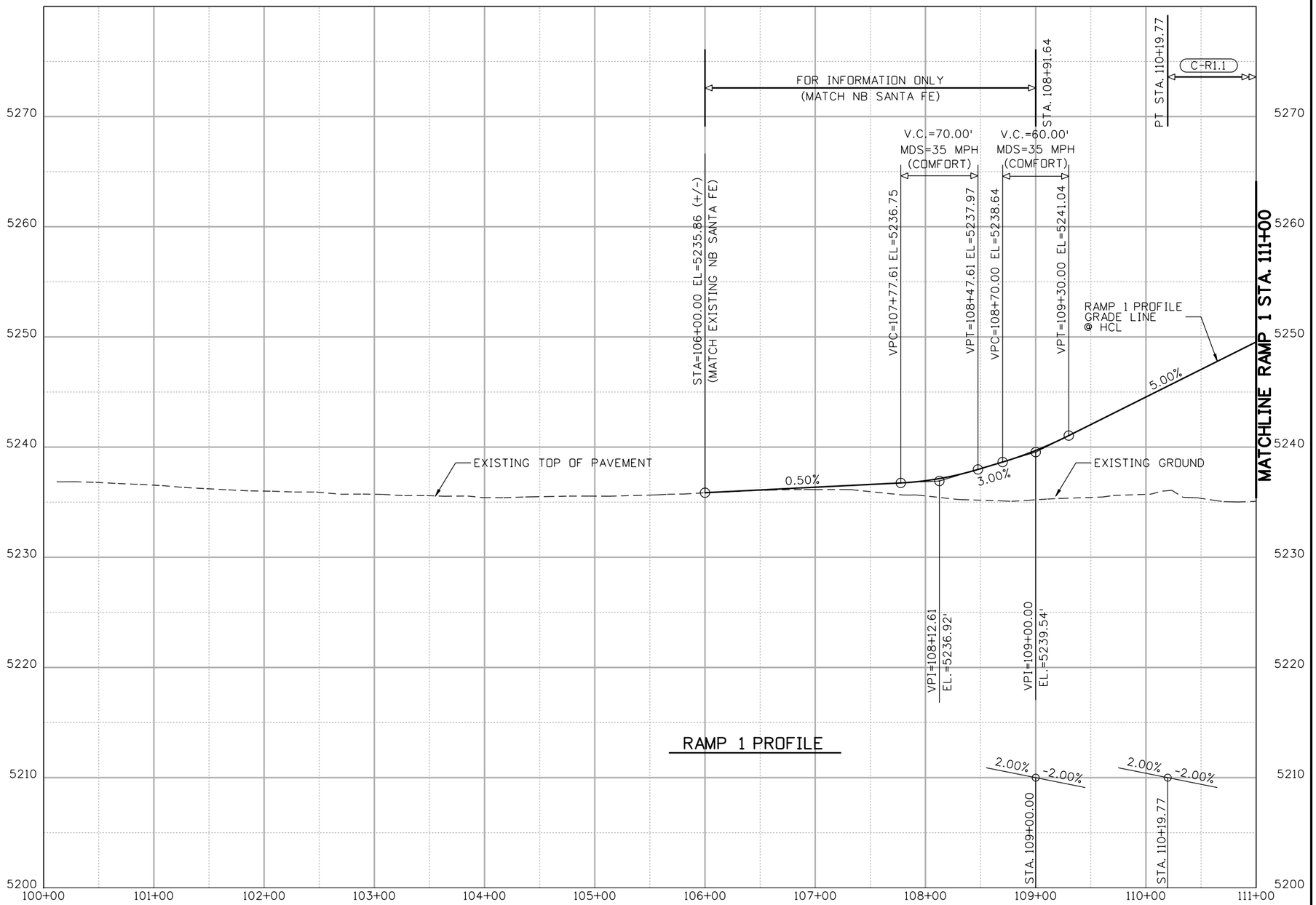

SCALE: 1"=100' HORIZ.
1"=10' VERT.

Print Date: 9/27/2010	Sheet Revisions	Colorado Department of Transportation	As Constructed
File Name: 16311DES_PH2_Ramp1Pro1.dgn	Date: / Comments / Init.	2000 South Holly Street, Denver, CO 80222	No Revisions:
Horiz. Scale: 1:100 Vert. Scale: As Noted		Phone: 303-972-9112 FAX: 303-972-9114	Revised:
Unit Information Unit Leader Initials		Region 6 RLB	Void:
FELSBURG HOLT & ULLEVIG 6300 South Syracuse Way Centennial, CO 80111			

I-25/SANTA FE INTERCHANGE			Project No./Code
RAMP 1 PROFILE			IM 0254-394
Designer: SPG	Structure Numbers		16311
Detailer: SYS			
Sheet Subset: PROFILE	Subset Sheets: R1PR-1 of 3		Sheet Number 274

Stan 12:58:38 PM K:\08276\16311\Phase 2\Design\Drawings\16311DES_PH2_Ramp1Pro1.dgn
9/27/2010 CDOT-PDFDraftQuality_XM.pltcfg CDOT-PenTable.tbl

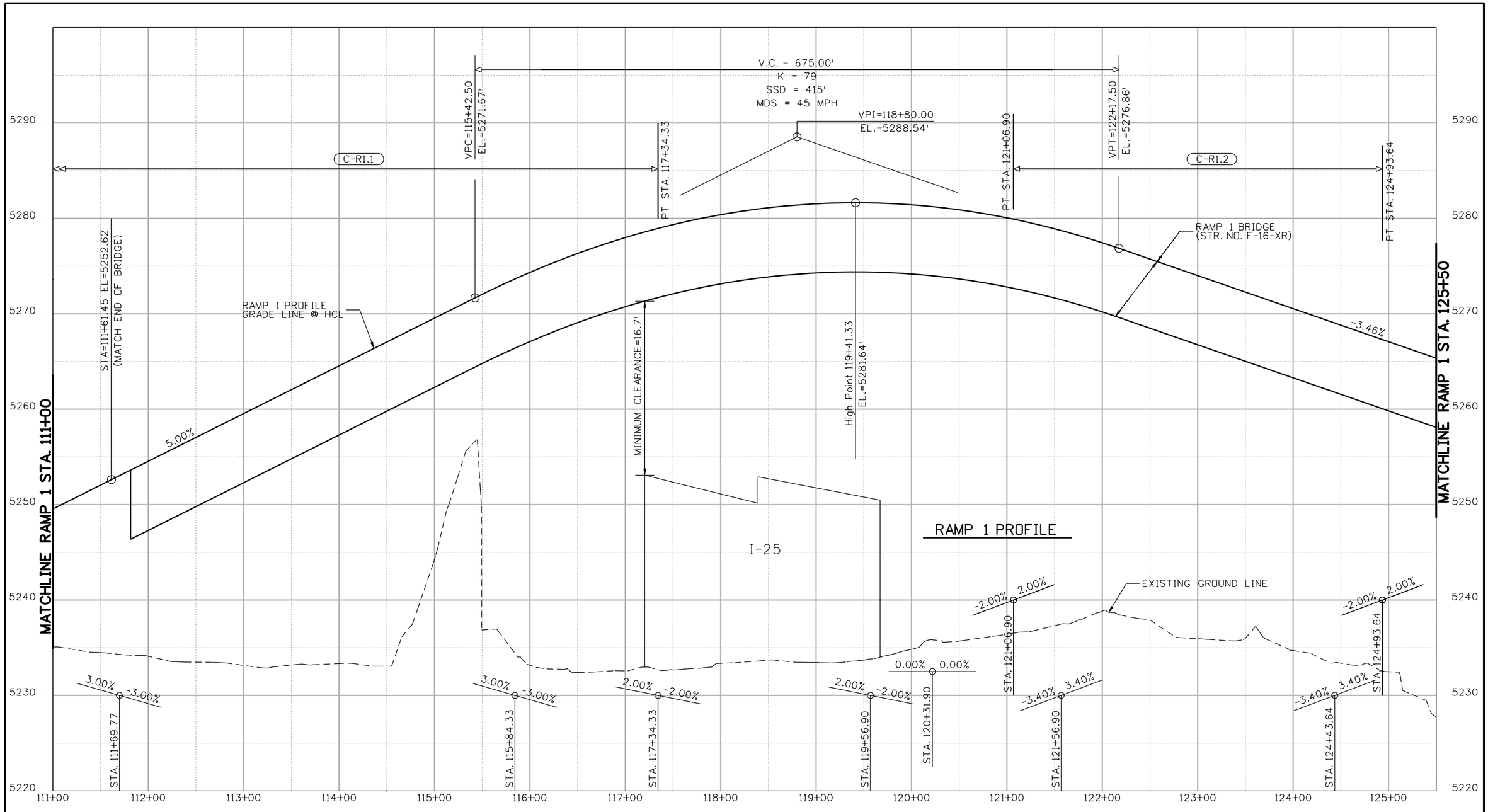

SCALE: 1"=100' HORIZ.
1"=10' VERT.

Print Date: 9/27/2010	Sheet Revisions			Colorado Department of Transportation	As Constructed
File Name: 16311DES_PH2_Ramp1Pro2.dgn	Date:	Comments	Init.	2000 South Holly Street Denver, CO 80222 Phone: 303-972-9112 FAX: 303-972-9114	No Revisions:
Horiz. Scale: 1:100 Vert. Scale: As Noted				Region 6 RLB	Revised:
Unit Information Unit Leader Initials					Void:
FELSBURG HOLT & ULLEVIG 6300 South Syracuse Way Centennial, CO 80111					

I-25/SANTA FE INTERCHANGE RAMP 1 PROFILE			Project No./Code
Designer: SPG	Structure Numbers		IM 0254-394
Detailer: SYS			16311
Sheet Subset: PROFILE	Subset Sheets: R1PR-2of 3		Sheet Number 275

Stan 12:58:41 PM K:\08276\16311\Phase 2\Design\Drawings\16311DES_PH2_Ramp1Pro2.dgn
9/27/2010 CDOT-PDFDraftQuality_XM.pltcfg CDOT-PenTable.tbl

MATCHLINE RAMP 1 STA. 125+50

OH — — E — — OH — — E — —
OH — — E — — OH — — E — —
OH
(OVERHEAD HIGH VOLTAGE POWER LINES)

-3.46%

RAMP 1 BRIDGE
(STR. NO. F-16-XR)

STA=129+60.61 EL=5251.13
(MATCH END OF BRIDGE)

RAMP 1 PROFILE
GRADE LINE @ HCL

VPI=134+00.00
EL.=5235.92'

STA=135+99.02 EL=5228.44
(MATCH EXISTING NB I-25)

EXISTING GROUND

SANTA FE DRIVE

-3.76%

EXISTING TOP
OF PAVEMENT

EXISTING CONCRETE
BOX CULVERT

VPC=132+50.00
EL.=5241.11'

VPT=135+50.00
EL.=5230.28'

V.C. = 300.00'
K = 1011
SSD = 3787'
MDS = 55 MPH

0.00%
0.00%

STA. 125+68.64

2.00%
-2.00%

STA. 126+43.64

2.00%
-2.00%

STA. 135+99.02
(MATCH EXISTING)

RAMP 1 PROFILE

5270
5260
5250
5240
5230
5220
5210
5200

126+00 127+00 128+00 129+00 130+00 131+00 132+00 133+00 134+00 135+00 136+00 137+00

SCALE: 1"=100' HORIZ.
1"=10' VERT.

Print Date: 9/27/2010
File Name: 16311DES_PH2_Ramp1Pro3.dgn
Horiz. Scale: 1:100 Vert. Scale: As Noted
Unit Information Unit Leader Initials

FELSBURG HOLT & ULLEVIG 6300 South Syracuse Way Centennial, CO 80111

Sheet Revisions		
Date:	Comments	Init.

Colorado Department of Transportation
DEPARTMENT OF TRANSPORTATION
2000 South Holly Street
Denver, CO 80222
Phone: 303-972-9112 FAX: 303-972-9114
Region 6 RLB

As Constructed
No Revisions:
Revised:
Void:

I-25/SANTA FE INTERCHANGE
RAMP 1 PROFILE

Designer: SPG
Detailer: SYS
Sheet Subset: PROFILE
Structure Numbers:
Subset Sheets: R1PR-3of 3

Project No./Code
IM 0254-394
16311
Sheet Number 276

Stan 12:58:43 PM K:\08276\16311\Phase 2\Design\Drawings\16311DES_PH2_Ramp1Pro3.dgn
9/27/2010 CDOT-PDFDraftQuality_XM.pltcfg CDOT-PenTable.tbl

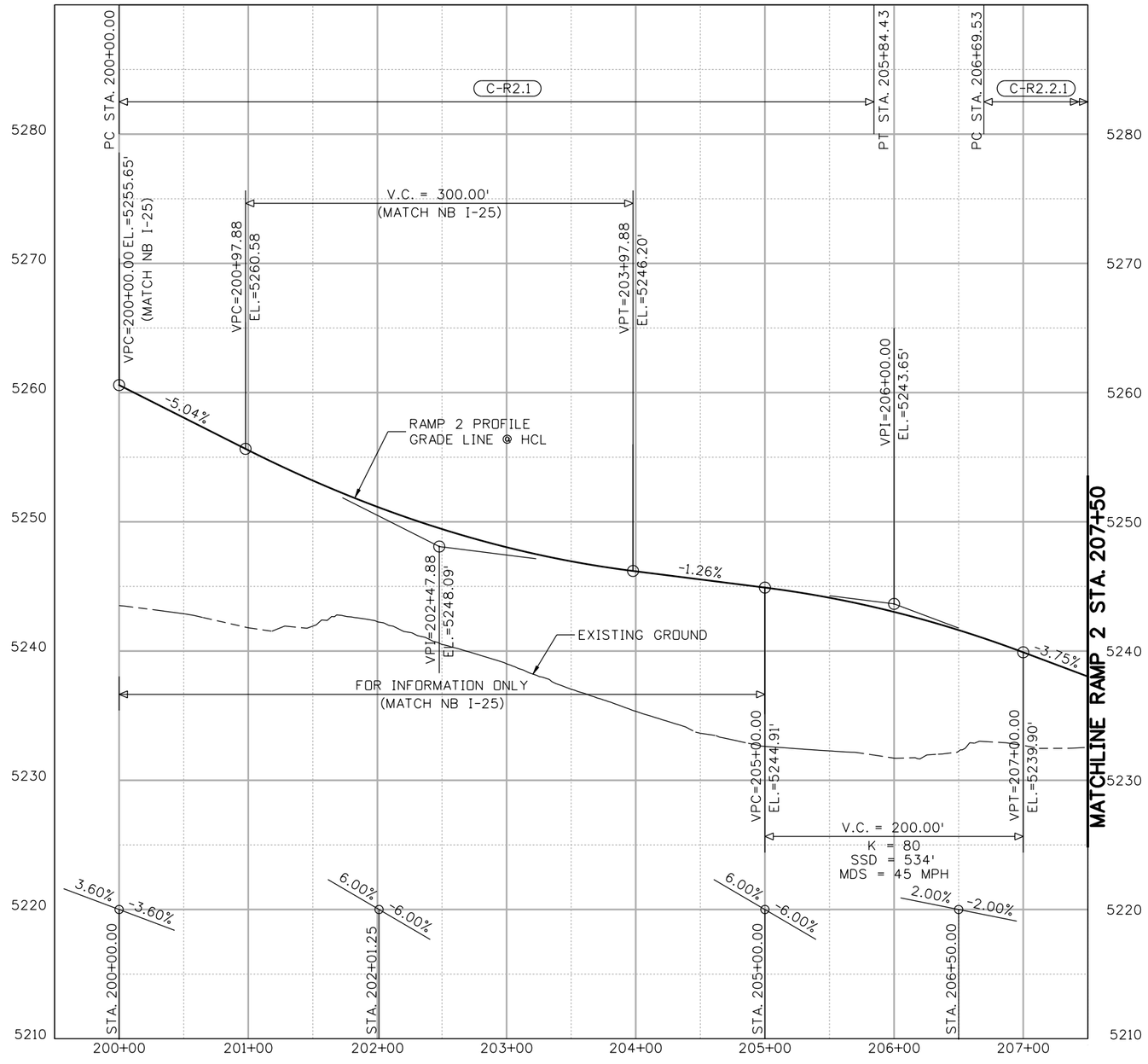

RAMP 2 PROFILE

SCALE: 1"=100' HORIZ.
1"=10' VERT.

Print Date: 9/27/2010		Sheet Revisions			Colorado Department of Transportation	As Constructed	I-25/SANTA FE INTERCHANGE	Project No./Code
File Name: 16311DES_PH2_Ramp2Pro1.dgn		Date:	Comments	Init.	2000 South Holly Street Denver, CO 80222 Phone: 303-972-9112 FAX: 303-972-9114	No Revisions:	RAMP 2 PROFILE	IM 0254-394
Horiz. Scale: 1:100 Vert. Scale: As Noted						Revised:	Designer: SPG / Structure Numbers	16311
Unit Information Unit Leader Initials					Region 6 RLB	Void:	Detailer: SYS / Sheet Subset: PROFILE / Subset Sheets: R2PR-1of 2	Sheet Number 277
FELSBURG HOLT & ULLEVIG 6300 South Syracuse Way Centennial, CO 80111								

Stan 12:58:46 PM K:\08276\16311\Phase 2\Design\Drawings\16311DES_PH2_Ramp2Pro1.dgn
9/27/2010 CDOT-PDFDraftQuality_XM.pltcfg CDOT-PenTable.tbl

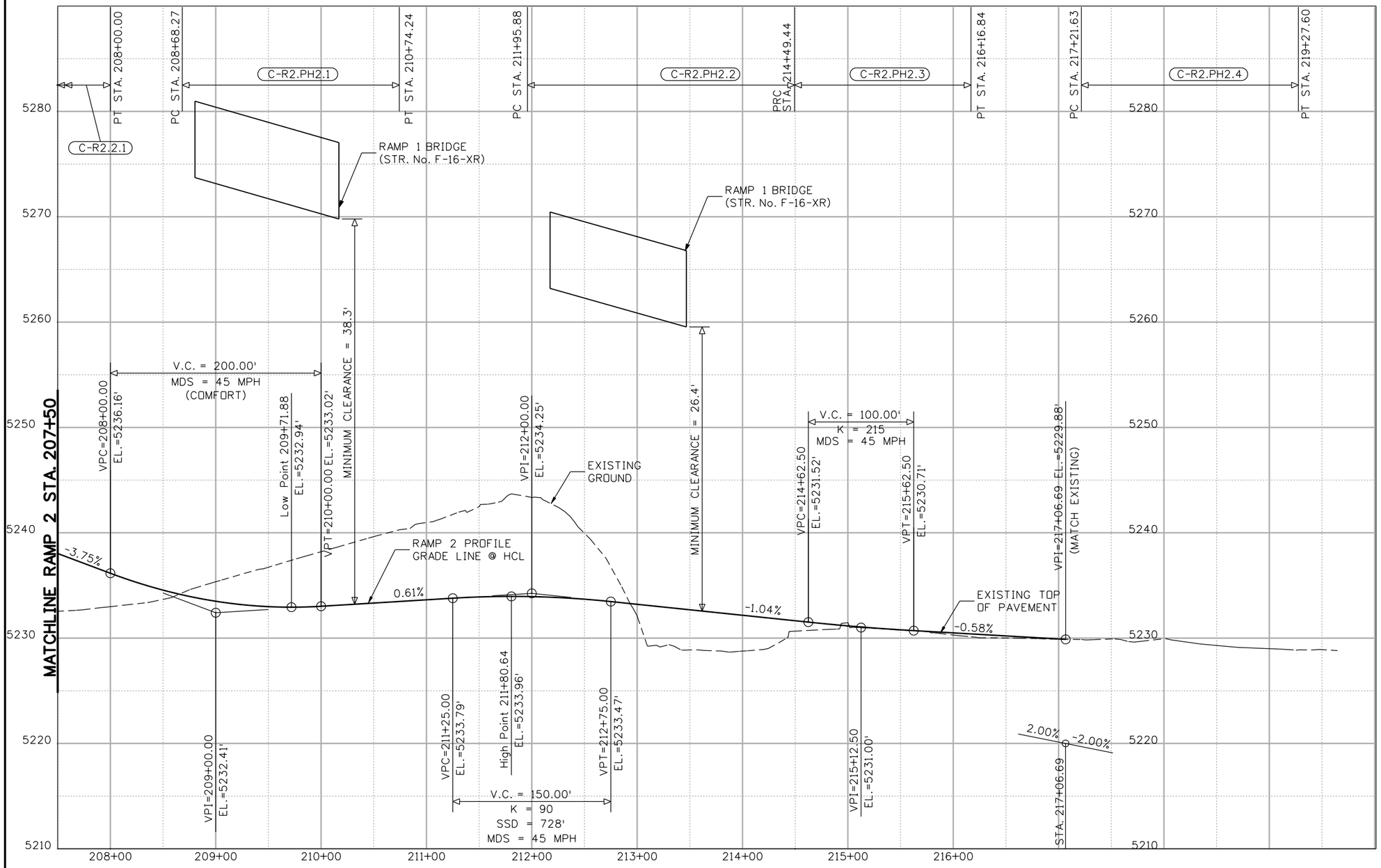

RAMP 2 PROFILE

SCALE: 1"=100' HORIZ.
1"=10' VERT.

Print Date: 9/27/2010
File Name: 16311DES_PH2_Ramp2Pro2.dgn
Horiz. Scale: 1:100 Vert. Scale: As Noted
Unit Information Unit Leader Initials

FELSBURG HOLT & ULLEVIG 6300 South Syracuse Way Centennial, CO 80111

0000

Sheet Revisions		
Date:	Comments	Init.

Colorado Department of Transportation
DEPARTMENT OF TRANSPORTATION
2000 South Holly Street
Denver, CO 80222
Phone: 303-972-9112 FAX: 303-972-9114
Region 6 RLB

As Constructed
No Revisions:
Revised:
Void:

I-25/SANTA FE INTERCHANGE
RAMP 2 PROFILE

Designer: SPG
Detailer: SYS
Sheet Subset: PROFILE
Structure Numbers:
Subset Sheets:R2PR-2of 2

Project No./Code
IM 0254-394
16311
Sheet Number 278

Stan 12:58:48 PM K:\08276\16311\Phase 2\Design\Drawings\16311DES_PH2_Ramp2Pro2.dgn
9/27/2010 CDOT-PDFDraftQuality_XM.pltcfg CDOT-PenTable.tbl

FOR INFORMATION ONLY
(MATCH SB I-25)

STA=300+00.00, EL=5273.50
(MATCH SB I-25)

V.C. = 150.00'
K = 165
MDS = 55 MPH

VPC=301+05.72
EL.=5269.85'

VPT=302+55.72
EL.=5265.35'

STA. 303+02.72

VPI=303+57.50
EL.=5262.76'

-3.45%

-2.55%

-6.50%

-3.57%

0.50%

EXISTING
GROUND

RAMP 3 PROFILE
GRADE LINE @ HCL

VPI=301+80.72
EL.=5267.26'

VPC=303+00.00
EL.=5264.22'

VPT=304+15.00
EL.=5259.02'

V.C. = 115.00'
K = 29
SSD = 331'
MDS = 35 MPH

V.C. = 100.00'
MDS = 35 MPH
(COMFORT)

VPC=306+88.11
EL.=5241.27'

VPT=307+88.11
EL.=5236.23'

V.C. = 50.00'
MDS = 20 MPH
(COMFORT)

VPC=308+28.10
EL.=5234.80'

Low Point STA 308+71.96, EL=5234.02

VPT=308+78.10, EL=5234.04

VPI=309+80.75, EL=5234.55
(MATCH NB SANTA FE)

VPI=307+38.11
EL.=5238.02'

VPI=308+53.10
EL.=5233.91'

1.00% -2.00%

1.00% -2.87%

1.00% -3.76%

2.00% -2.00%

1.00% -2.46%

1.00% -3.28%

1.00% -4.30%

2.00% -2.00%

2.00% -2.00%

STA. 300+58.97

STA. 301+54.96

STA. 302+50.00

STA. 300+00.00

STA. 301+09.91

STA. 302+00.00

STA. 303+00.00

STA. 304+00.00

STA. 309+80.75

5280
5270
5260
5250
5240
5230
5220
5210

300+00
301+00
302+00
303+00
304+00
305+00
306+00
307+00
308+00
309+00
310+00

RAMP 3 PROFILE

SCALE: 1"=100' HORIZ.
1"=10' VERT.

Print Date: 9/27/2010
File Name: 16311DES_PH2_Ramp3Pro1.dgn
Horiz. Scale: 1:100 Vert. Scale: As Noted
Unit Information Unit Leader Initials

FELSBURG HOLT & ULLEVIG 6300 South Syracuse Way Centennial, CO 80111

Sheet Revisions		
Date:	Comments	Init.

Colorado Department of Transportation
DEPARTMENT OF TRANSPORTATION
2000 South Holly Street
Denver, CO 80222
Phone: 303-972-9112 FAX: 303-972-9114
Region 6 RLB

As Constructed
No Revisions:
Revised:
Void:

I-25/SANTA FE INTERCHANGE
RAMP 3 PROFILE

Designer: SPG
Detailer: SYS
Sheet Subset: PROFILE
Structure Numbers:
Subset Sheets: R3PR-1of 1

Project No./Code
IM 0254-394
16311
Sheet Number 279

Stan 12:58:51 PM K:\08276\16311\Phase 2\Design\Drawings\16311DES_PH2_Ramp3Pro1.dgn
9/27/2010 CDOT-PDFDraftQuality_XM.pltcfg CDOT-PenTable.tbl

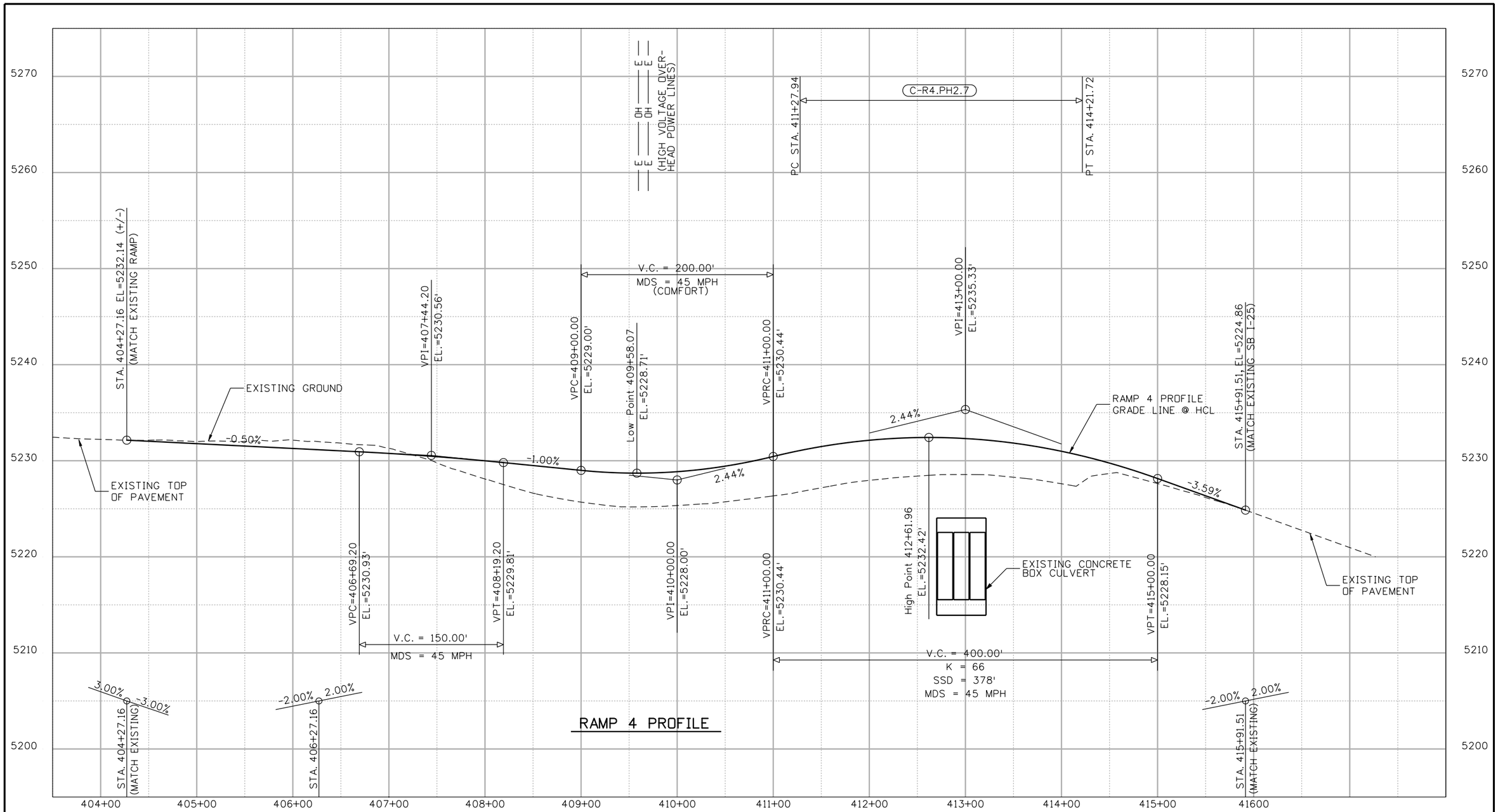

RAMP 4 PROFILE

SCALE: 1"=100' HORIZ.
1"=10' VERT.

Print Date: 9/27/2010
File Name: 16311DES_PH2_Ramp4Pro1.dgn
Horiz. Scale: 1:100 Vert. Scale: As Noted
Unit Information Unit Leader Initials

FELSBURG HOLT & ULLEVIG 6300 South Syracuse Way Centennial, CO 80111

Sheet Revisions		
Date:	Comments	Init.

Colorado Department of Transportation
DEPARTMENT OF TRANSPORTATION
2000 South Holly Street
Denver, CO 80222
Phone: 303-972-9112 FAX: 303-972-9114
Region 6 RLB

As Constructed
No Revisions:
Revised:
Void:

I-25/SANTA FE INTERCHANGE
RAMP 4 PROFILE

Designer: SPG
Detailer: SYS
Sheet Subset: PROFILE
Structure Numbers:
Subset Sheets: R4PR-1 of 1

Project No./Code
IM 0254-394
16311
Sheet Number 280

Stan 12:58:54 PM K:\08276\16311\Phase 2\Design\Drawings\16311DES_PH2_Ramp4Pro1.dgn
9/27/2010 CDOT-PDFDraftQuality_XM.pltcfg CDOT-PenTable.tbl

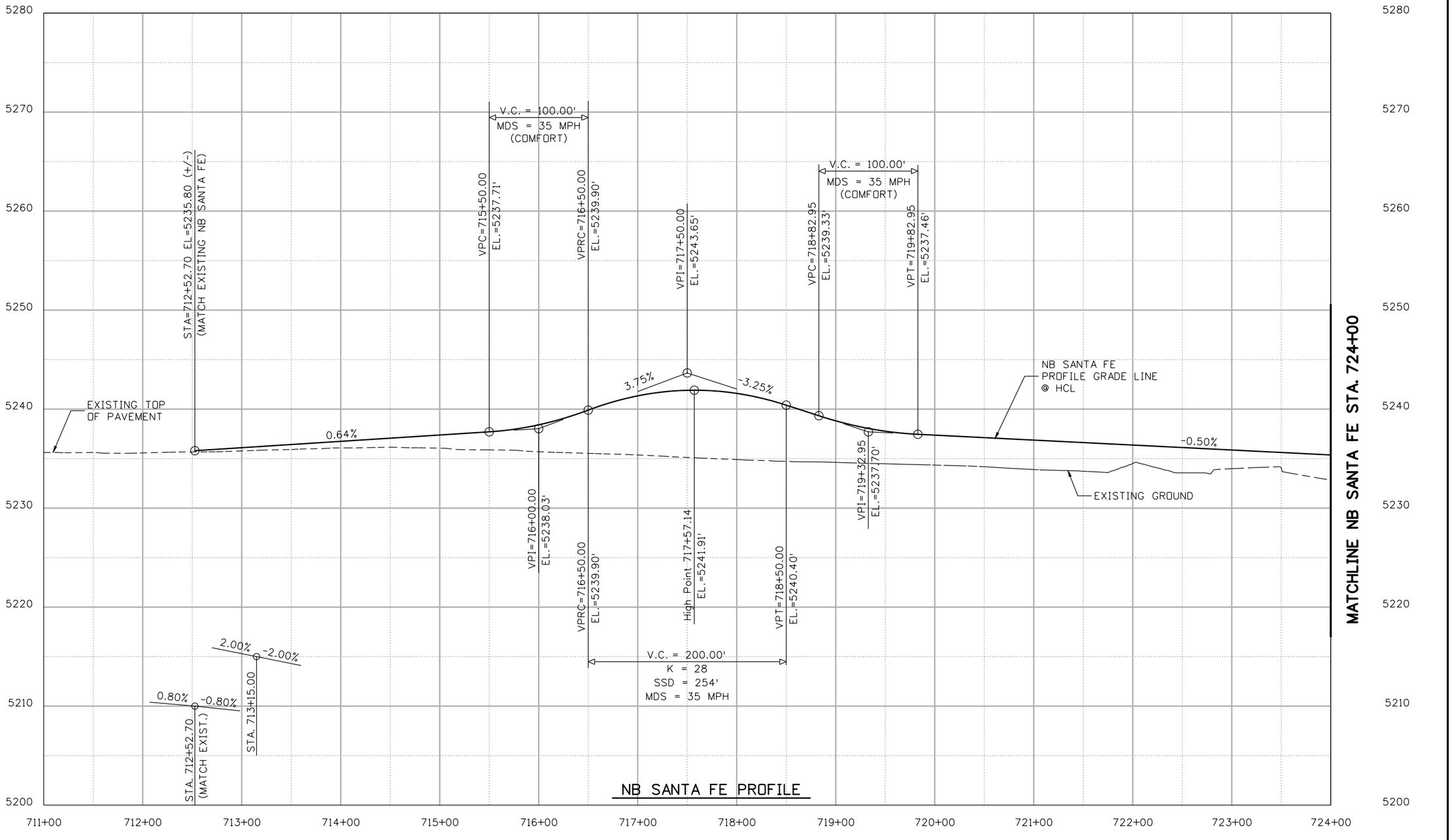

SCALE: 1"=100' HORIZ.
1"=10' VERT.

Print Date: 9/27/2010	Sheet Revisions			Colorado Department of Transportation	As Constructed
File Name: 16311DES_PH2_SantaFeNBPro1.dgn	Date:	Comments	Init.	2000 South Holly Street Denver, CO 80222 Phone: 303-972-9112 FAX: 303-972-9114	No Revisions:
Horiz. Scale: 1:100 Vert. Scale: As Noted				Region 6 RLB	Revised:
Unit Information Unit Leader Initials					Void:
FELSBURG HOLT & ULLEVIG 6300 South Syracuse Way Centennial, CO 80111					

I-25/SANTA FE INTERCHANGE			Project No./Code
NB SANTA FE PROFILE			IM 0254-394
Designer: SPG	Structure Numbers		16311
Detailer: SYS			
Sheet Subset: PROFILE	Subset Sheets: SFPR-1of 4		Sheet Number 281

Stan 12:58:57 PM K:\08276\16311\Phase 2\Design\Drawings\16311DES_PH2_SantaFeNBPro1.dgn
9/27/2010 CDOT-PDFDraftQuality_XM.pltcfg CDOT-PenTable.tbl

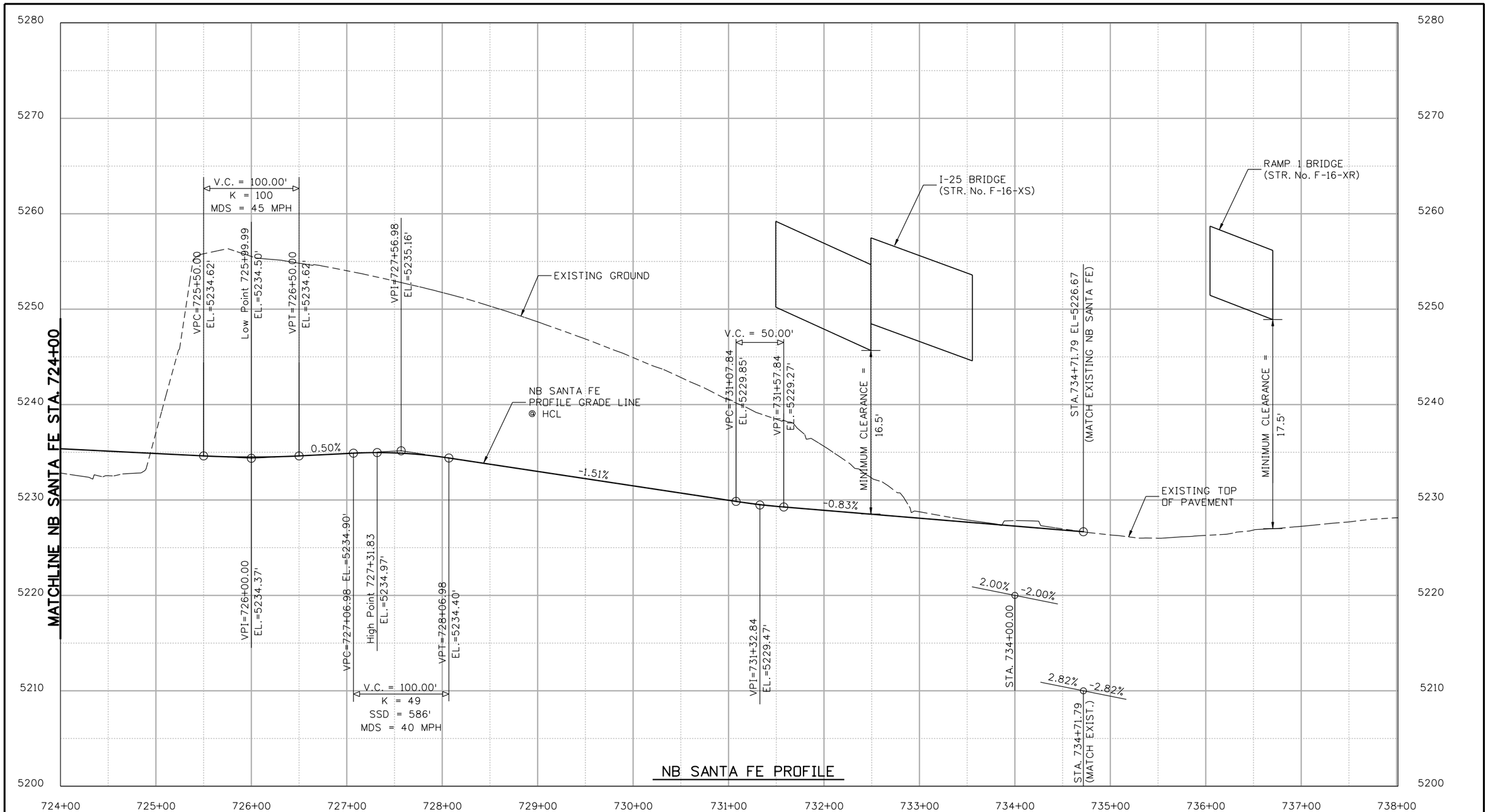

SCALE: 1"=100' HORIZ.
1"=10' VERT.

Print Date: 9/27/2010	Sheet Revisions	Colorado Department of Transportation	As Constructed
File Name: 16311DES_PH2_SantaFeNBPro2.dgn	Date: / Comments / Init.	2000 South Holly Street, Denver, CO 80222	No Revisions:
Horiz. Scale: 1:100 Vert. Scale: As Noted		Phone: 303-972-9112 FAX: 303-972-9114	Revised:
Unit Information Unit Leader Initials		Region 6 RLB	Void:
FELSBURG HOLT & ULLEVIG 6300 South Syracuse Way Centennial, CO 80111			

I-25/SANTA FE INTERCHANGE			Project No./Code
NB SANTA FE PROFILE			IM 0254-394
Designer: SPG	Structure Numbers		16311
Detailer: SYS			
Sheet Subset: PROFILE	Subset Sheets: SFPR-2 of 4		Sheet Number 282

Stan 12:59:00 PM K:\08276\16311\Phase 2\Design\Drawings\16311DES_PH2_SantaFeNBPro2.dgn
9/27/2010 CDOT-PDFDraftQuality_XM.pltcfg CDOT-PenTable.tbl

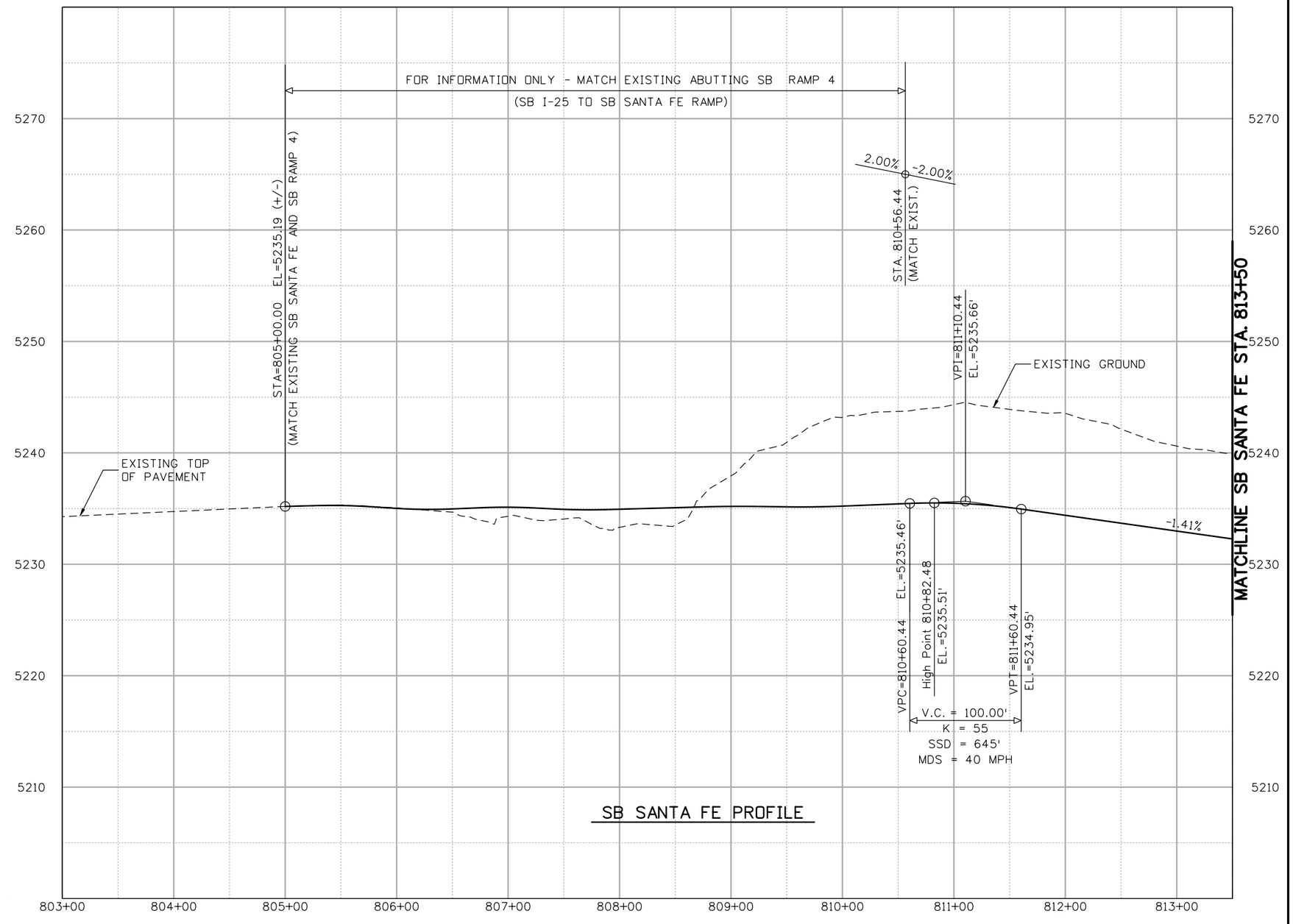

SB SANTA FE PROFILE

SCALE: 1"=100' HORIZ.
1"=10' VERT.

Print Date: 9/27/2010
File Name: 16311DES_PH2_SantaFeSBPro3.dgn
Horiz. Scale: 1:100 Vert. Scale: As Noted
Unit Information Unit Leader Initials

FELSBURG HOLT & ULLEVIG 6300 South Syracuse Way Centennial, CO 80111

Sheet Revisions		
Date:	Comments	Init.

Colorado Department of Transportation
2000 South Holly Street
Denver, CO 80222
Phone: 303-972-9112 FAX: 303-972-9114
Region 6 RLB

As Constructed
No Revisions:
Revised:
Void:

I-25/SANTA FE INTERCHANGE
SB SANTA FE PROFILE

Designer:	SPG	Structure Numbers	
Detailer:	SYS		
Sheet Subset:	PROFILE	Subset Sheets:	SFPR-3of 4

Project No./Code
IM 0254-394
16311
Sheet Number 283

Stan 12:59:02 PM K:\08276\16311\Phase 2\Design\Drawings\16311DES_PH2_SantaFeSBPro3.dgn
9/27/2010 CDOT-PDFDraftQuality_XM.pltcfg CDOT-PenTable.tbl

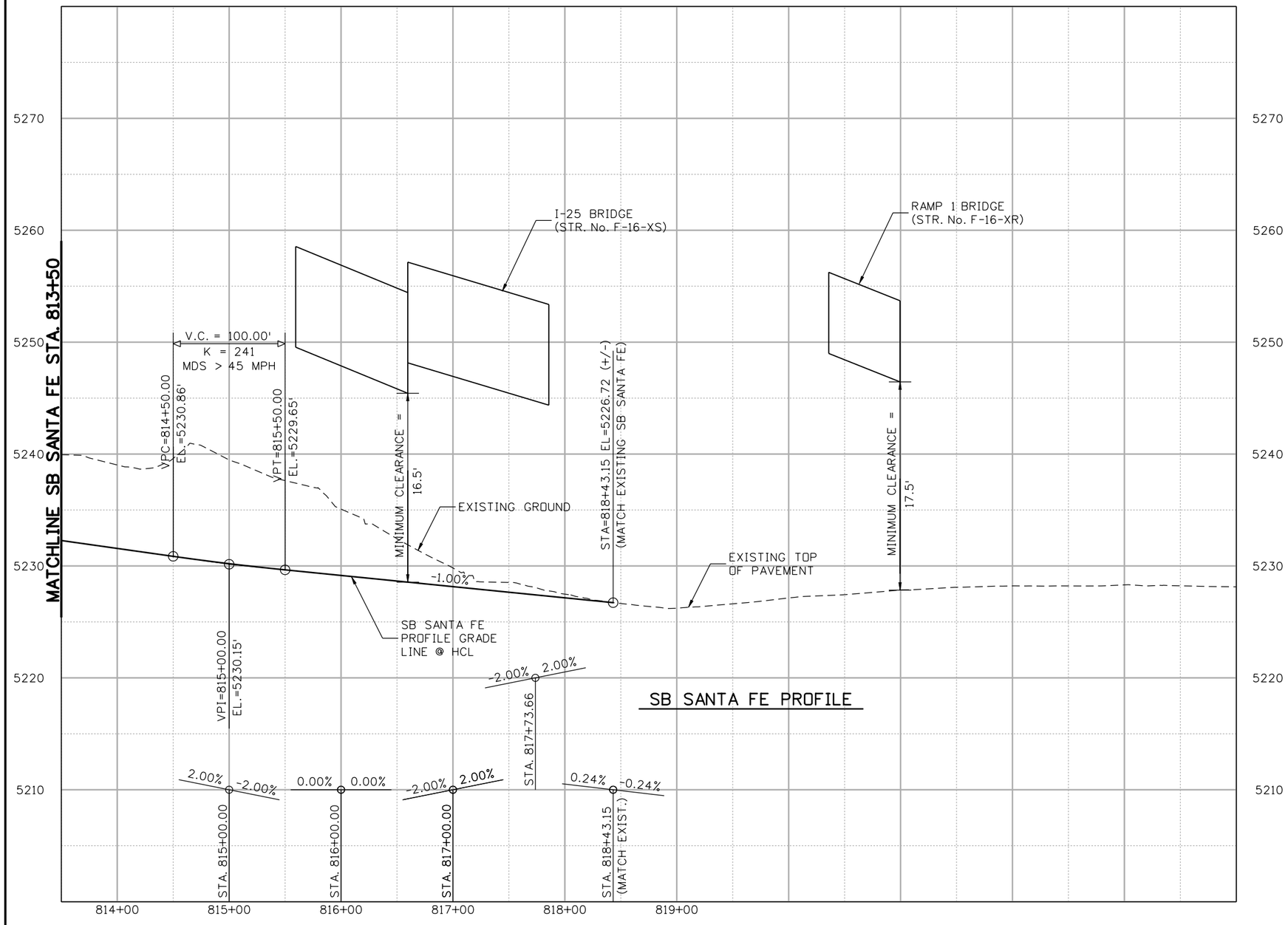

SCALE: 1"=100' HORIZ.
1"=10' VERT.

Print Date: 9/27/2010
File Name: 16311DES_PH2_SantaFeSBPro4.dgn
Horiz. Scale: 1:100 Vert. Scale: As Noted
Unit Information Unit Leader Initials

FELSBURG HOLT & ULLEVIG 6300 South Syracuse Way Centennial, CO 80111

0000

Sheet Revisions		
Date:	Comments	Init.

Colorado Department of Transportation
DEPARTMENT OF TRANSPORTATION
2000 South Holly Street
Denver, CO 80222
Phone: 303-972-9112 FAX: 303-972-9114
Region 6 RLB

As Constructed
No Revisions:
Revised:
Void:

I-25/SANTA FE INTERCHANGE
SB SANTA FE PROFILE

Designer: SPG
Detailer: SYS
Sheet Subset: PROFILE
Structure Numbers
Subset Sheets: SFPR-4 of 4

Project No./Code
IM 0254-394
16311
Sheet Number 284

Stan 12:59:05 PM K:\08276\16311\Phase 2\Design\Drawings\16311DES_PH2_SantaFeSBPro4.dgn
9/27/2010 CDOT-PDFDraftQuality_XM.pltcfg CDOT-PenTable.tbl

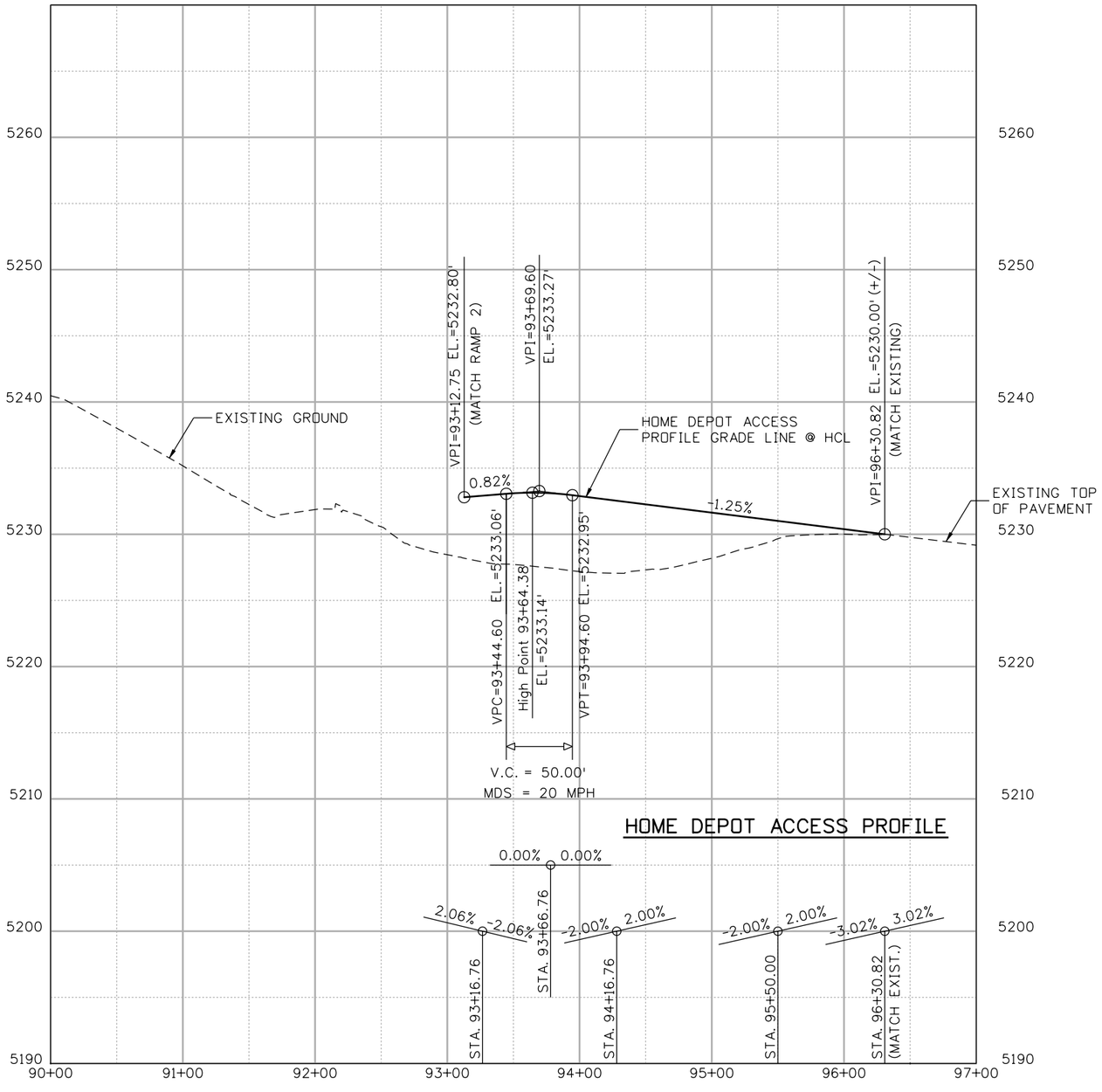

SCALE: 1"=100' HORIZ.
1"=10' VERT.

Print Date: 9/27/2010	Sheet Revisions			Colorado Department of Transportation	As Constructed	I-25/SANTA FE INTERCHANGE
File Name: 16311DES_PH2_HomeDepotPro1.dgn	Date:	Comments	Init.	2000 South Holly Street Denver, CO 80222 Phone: 303-972-9112 FAX: 303-972-9114	No Revisions:	HOME DEPOT ACCESS PROFILE
Horiz. Scale: 1:100 Vert. Scale: As Noted				Region 6 RLB	Revised:	Designer: SPG / Detailer: SYS / Sheet Subset: PROFILE
Unit Information Unit Leader Initials					Void:	Structure Numbers / Subset Sheets: HPR-1 of 1
FELSBURG HOLT & ULLEVIG 6300 South Syracuse Way Centennial, CO 80111						Project No./Code: IM 0254-394 / 16311 / Sheet Number 285

Stan 12:59:07 PM K:\08276\16311\Phase 2\Design\Drawings\16311DES_PH2_HomeDepotPro1.dgn
9/27/2010 CDOT-PDFDraftQuality_XM.pltcfg CDOT-PenTable.tbl

Know what's below. Call before you dig. 811

CONCRETE PAVEMENT JOINTING NOTES:

1. ALL CONCRETE PAVEMENT JOINTS SHALL BE INSTALLED PER CDOT STANDARD M-412-1, OR AS DIRECTED BY THE ENGINEER.
2. ALL CONCRETE JOINTS, INCLUDING ALL MATERIALS AND LABOR, WILL NOT BE PAID FOR SEPARATELY, BUT SHALL BE INCLUDED IN THE COST OF THE CONCRETE PAVEMENT.
3. THE CONCRETE PAVEMENT JOINT LAYOUT AS SHOWN ON THIS CONCRETE PAVEMENT JOINT PLANS IS FOR INFORMATION ONLY. PRIOR TO BEGINNING ANY CONCRETE PAVEMENT INSTALLATION, THE CONTRACTOR SHALL SUBMIT A CONCRETE PAVEMENT JOINT LAYOUT PLAN TO THE ENGINEER IDENTIFYING THE CONTRACTOR'S ANTICIPATED CONCRETE PAVEMENT JOINT LAYOUT AND THE PROPOSED PAVEMENT SEQUENCING. NO CONCRETE PAVEMENT PLACEMENT SHALL BEGIN UNTIL AUTHORIZED BY THE ENGINEER.
4. THE TRANSITION BETWEEN CONCRETE AND HOT MIX ASPHALT PAVEMENT SECTIONS SHALL BE CONSTRUCTED AS DIRECTED BY THE ENGINEER, AND WILL NOT BE PAID FOR SEPARATELY, BUT SHALL BE INCLUDED IN THE COST OF CONCRETE PAVEMENT.
5. THE LONGITUDINAL JOINTS ARE TO BE ALIGNED TO MATCH THE LANE LINES, OR AS DIRECTED BY THE ENGINEER.
6. THE TRANSITION BETWEEN THE CONCRETE PAVEMENT THE BRIDGES AND WITH THE EXISTING CONCRETE PAVEMENT SHALL BE CONSTRUCTED AS DIRECTED BY THE ENGINEER. THESE TRANSITIONS WILL NOT BE PAID FOR SEPARATELY, BUT SHALL BE INCLUDED IN THE COST OF THE CONCRETE PAVEMENT.
7. COORDINATE CONCRETE PAVEMENT INSTALLATION WITH CONSTRUCTION PHASING, (SEE CONSTRUCTION PHASING PLANS).

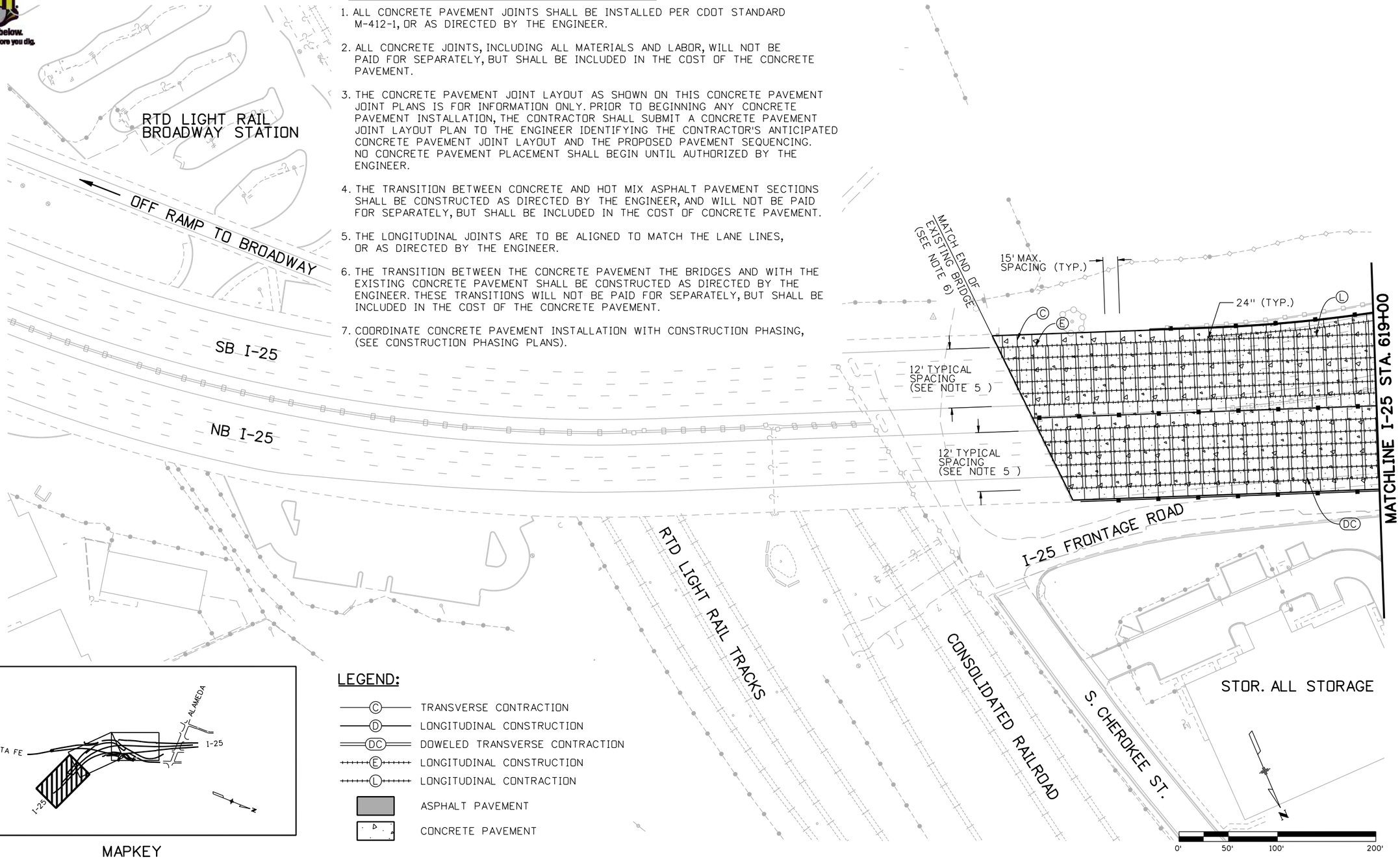

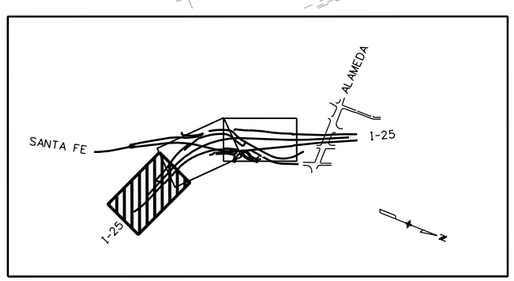

MAPKEY

LEGEND:

- (C) TRANSVERSE CONTRACTION
- (D) LONGITUDINAL CONSTRUCTION
- (DC) DOWELED TRANSVERSE CONTRACTION
- (E) LONGITUDINAL CONSTRUCTION
- (L) LONGITUDINAL CONTRACTION
- ASPHALT PAVEMENT
- CONCRETE PAVEMENT

Print Date: 9/27/2010			
File Name: 16311DES_PH2_JointPavingPlan1.dgn			
Horiz. Scale: 1:100	Vert. Scale: As Noted		
Unit Information	Unit Leader Initials		
FELSBURG HOLT & ULLEVIG 6300 South Syracuse Way Centennial, CO 80111			

Sheet Revisions

Date:	Comments	Init.

Colorado Department of Transportation
DEPARTMENT OF TRANSPORTATION
2000 South Holly Street
Denver, CO 80222
Phone: 303-972-9112 FAX: 303-972-9114
Region 6 RLB

As Constructed	
No Revisions:	
Revised:	
Void:	

I-25/SANTA FE INTERCHANGE CONCRETE JOINT PAVING PLAN

Designer:	SPG	Structure Numbers	
Detailer:	SYS		
Sheet Subset:	ROADWAY	Subset Sheets:	CJP-1 of 3

Project No./Code	
IM 0254-394	
16311	
Sheet Number	286

Stan 12:59:11 PM K:\08276\16311\Phase 2\Design\Drawings\16311DES_PH2_JointPavingPlan1.dgn
9/27/2010 CDOT-PDFDraftQuality_XM.pltcfg CDOT-PenTable.tbl

Know what's below. Call before you dig.

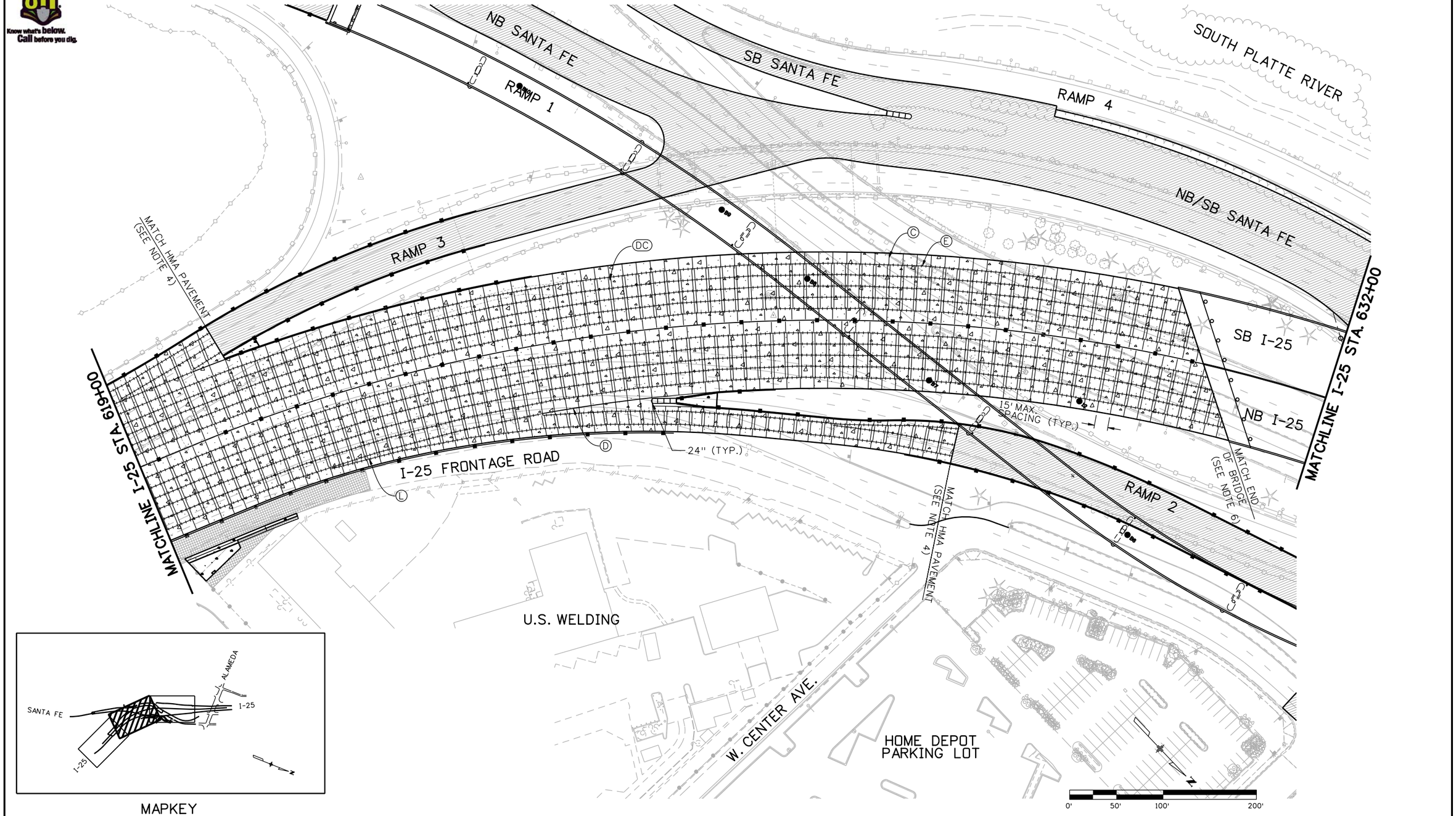

MAPKEY

Print Date: 9/27/2010		Sheet Revisions			Colorado Department of Transportation	As Constructed	I-25/SANTA FE INTERCHANGE	Project No./Code
File Name: 16311DES_PH2_JointPavingPlan2.dgn		Date:	Comments	Init.	2000 South Holly Street Denver, CO 80222 Phone: 303-972-9112 FAX: 303-972-9114	No Revisions:	CONCRETE JOINT PAVING PLAN	IM 0254-394
Horiz. Scale: 1:100 Vert. Scale: As Noted						Revised:	Designer: SPG / Structure Numbers	16311
Unit Information Unit Leader Initials					Region 6 RLB	Void:	Detailer: SYS / Sheet Subset: ROADWAY / Subset Sheets: CJP-2 of 3	Sheet Number 287
FELSBURG HOLT & ULLEVIG 6300 South Syracuse Way Centennial, CO 80111								

Stan 12:59:19 PM K:\08276\16311\Phase 2\Design\Drawings\16311DES_PH2_JointPavingPlan2.dgn
9/27/2010 CDOT-PDFDraftQuality_XM.pltcfg CDOT-PenTable.tbl

811
Know what's below.
Call before you dig.

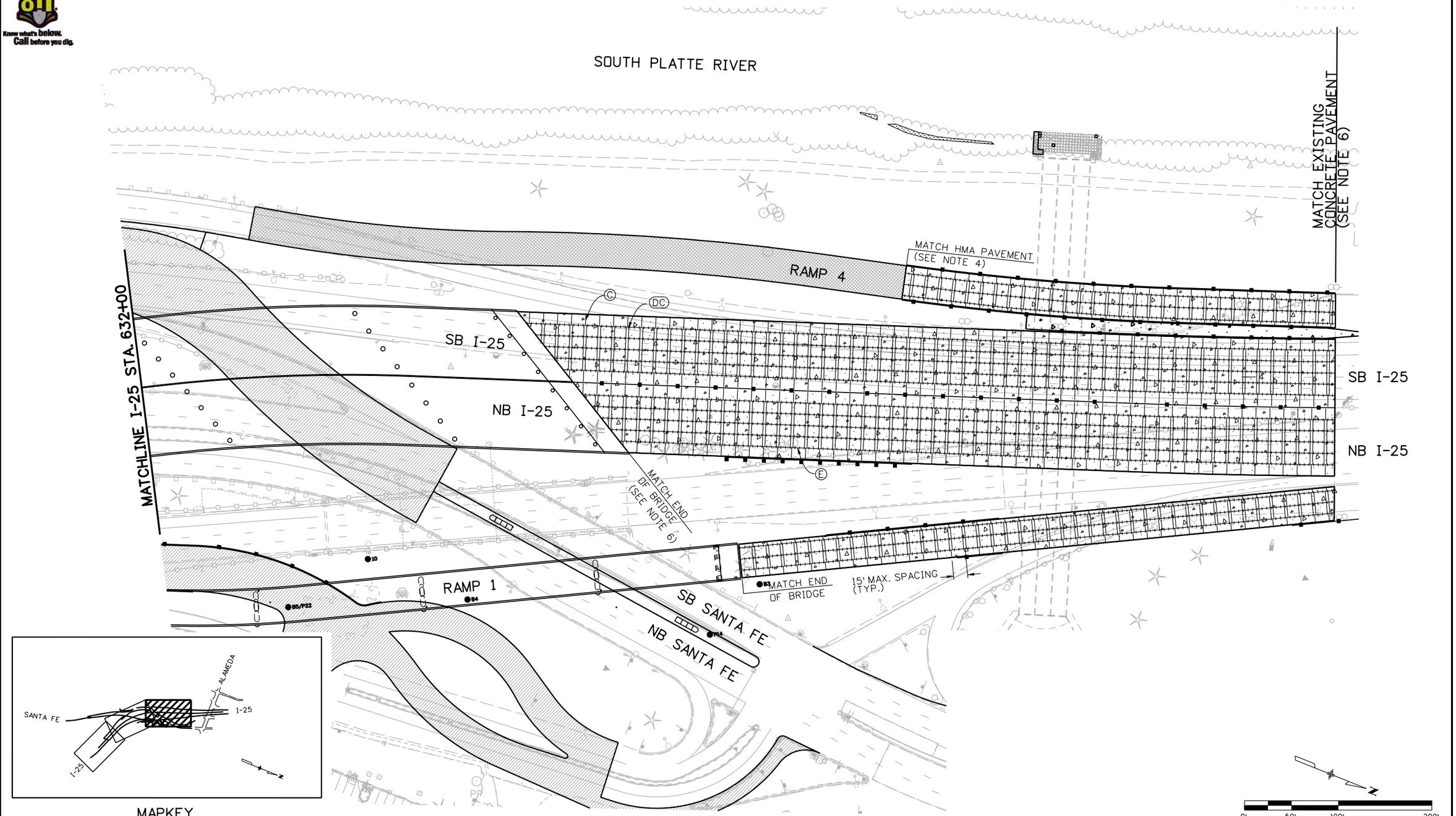

Print Date: 9/27/2010	Sheet Revisions		
File Name: 16311DES_PH2_JointPavingPlan3.dgn	Date:	Comments	Init.
Horiz. Scale: 1:100 Vert. Scale: As Noted			
Unit Information Unit Leader Initials			
FELSBURG HOLT & ULLEVIG 6300 South Syracuse Way Centennial, CO 80111			

Colorado Department of Transportation
DEPARTMENT OF TRANSPORTATION
2000 South Holly Street
Denver, CO 80222
Phone: 303-972-9112 FAX: 303-972-9114
Region 6 RLB

As Constructed	
No Revisions:	
Revised:	
Void:	

I-25/SANTA FE INTERCHANGE
CONCRETE JOINT PAVING PLAN

Designer:	SPG	Structure Numbers	
Detailer:	SYS		
Sheet Subset:	ROADWAY	Subset Sheets: CJP-3 of 3	

Project No./Code
IM 0254-394
16311
Sheet Number 288

Stan 12:59:26 PW K:\08276\16311\Phase 2\Design\Drawings\16311DES_PH2_JointPavingPlan3.dgn
9/27/2010 CDOT-PDFDraftQuality_XM.pltcfg CDOT-PenTable.tbl

SUMMARY OF TRAFFIC ENGINEERING ITEMS

ITEM NO.	ITEM DESCRIPTION	UNITS	QUANTITY	REMARKS
202-00250	REMOVAL OF PAVEMENT MARKING	SF	32620	
202-00805	REMOVAL OF OVERHEAD SIGN STRUCTURE	EACH	4	
202-00810	REMOVAL OF GROUND SIGN	EACH	57	
202-00815	REMOVAL OF SIGN (SPECIAL)	EACH	6	
202-00821	REMOVAL OF SIGN PANEL	EACH	15	
202-00825	REMOVAL OF FLASHING BEACON	EACH	2	INCLUDES POST AND ALL ATTACHMENTS
202-00831	REMOVAL OF TRAFFIC SIGNAL HEAD	EACH	4	
202-00840	REMOVAL OF TRAFFIC SIGNAL POLE	EACH	2	
210-00473	RESET TV CAMERAS	EACH	1	CDOT ITS CAMERA AND ASSOCIATED EQUIPMENT
210-00810	RESET GROUND SIGN	EACH	1	
210-00815	RESET SIGN PANEL	EACH	1	
210-00820	RESET VARIABLE MESSAGE SIGN	EACH	1	
210-00848	RESET TRAFFIC SIGNAL CONTROLLER AND CABINET	EACH	1	
210-00910	RESET TRAFFIC COUNTER (PERMANENT)	EACH	4	ALL ITS DETECTOR DEVICES AND HARDWARE
503-00024	DRILLED CAISSON (24 INCH)	LF	14	
503-00048	DRILLED CAISSON (48 INCH)	LF	74	
503-00054	DRILLED CAISSON (54 INCH)	LF	200	
612-00001	DELINEATOR (TYPE I)	EACH	100	
612-00002	DELINEATOR (TYPE II)	EACH	100	
612-00021	DELINEATOR (TYPE I) (BARRIER)	EACH	50	
612-00022	DELINEATOR (TYPE II) (BARRIER)	EACH	50	
613-01200	2 INCH ELECTRICAL CONDUIT (PLASTIC)	LF	1090	
613-01300	3 INCH ELECTRICAL CONDUIT (PLASTIC)	LF	90	
613-07000	PULL BOX (SPECIAL)	EACH	3	
613-07026	PULL BOX (16"X24"X12")	EACH	4	ELECTRIC BOXES
613-07023	PULL BOX (24"X36"X24")	EACH	3	TRAFFIC BOXES
613-07039	PULL BOX (30"X48"X18") DEEP	EACH	2	CDOT ITS
613-32300	LIGHT STANDARD STEEL (30 FOOT)	EACH	2	
614-00011	SIGN PANEL (CLASS I)	SF	181	
614-00012	SIGN PANEL (CLASS II)	SF	774	
614-00013	SIGN PANEL (CLASS III)	SF	3188	
614-00040	SIGN POST (SPECIAL)	LF	12	WALL MOUNTED SIGN
614-00216	STEEL SIGN POST (2X2 INCH TUBING)	LF	0	
614-00818	STEEL SIGN POST (W 8X18)	LF	35	
614-01583	STEEL SIGN SUPPORT (2-1/2 IN ROUND SCH 80) (POST AND SLIPBASE)	EACH	59	GROUND MOUNTED SIGNS
614-03003	CONCRETE FOOTING (TYPE 3)	EACH	2	
614-32400	MONOTUBE OVERHEAD SIGN CANTILEVER (24 INCH DIAMETER)	EACH	1	
614-42000	MONOTUBE OVERHEAD SIGN BRIDGE (20 INCH DIAMETER)	EACH	3	
614-42400	MONOTUBE OVERHEAD SIGN BRIDGE (24 INCH DIAMETER)	EACH	1	
614-70336	TRAFFIC SIGNAL FACE (12-12-12)	EACH	19	LED TYPE
614-70448	TRAFFIC SIGNAL FACE (12-12-12-12-12)	EACH	1	LED TYPE
614-72855	TRAFFIC SIGNAL CONTROLLER CABINET	EACH	2	
614-72875	LOOP DETECTOR WIRE	LF	1460	
614-81160	TRAFFIC SIGNAL-LIGHT POLE STEEL (1-60 FOOT MAST ARM)	EACH	1	
614-85312	TRAFFIC SIGNAL SPAN WIRE POLE (12 INCH)	EACH	1	
614-85362	TRAFFIC SIGNAL-LIGHT SPAN WIRE POLE (12 INCH)	EACH	3	
614-86246	TRAFFIC SIGNAL CONTROLLER (170E-HC11)	EACH	2	
627-00005	EPOXY PAVEMENT MARKING	GAL	207	
627-01010	PREFORMED PLASTIC PAVEMENT MARKING (TYPE II) (INLAID)	SF	11087	I-25 AND RAMPS
627-30327	PREFORMED PLASTIC PAVEMENT MARKING (WORD-SYMBOL) (TYPE III)	SF	393	I-25 RAMPS
627-30332	PREFORMED PLASTIC PAVEMENT MARKING (XWALK-STOP LINE) (TYPE III)	SF	501	I-25 RAMPS

Print Date: 9/27/2010
File Name: 16311TRAF_PH2_TrafficEngineeringItems_TAB_Sheet01.dgn
Horiz. Scale: 1:1 Vert. Scale: As Noted
Unit Information Unit Leader Initials

FELSBURG HOLT & ULLEVIG 6300 South Syracuse Way Centennial, CO 80111

Sheet Revisions

Date:	Comments	Init.

Colorado Department of Transportation
DEPARTMENT OF TRANSPORTATION
2000 South Holly Street
Denver, CO 80222
Phone: 303-972-9112 FAX: 303-972-9114
Region 6 RLB

As Constructed
No Revisions:
Revised:
Void:

I-25/SANTA FE INTERCHANGE
SUMMARY OF
TRAFFIC ENGINEERING ITEMS

Designer: LCL
Detailer: LCL
Sheet Subset: TRAFFIC
Structure Numbers
Subset Sheets: TE-1 of 1

Project No./Code
IM 0254-394
16311
Sheet Number 289

Stan 1:45:41 PM K:\08276\16311\Phase 2\Traffic_ITS\Drawings\16311TRAF_PH2_TrafficEngineeringItems_TAB_Sheet01.dgn
9/27/2010 CDOT-PDFDraftQuality_XM.pltcfg CDOT-PenTable.tbl

SIGNING TABULATION (Sheet 1 of 6)

SIGN NO.	LOCATION	PLAN SHEET	SIGN CODE	SIGN PANEL SIZE W" x H"	BACKGROUND COLOR	REMARKS	SIGN PANEL (SF) CLASS I	CLASS II	CLASS III	REMOVE GROUND SIGN EACH	REMOVE GROUND SIGN (SPECIAL) EACH	REMOVE OVERHEAD SIGN STRUCTURE EACH	REMOVE SIGN PANEL EACH	REMOVE FLASHING BEACON EACH	RESET VARIABLE MESSAGE SIGN EACH	RESET SIGN PANEL EACH	STEEL SIGN POST: 2.5-Inch Round (Post & Slipbase) EACH 10'	12'	14'	LF	2 x 2-Inch Tubing EACH 13'	15'	17'	LF	W8x18 BEAM LF	SIGN POST SPECIAL EA	LF	CONC. FOOTING TYPE 3 EACH
1A	NB Santa Fe Dr	GS-1	GUIDE SIGN	144 x 144	GREEN	Refer to Overhead Sign Tabulation			144.0																			
1B		SS-6	GUIDE SIGN	252 x 144	GREEN				252.0																			
2	NB Santa Fe Dr	GS-1, SS-6	GUIDE SIGN			Class III Ground Sign					1																	
3	NB Santa Fe Dr	GS-2, SS-7	GUIDE SIGN	144 x 120	GREEN				120.0																35			2
4	NB Santa Fe Dr	GS-2, SS-8	GUIDE SIGN			Existing Class III Ground Sign					1																	
5	NB Santa Fe Dr	GS-2, SS-7	GUIDE SIGN			Existing Class III Ground Sign					1																	
6	NB Santa Fe Dr	GS-2, SS-7	GUIDE SIGN			Existing Class III Ground Sign					1																	
7	NB Santa Fe Dr	GS-2, SS-8	GUIDE SIGN			Existing Class III Ground Sign					1																	
8A	NB Santa Fe Dr	GS-2	GUIDE SIGN	144 x 144	GREEN	Refer to Overhead Sign Tabulation			144.0																			
8B		SS-7	GUIDE SIGN	240 x 144	GREEN				240.0																			
9	SB I-25	GS-2, SS-2	GUIDE SIGNS			Existing Sign Bridge						1																
10A	SB I-25		GUIDE SIGN	108 x 30	GREEN	Refer to Overhead Sign Tabulation			22.5																			
10B		GS-2	GUIDE SIGN	204 x 96	GREEN				136.0																			
10C	SB I-25	SS-2	GUIDE SIGN	120 x 30	GREEN	Refer to Overhead Sign Tabulation			25.0																			
10D			GUIDE SIGN	144 x 96	GREEN				96.0																			
11	NB I-25	GS-2, SS-2	GUIDE SIGN			Existing Sign Cantilever						1																
12A	NB I-25	GS-2	GUIDE SIGN	120 x 30	GREEN	Refer to Overhead Sign Tabulation			25.0																			
12B		SS-2	GUIDE SIGN	192 x 144	GREEN				192.0																			
13	NB I-25	GS-2, SS-2	EXIT SIGN							1																		
14	NB I-25 / RAMP 2	GS-2, SS-2	EXIT SIGN (207B)	108 x 60	GREEN	E5-1a		45										2		24								
15	NB Santa Fe Dr	GS-2, SS-2	GUIDE SIGN							1																		
16	SB I-25	GS-3, SS-3	EXIT SIGN							1																		
17	SB I-25	GS-3, SS-3	GUIDE SIGN			Existing Sign Cantilever						1																
18	SB I-25 / RAMP 4	GS-3, SS-3	EXIT SIGN (207B)	108 x 60	GREEN	E5-1a		45										2		24								
19A	NB I-25		GUIDE SIGN	120 x 30	GREEN	Refer to Overhead Sign Tabulation			25.0																			
19B		GS-3	GUIDE SIGN	144 x 120	GREEN				120.0																			
19C	NB I-25	SS-4	GUIDE SIGN	120 x 30	GREEN	Refer to Overhead Sign Tabulation			25.0																			
19D			GUIDE SIGN	192 x 120	GREEN				160.0																			
20	EB Alameda Ave	GS-3	GUIDE SIGN	48 x 72	GREEN			24.0											2	28								
21	EB Alameda Ave	GS-3	GUIDE SIGN	48 x 72	GREEN			24.0											2	28								
22	EB Alameda Ave	GS-3	GUIDE SIGN							1																		
23	SB Santa Fe Dr	GS-3, SS-3	GUIDE SIGN							1																		
						SHEET TOTALS	0	138.0	1726.5	5	5	3	0	0	0	0	0	4	4	104	0	0	0	0	35	0	0	2

GENERAL SIGNING NOTES

1. EXACT LOCATION OF GROUND SIGNS SHALL CONFORM TO CDOT STANDARD PLAN NO. S-614-1, AND SHALL BE FIELD VERIFIED BY THE ENGINEER PRIOR TO INSTALLATION.
2. CLASS I, CLASS II AND CLASS III SIGNS SHALL CONFORM TO CDOT STANDARD PLAN NO. S-614-2, S-614-3 AND S-614-4, RESPECTIVELY.
3. THE RETROREFLECTIVE SHEETING FOR ALL CLASS III SIGN PANELS SHALL BE THE 3M DIAMOND GRADE REFLECTIVE SHEETING SERIES 4000 (DG3). OVERHEAD SIGN LIGHTING WILL NOT BE REQUIRED.
4. TUBULAR STEEL SIGN SUPPORTS SHALL CONFORM WITH CDOT STANDARD PLAN S-614-8. P2-TYPE POSTS SHALL BE PROVIDED FOR THE LOCATIONS SPECIFIED IN THE PLANS. SOME SIGN INSTALLATIONS SPECIFIED IN THE PLANS (ALONG ALAMEDA AND KALAMATH) MAY BE 2-INCH BY 2-INCH TUBING, PER CITY OF DENVER STANDARDS.
5. ANY U-BRACKETS REQUIRED FOR THIS PROJECT SHALL BE INCIDENTAL TO THE SIGN PANEL (CLASS II) PAY ITEM.
6. ANY AND ALL STRUCTURE IDENTIFICATION PANELS SHALL BE INCIDENTAL TO THE STRUCTURE AND ARE NOT TABULATED HEREIN.
7. SIGN POSTS MOUNTED ON BARRIERS SHALL CONFORM WITH CDOT STANDARD S-614-21. SLIP BASE BARRIER STUBS SHALL BE PROVIDED TO SUPPORT P2-TYPE POSTS. PAYMENT FOR SIGN SUPPORT AND POST SHALL BE MADE AS "SIGN POST (SPECIAL)". SADDLE BRACKETS MAY BE USED ONLY UPON APPROVAL BY THE ENGINEER.
8. OVERHEAD GUIDE SIGNS MOUNTED ON CANTILEVERS OR SIGN BRIDGES SHALL CONFORM TO CDOT STANDARD PLAN S-614-50 AND THE PLAN CROSS-SECTIONS. WALKWAYS OR OVERHEAD LIGHTING SHALL NOT BE INSTALLED ON THE OVERHEAD (STATIC) SIGN STRUCTURES.
9. ALL REMOVED SIGN PANELS SHALL BE SALVAGED AND RETURNED TO CDOT OR THE CITY OF DENVER, UNLESS SPECIFIED OTHERWISE BY THE ENGINEER.
10. THE CONTRACTOR SHALL POTHOLE THE LOCATION OF ANY CAISSON FOUNDATION PRIOR TO ORDERING OVERHEAD SIGN STRUCTURES, TO IDENTIFY ANY REQUIRED ADJUSTMENTS DUE TO FIELD CONDITIONS OR CONFLICTS WITH UTILITIES.

Print Date: 9/27/2010
File Name: 16311TRAF_PH2_Signing_TAB_Sheet01.dgn
Horiz. Scale: 1:1 Vert. Scale: As Noted
Unit Information Unit Leader Initials

FELSBURG HOLT & ULLEVIG 6300 South Syracuse Way Centennial, CO 80111

Sheet Revisions

Date:	Comments	Init.

Colorado Department of Transportation
2000 South Holly Street
Denver, CO 80222
Phone: 303-972-9112 FAX: 303-972-9114
Region 6 RLB

As Constructed
No Revisions:
Revised:
Void:

I-25/SANTA FE INTERCHANGE
TABULATION OF TRAFFIC SIGNS AND GENERAL NOTES

Designer: LCL
Detailer: LCL
Sheet Subset: TRAFFIC
Structure Numbers:
Subset Sheets: ST-1 of 7

Project No./Code
IM 0254-394
16311
Sheet Number 290

Stan 1:45:44 PM K:\08276\16311\Phase 2\Traffic_ITS\Drawings\16311TRAF_PH2_Signing_TAB_Sheet01.dgn
9/27/2010 CDOT-PDFDraftQuality_XM.pltcfg CDOT-PenTable.tbl

SIGNING TABULATION (Sheet 2 of 6)

SIGN NO.	LOCATION	PLAN SHEET	SIGN CODE	SIGN PANEL SIZE	BACKGROUND COLOR	REMARKS	SIGN PANEL (SF)			REMOVE GROUND SIGN	REMOVE GROUND SIGN (SPECIAL)	REMOVE OVERHEAD SIGN STRUCTURE	REMOVE SIGN PANEL	REMOVE FLASHING BEACON	RESET VARIABLE MESSAGE SIGN	RESET SIGN PANEL	STEEL SIGN POST								W8x18 BEAM	SIGN POST SPECIAL		CONC. FOOTING TYPE 3
							CLASS I	CLASS II	CLASS III								2.5-Inch Round (Post & Slipbase)				2 x 2-Inch Tubing							
																	EACH			LF	EACH			LF				
				W" x H"						EA	EACH	EA	EA	EACH	EA	EA	10'	12'	14'		13'	15'	17'		LF	EA	LF	EACH
24	RAMP 2	GS-3, SS-10	GUIDE SIGN	72 x 84	GREEN			42											2	28								
25	RAMP 2	GS-3, SS-10	GUIDE SIGN							1																		
26	SB Santa Fe Dr	GS-3, SS-9	GUIDE SIGN			Existing Class III Ground Sign					1																	
27	SB Santa Fe Dr	GS-3, SS-9	GUIDE SIGN	48 x 60	GREEN			20										2		24								
28	SB Santa Fe Dr	GS-3, SS-9	GUIDE SIGNS			Existing Sign Bridge						1																
29	SB Santa Fe Dr	GS-3, SS-9	GUIDE SIGN	48 x 60	GREEN			20										2		24								
30	SB I-25	GS-3, SS-4	GUIDE SIGN										1															
31	SB I-25	GS-3, SS-4	GUIDE SIGN	252 x 84	GREEN	Mount on Existing Butterfly Structure			147.0																			
32A	SB I-25	GS-4	GUIDE SIGN	120 x 30	GREEN	Mount on Existing Sign Bridge			25.0																			
32B			GUIDE SIGN	240 x 144	GREEN				240.0																			
32C	SB I-25	SS-5	GUIDE SIGN	108 x 30	GREEN	Mount on Existing Sign Bridge			22.5																			
32D			GUIDE SIGN	132 x 144	GREEN				132.0																			
33	SB I-25	GS-4, SS-5	GUIDE SIGNS										2															
34	SB I-25	GS-4	GUIDE SIGN	252 x 84	GREEN	Mount on Existing Butterfly Structure			147.0																			
35	SB I-25	GS-4	GUIDE SIGN										1															
36A	SB I-25	GS-4	GUIDE SIGN	132 x 30	GREEN	Mount on Existing Sign Bridge			27.5																			
36B			GUIDE SIGN	132 x 144	GREEN				132.0																			
36C	SB I-25		GUIDE SIGN	108 x 30	GREEN	Mount on Existing Sign Bridge			22.5																			
36D			GUIDE SIGN	132 x 144	GREEN				132.0																			
37	SB I-25	GS-4	GUIDE SIGNS										2															
38	NB I-25	GS-5	GUIDE SIGNS										1															
39A	NB I-25	GS-5	GUIDE SIGN	120 x 30	GREEN	Mount on Existing Sign Cantilever			25.0																			
39B			GUIDE SIGN	192 x 144	GREEN				192.0																			
40	NB I-25	GS-5, SS-1	GUIDE SIGNS			Includes Removal of Lights							1															
41A	NB I-25	GS-5	GUIDE SIGN	120 x 30	GREEN	Mount on Existing Sign Bridge			25.0																			
41B		SS-1	GUIDE SIGN	192 x 144	GREEN				192.0																			
42						Intentionally Left Blank																						
43						Intentionally Left Blank																						
44						Intentionally Left Blank																						
45						Intentionally Left Blank																						
46						Intentionally Left Blank																						
47						Intentionally Left Blank																						
48						Intentionally Left Blank																						
49						Intentionally Left Blank																						
50	NB I-25	SS-1	W4-2R										1															
51	NB I-25	SS-1	R3-7AR	48 x 48	WHITE	Mount on Existing Post 50		16.0																				
52	NB I-25	SS-1	W13-2 (25)	48 x 60	YELLOW	Mount on Existing Sign Bridge Post		20.0																				
53	NB I-25	SS-1	R3-7AR (750 FT)			Existing Wall Mounted Post				1																		
54	NB I-25	SS-1	R3-7AR	48 x 48	WHITE	Wall Mounted Post (Special)																				1	12	
55	SB I-25	SS-2	W4-1R	48 x 48	YELLOW			16.0											1	14								
56	SB I-25 On Ramp from US-85	SS-2	W4-3R							1																		
57	SB I-25	SS-2	RTD Guide Sign / VMS			Reset VMS & Associated Sign Panel									1	1												
58	NB I-25 On Ramp from US-85	SS-2	W4-3L							1																		
59	SB I-25 On Ramp from US-85	SS-2	W4-3L							1																		
60	SB I-25	SS-2	W13-2 (25)	48 x 60	YELLOW	Mount on Cantilever Post		20.0																				
61	NB I-25 Off Ramp to US-85	SS-2	R5-1a							1																		
62						Intentionally Left Blank																						
63						Intentionally Left Blank																						
64						Intentionally Left Blank																						
						SHEET TOTALS	0	154.0	1461.5	6	1	1	9	0	1	1	0	4	3	90	0	0	0	0	0	1	12	0

Print Date: 9/27/2010
File Name: 16311TRAF_PH2_Signing_TAB_Sheet02.dgn
Horiz. Scale: 1:1 Vert. Scale: As Noted
Unit Information Unit Leader Initials
FELSBURG HOLT & ULLEVIG 6300 South Syracuse Way Centennial, CO 80111

Sheet Revisions

Date:	Comments	Init.

Colorado Department of Transportation
DEPARTMENT OF TRANSPORTATION
2000 South Holly Street
Denver, CO 80222
Phone: 303-972-9112 FAX: 303-972-9114
Region 6 RLB

As Constructed
No Revisions:
Revised:
Void:

I-25/SANTA FE INTERCHANGE
TABULATION OF TRAFFIC SIGNS
Designer: LCL
Detailer: LCL
Sheet Subset: TRAFFIC
Structure Numbers
Subset Sheets: ST-2 of 7

Project No./Code
IM 0254-394
16311
Sheet Number 291

Stan 1:45:48 PM K:\08276\16311\Phase 2\Traffic_ITS\Drawings\16311TRAF_PH2_Signing_TAB_Sheet02.dgn
9/27/2010 CDOT-PDFDraftQuality_XM.pltcfg CDOT-PenTable.tbl

SIGNING TABULATION (Sheet 3 of 6)

SIGN NO.	LOCATION	PLAN SHEET	SIGN CODE	SIGN PANEL SIZE	BACKGROUND COLOR	REMARKS	SIGN PANEL (SF)			REMOVE GROUND SIGN	REMOVE GROUND SIGN (SPECIAL)	REMOVE OVERHEAD SIGN STRUCTURE	REMOVE SIGN PANEL	REMOVE FLASHING BEACON	RESET VARIABLE MESSAGE SIGN	RESET SIGN PANEL	STEEL SIGN POST									SIGN POST SPECIAL		CONC. FOOTING TYPE 3
							CLASS I	CLASS II	CLASS III								2.5-Inch Round (Post & Slipbase)				2 x 2-Inch Tubing				W8x18 BEAM			
																	EACH			LF	EACH			LF				
				W" x H"						EA	EACH	EA	EA	EACH	EA	EA	10'	12'	14'		13'	15'	17'		LF	EA	LF	EACH
65	SB I-25 Off Ramp to US-85	SS-3	R2-1							1																	
66	SB I-25 Off Ramp to US-85	SS-3	R2-1							1																	
67	RAMP 4	SS-3	R2-1 (45)	48 x 60	WHITE			20.0										1		12							
68	SB I-25 Off Ramp to US-85	SS-3	W13-2							1																	
69	RAMP 1	SS-3	W4-2R	48 x 48	YELLOW			16.0											1	14							
70	NB I-25	SS-3	W4-1R							1																	
71	NB I-25 at Ramp 1	SS-3	W4-1R	48 x 48	YELLOW			16.0											1	14							
72						Intentionally Left Blank																					
73						Intentionally Left Blank																					
74						Intentionally Left Blank																					
75	RAMP 4	SS-4	W13-2 (45)	48 x 60	YELLOW	Mount on Sign Bridge Post 19		20.0																			
76	SB I-25	SS-5	R3-7AR										1														
77A	SB I-25	SS-5	R3-8R	60 x 60	WHITE	Mount on Existing Dynamic Cantilever		25.0																			
77B			SPECIAL (1000 FT)	60 x 18	WHITE			7.5																			
78	SB I-25	SS-5	R3-7AR							1																	
79	SB I-25	SS-5	R3-7AR							1																	
80						Intentionally Left Blank																					
81						Intentionally Left Blank																					
82						Intentionally Left Blank																					
83						Intentionally Left Blank																					
84						Intentionally Left Blank																					
85	NB Santa Fe Dr	SS-6	R2-1 (45)	36 x 48	WHITE			12.0										1		12							
86	NB Santa Fe Dr	SS-6	R3-12b	36 x 60	WHITE	Mount on Sign Bridge Post 1		15.0																			
87A	NB Santa Fe Dr	SS-6	R3-8R	48 x 48	WHITE	Mount on Existing Dynamic Cantilever		16.0											1	14							
87B			SPECIAL (1000 FT)	48 x 12	WHITE			4.0																			
88	NB Santa Fe Dr	SS-6	W3-5 (35)	48 x 48	YELLOW			16.0											1	14							
89	NB Santa Fe Dr	SS-7	R3-7AR	48 x 48	WHITE			16.0										1		12							
90	NB Santa Fe Dr	SS-7	R3-8R	48 x 48	WHITE	Mount on Sign Bridge Post 8		16.0																			
91	RAMP 1	SS-7	W13-3 (45)	48 x 60	YELLOW			20.0										1		12							
92	NB Santa Fe to SB I-25 Ramp	SS-7	W13-3							1																	
93	NB Santa Fe to SB I-25 Ramp	SS-7	W13-3							1																	
94	NB Santa Fe to SB I-25 Ramp	SS-7	W1-8							1																	
95	NB Santa Fe to SB I-25 Ramp	SS-7	W1-8							1																	
96	NB Santa Fe to SB I-25 Ramp	SS-7	W1-8							1																	
97	NB Santa Fe Dr	SS-7	R3-7AR							1																	
98	NB Santa Fe Dr	SS-7	R2-1 (35)	36 x 48	WHITE			12.0																			
99A	NB Santa Fe Dr	SS-7	M3-3i	24 x 12	BLUE			2.0																			
99B			M1-1A (25)	24 x 24	BLUE			4.0																			
99C			M5-1Ri	21 x 15	BLUE	Post Includes U-Bracket		2.2										1		12							
99A	NB Santa Fe Dr	SS-7	M3-1i	24 x 12	BLUE			2.0																			
99B			M1-1A (25)	24 x 24	BLUE			4.0																			
99C			M6-2Ri	21 x 15	BLUE			2.2																			
100	NB Santa Fe Dr	SS-7	W3-3	48 x 48	YELLOW			16.0											1	14							
101	NB Santa Fe Dr	SS-7	R3-7R	30 x 30	WHITE		6.25											1		10							
102						Intentionally Left Blank																					
103						Intentionally Left Blank																					
104						Intentionally Left Blank																					
105	SB Santa Fe	SS-8	W4-3R							1																	
106	SB Santa Fe	SS-8	W4-3R							1																	
						SHEET TOTALS	6.25	263.9	0.0	14	0	0	1	0	0	0	1	5	5	140	0	0	0	0	0	0	0	0

Print Date: 9/27/2010
File Name: 16311TRAF_PH2_Signing_TAB_Sheet03.dgn
Horiz. Scale: 1:1 Vert. Scale: As Noted
Unit Information Unit Leader Initials

FELSBURG HOLT & ULLEVIG 6300 South Syracuse Way Centennial, CO 80111

Sheet Revisions

Date:	Comments	Init.

Colorado Department of Transportation
2000 South Holly Street
Denver, CO 80222
Phone: 303-972-9112 FAX: 303-972-9114
Region 6 RLB

As Constructed
No Revisions:
Revised:
Void:

I-25/SANTA FE INTERCHANGE
TABULATION OF TRAFFIC SIGNS

Designer: LCL
Detailer: LCL
Sheet Subset: TRAFFIC
Structure Numbers
Subset Sheets: ST-3 of 7

Project No./Code
IM 0254-394
16311
Sheet Number 292

Stan 1:45:52 PM K:\08276\16311\Phase 2\Traffic_ITS\Drawings\16311TRAF_PH2_Signing_TAB_Sheet03.dgn
9/27/2010 CDOT-PDFDraftQuality_XM.pltcfg CDOT-PenTable.tbl

SIGNING TABULATION (Sheet 4 of 6)

SIGN NO.	LOCATION	PLAN SHEET	SIGN CODE	SIGN PANEL SIZE	BACKGROUND COLOR	REMARKS	SIGN PANEL (SF)			REMOVE GROUND SIGN	REMOVE GROUND SIGN (SPECIAL)	REMOVE OVERHEAD SIGN STRUCTURE	REMOVE SIGN PANEL	REMOVE FLASHING BEACON	RESET VARIABLE MESSAGE SIGN	RESET SIGN PANEL	STEEL SIGN POST								SIGN POST SPECIAL		CONC. FOOTING TYPE 3
																	2.5-Inch Round (Post & Slipbase)				2 x 2-Inch Tubing				W8x18 BEAM		
																	EACH			LF	EACH			LF			
				W" x H"			CLASS I	CLASS II	CLASS III	EA	EACH	EA	EA	EACH	EA	EA	10'	12'	14'		13'	15'	17'		LF	EA	LF	EACH
107	SB Santa Fe Dr	SS-8	R4-7	24 x 30	WHITE		5.0										1			10							
108A	SB Santa Fe Dr	SS-8	M3-3i	24 x 12	BLUE	Post Includes U-Bracket		2.0																			
108B			M1-1	24 x 24	BLUE			4.0										1		12							
108C			M6-1i	21 x 15	BLUE			2.2																			
109	RAMP 4	SS-8	W4-3R	48 x 48	YELLOW			16.0											1	14							
110	NB Santa Fe Dr	SS-8	W1-2aR	36 x 36	YELLOW			9.0										1		12							
111	SB Santa Fe Dr	SS-8	W4-6L	48 x 48	YELLOW			16.0											1	14							
112A	NB Santa Fe Dr	SS-8	R4-7	24 x 30	WHITE	Mount Signs Back-to-Back	5.0										1			10							
112B	SB Santa Fe Dr		R3-7L	30 x 30	WHITE		6.25																				
113A	RAMP 3	SS-8	R9-3a	24 x 24	WHITE		4.0											1		12							
113B			R5-6	24 x 24	WHITE		4.0																				
114	RAMP 3	SS-8	R1-2	36 x 36	RED			3.25									1			10							
115	NB Santa Fe Dr	SS-8	R3-12a	36 x 60	WHITE			15.0																			
116	NB Santa Fe Dr	SS-8	R3-4	30 x 30	WHITE		6.25										1			10							
117	SB Santa Fe Dr	SS-8	R3-5L	30 x 36	WHITE	Mount on Signal Mast Arm	7.5																				
118	NB Santa Fe Dr	SS-8	W3-3			Remove Flashing Beacon and Sign								1													
119	NB Santa Fe Dr	SS-8	W3-3			Remove Flashing Beacon and Sign								1													
120	SB Santa Fe Dr	SS-8	W4-2R							1																	
121	NB Santa Fe Dr	SS-8	R2-1 (35)							1																	
122	Santa Fe Dr	SS-8	R2-1 (35 & 45)							1																	
123						Intentionally Left Blank																					
124						Intentionally Left Blank																					
125	SB Santa Fe Dr	SS-9	R4-7							1																	
126A	SB Santa Fe Dr	SS-9	R3-7L	30 x 30	WHITE		6.25											1		12							
126B			SPECIAL (1000 FT)	30 x 10	WHITE		2.08																				
127	SB Santa Fe Dr	SS-9	W9-1R, W16-2							1																	
128	SB Santa Fe Dr	SS-9	W1-2aL	36 x 36	YELLOW			9.0										1		12							
129	RAMP 2 / Santa Fe Dr	SS-9	W1-7	48 x 24	YELLOW			8.0									2			20							
130	RAMP 1 (Old Alignment)	SS-9	R9-3a, R5-6							1																	
131	SB Santa Fe Dr	SS-9	W13-3							1																	
132	SB Santa Fe Dr	SS-9	R3-7R							1																	
133	SB Santa Fe Dr	SS-9	R3-7R							1																	
134	EB Alameda Ave	SS-9	M3-3i	24 x 12	BLUE	Add Panel to Existing Route Assembly	2.0																				
135A	NB Santa Fe Dr	SS-9	M4-5i	24 x 12	BLUE			2.0											1	14							
135B			M3-1i	24 x 12	BLUE			2.0																			
135C			M1-1A (25)	24 x 24	BLUE			4.0																			
135D			M6-3i	21 x 15	BLUE			2.19																			
136	NB Santa Fe Dr	SS-9	Route Assembly							1																	
137A	EB Alameda Ave	SS-9	M4-5i	24 x 12	BLUE			2.0											1	14							
137B			M3-1i	24 x 12	BLUE			2.0																			
137C			M1-1A (25)	24 x 24	BLUE			4.0																			
137D			M5-1Li	21 x 15	BLUE			2.19																			
138						Intentionally Left Blank																					
139						Intentionally Left Blank																					
140	RAMP 2	SS-10	W3-3	48 x 48	YELLOW			16.0											1	14							
141	RAMP 2	SS-10	W3-3	48 x 48	YELLOW			16.0											1	14							
142	I-25 (Ramp 2) Frontage Rd	SS-10	R1-1							1																	
143	I-25 (Ramp 2) Frontage Rd	SS-10	R4-7							1																	
144	RAMP 2	SS-10	R2-1 (40)							1																	
						SHEET TOTALS	48.3	136.8	0.0	13	0	0	0	2	0	0	6	5	6	204	0	0	0	0	0	0	0	0

Stan 1:45:56 PM K:\08276\16311\Phase 2\Traffic_ITS\Drawings\16311TRAF_PH2_Signing_TAB_Sheet04.dgn
9/27/2010 CDOT-PDFDraftQuality_XM.pltcfg CDOT-PenTable.tbl

Print Date: 9/27/2010
File Name: 16311TRAF_PH2_Signing_TAB_Sheet04.dgn
Horiz. Scale: 1:1 Vert. Scale: As Noted
Unit Information Unit Leader Initials

FELSBURG HOLT & ULLEVIG 6300 South Syracuse Way Centennial, CO 80111

Sheet Revisions

Date:	Comments	Init.

Colorado Department of Transportation
2000 South Holly Street
Denver, CO 80222
Phone: 303-972-9112 FAX: 303-972-9114
Region 6 RLB

As Constructed
No Revisions:
Revised:
Void:

I-25/SANTA FE INTERCHANGE
TABULATION OF TRAFFIC SIGNS

Designer: LCL
Detailer: LCL
Sheet Subset: TRAFFIC
Structure Numbers
Subset Sheets: ST-4 of 7

Project No./Code
IM 0254-394
16311
Sheet Number 293

SIGNING TABULATION (Sheet 5 of 6)

SIGN NO.	LOCATION	PLAN SHEET	SIGN CODE	SIGN PANEL SIZE	BACKGROUND COLOR	REMARKS	SIGN PANEL (SF)			REMOVE GROUND SIGN	REMOVE GROUND SIGN (SPECIAL)	REMOVE OVERHEAD SIGN STRUCTURE	REMOVE SIGN PANEL	REMOVE FLASHING BEACON	RESET VARIABLE MESSAGE SIGN	RESET SIGN PANEL	STEEL SIGN POST								W8x18 BEAM	SIGN POST SPECIAL		CONC. FOOTING TYPE 3
							CLASS I	CLASS II	CLASS III								2.5-Inch Round (Post & Slipbase)				2 x 2-Inch Tubing							
																	EACH			LF	EACH			LF				
				W" x H"						EA	EACH	EA	EA	EACH	EA	EA	10'	12'	14'		13'	15'	17'		LF	EA	LF	EACH
145A	RAMP 2	SS-10	R2-1 (25)	36 x 48	WHITE	Mount Signs Back-to-Back		12.0										1		12							
145B			R5-1a	36 x 24	WHITE			6.0																			
146A	RAMP 2	SS-10	R2-1 (25)	36 x 48	WHITE	Mount Signs Back-to-Back		12.0										1		12							
146B			R5-1a	36 x 24	WHITE			6.0																			
147	I-25 (Ramp 2) Frontage Rd	SS-10	R3-2																								
148A	RAMP 2	SS-10	R6-1L	36 x 12	WHITE	Mount Back-to-Back with Sign 148B	3.0											1		12							
148B			R6-1R	36 x 12	WHITE	Mount Back-to-Back with Sign 148A	3.0																				
148C			R5-1	30 x 30	WHITE	Mount Below 148A/B	6.25																				
149A	RAMP 2	SS-10	R6-1L	36 x 12	WHITE	Mount Back-to-Back with Sign 149B	3.0											1		12							
149B			R6-1R	36 x 12	WHITE	Mount Back-to-Back with Sign 149A	3.0																				
149C			R5-1	30 x 30	WHITE	Mount Below 149A/B	6.25																				
150	RAMP 2	SS-10	R3-2	30 x 30	WHITE	Face towards Home Depot Egress	6.25										1			10							
151A	Home Depot Access	SS-10	R3-1	30 x 30	WHITE	Mount Signs Back-to-Back	6.25										1			10							
151B			R5-1	30 x 30	WHITE		6.25																				
152	Home Depot Access	SS-10	R3-5R	30 x 36	WHITE	Mount on Signal Span Wire	7.5																				
153	Home Depot Access	SS-10	R5-1	30 x 30	WHITE		6.3										1			10							
154	I-25 (Ramp 2) Frontage Rd	SS-10	R4-7							1																	
155	I-25 (Ramp 2) Frontage Rd	SS-10	W2-2							1																	
156	I-25 (Ramp 2) Frontage Rd	SS-10	W2-2							1																	
157	RAMP 2	SS-10	R3-7R	30 x 30	WHITE		6.25										1			10							
158	I-25 (Ramp 2) Frontage Rd	SS-10	R3-7R							1																	
159	I-25 (Ramp 2) Frontage Rd	SS-10	R1-1	36 x 36	RED		9.0										1			10							
160	Home Depot Access	SS-10	R1-1							1																	
161	Home Depot Access	SS-10	R3-7R	30 x 30	WHITE		6.25			1																	
162	RAMP 2	SS-10	R3-8 (SPECIAL)	48 x 30	WHITE			10.0									2			20							
163	RAMP 2	SS-10	R3-8 (SPECIAL)	48 x 30	WHITE			10.0									2			20							
164	I-25 (Ramp 2) Frontage Rd	SS-10	R4-7							1																	
165	I-25 (Ramp 2) Frontage Rd	SS-10	R4-7							1																	
166						Intentionally Left Blank																					
167						Intentionally Left Blank																					
168						Intentionally Left Blank																					
169						Intentionally Left Blank																					
170	RAMP 2 / Santa Fe Dr	SS-11	R3-5	30 x 36	WHITE	Mount on Signal Span Wire	7.5																				
171	RAMP 2 / Santa Fe Dr	SS-11	R3-5	30 x 36	WHITE	Mount on Signal Span Wire	7.5																				
172	RAMP 2 / Santa Fe Dr	SS-11	R3-8 (SPECIAL)	30 x 36	WHITE	Mount on Signal Span Wire	7.5																				
173	RAMP 2 / Santa Fe Dr	SS-11	R3-5R	30 x 36	WHITE	Mount on Signal Span Wire	7.5																				
174	RAMP 2 / Santa Fe Dr	SS-11	R3-5							1																	
175	SB Santa Fe Dr	SS-11	R4-7	24 x 30	WHITE		5.0										1			10							
176	NB Santa Fe Dr	SS-11	W4-1R							1																	
177	RAMP 2 / Santa Fe Dr	SS-11	R3-8										1														
178	NB Santa Fe Dr	SS-11	Route Assembly										3														
179	NB Santa Fe Dr	SS-11	R4-7	24 x 30	WHITE	Mount on Existing Post 178	5.0																				
180	RAMP 1 (Old Alignment)	SS-11	W4-1R							1																	
181	SB Santa Fe Dr	SS-11	Route Assembly							1																	
182	RAMP 2	SS-11	R4-7	30 x 36	WHITE		7.5										1			10							
183	RAMP 2	SS-11	R3-8							1																	
184	RAMP 2	SS-11	R3-8							1																	
185	RAMP 2	SS-11	Route Assembly							1																	
186	RAMP 2	SS-11	W3-2							1																	
						SHEET TOTALS	126.0	56.0	0.0	15	0	0	5	0	0	0	11	4	0	158	0	0	0	0	0	0	0	0

Stan 1:46:00 PM K:\08276\16311\Phase 2\Traffic_ITS\Drawings\16311TRAF_PH2_Signing_TAB_Sheet05.dgn
9/27/2010 CDOT-PDFDraftQuality_XM.pltcfg CDOT-PenTable.tbl

Print Date: 9/27/2010
File Name: 16311TRAF_PH2_Signing_TAB_Sheet05.dgn
Horiz. Scale: 1:1 Vert. Scale: As Noted
Unit Information Unit Leader Initials

FELSBURG HOLT & ULLEVIG 6300 South Syracuse Way Centennial, CO 80111

Sheet Revisions		
Date:	Comments	Init.

Colorado Department of Transportation
DOT DEPARTMENT OF TRANSPORTATION
2000 South Holly Street
Denver, CO 80222
Phone: 303-972-9112 FAX: 303-972-9114
Region 6 RLB

As Constructed
No Revisions:
Revised:
Void:

I-25/SANTA FE INTERCHANGE
TABULATION OF TRAFFIC SIGNS

Designer: LCL
Detailer: LCL
Sheet Subset: TRAFFIC
Structure Numbers
Subset Sheets: ST-5 of 7

Project No./Code
IM 0254-394
16311
Sheet Number 294

SIGNING TABULATION (Sheet 6 of 6)

SIGN NO.	LOCATION	PLAN SHEET	SIGN CODE	SIGN PANEL SIZE	BACKGROUND COLOR	REMARKS	SIGN PANEL (SF)			REMOVE GROUND SIGN	REMOVE GROUND SIGN (SPECIAL)	REMOVE OVERHEAD SIGN STRUCTURE	REMOVE SIGN PANEL	REMOVE FLASHING BEACON	RESET VARIABLE MESSAGE SIGN	RESET SIGN PANEL	STEEL SIGN POST									SIGN POST SPECIAL		CONC. FOOTING TYPE 3
							CLASS I	CLASS II	CLASS III								2.5-Inch Round (Post & Slipbase)				2 x 2-Inch Tubing				W8x18 BEAM			
																	EACH			LF	EACH			LF				
				W" x H"						EA	EACH	EA	EA	EACH	EA	EA	10'	12'	14'		13'	15'	17'		LF	EA	LF	EACH
187	RAMP 2	SS-11	Route Assembly							1																		
188A	RAMP 2	SS-11	M3-3	24 x 12	WHITE			2.0																				
188B			M1-4 (85)	24 x 24	WHITE			4.0																				
188C			M6-1	21 x 15	WHITE			2.2																				
188D	RAMP 2	SS-11	M3-3i	24 x 12	BLUE			2.0																				
188E			M1-1A (25)	24 x 24	BLUE	Post Includes U-Bracket		4.0										1		12								
188F			M6-1i	21 x 15	BLUE			2.2																				
188G	RAMP 2	SS-11	M3-1i	24 x 12	BLUE			2.0																				
188H			M1-1A (25)	24 x 24	BLUE			4.0																				
188I			M6-1i	21 x 15	BLUE			2.2																				
189	RAMP 2	SS-11	R1-2							1																		
190	RAMP 2	SS-11	R1-2							1																		
191	RAMP 2	SS-11	R5-1							1																		
SHEET TOTALS							0.0	24.6	0.0	4	0	0	0	0	0	0	0	1	0	12	0	0	0	0	0	0	0	0
PROJECT TOTALS							180.6	773.3	3188.0	57	6	4	15	2	1	1	18	23	18	708	0	0	0	0	35	1	12	2

Print Date: 9/27/2010
File Name: 16311TRAF_PH2_Signing_TAB_Sheet06.dgn
Horiz. Scale: 1:1 Vert. Scale: As Noted
Unit Information Unit Leader Initials

FELSBURG HOLT & ULLEVIG 6300 South Syracuse Way Centennial, CO 80111

Sheet Revisions

Date:	Comments	Init.

Colorado Department of Transportation
DEPARTMENT OF TRANSPORTATION
2000 South Holly Street
Denver, CO 80222
Phone: 303-972-9112 FAX: 303-972-9114
Region 6 RLB

As Constructed
No Revisions:
Revised:
Void:

I-25/SANTA FE INTERCHANGE
TABULATION OF TRAFFIC SIGNS

Designer: LCL
Detailer: LCL
Sheet Subset: TRAFFIC
Structure Numbers
Subset Sheets: ST-6 of 7

Project No./Code
IM 0254-394
16311
Sheet Number 295

Stan 1:46:04 PM K:\08276\16311\Phase 2\Traffic_ITS\Drawings\16311TRAF_PH2_Signing_TAB_Sheet06.dgn
9/27/2010 CDOT-PDFDraftQuality_XM.pltcfg CDOT-PenTable.tbl

TABULATION OF OVERHEAD GUIDE SIGNS

SIGN NO.	LOCATION	STATION; OFFSET (Post Locations)	SIGN DESCRIPTION	SIGN PANEL SIZE	SIGN PANEL (CLASS III)	STRUCTURE TYPE	STRUCTURE NUMBER	NO. OF POSTS	PIPE POST			SPAN LENGTH	CAISSON DEPTH	DRILLED CAISSON		
									OUTER DIAMETER	HEIGHT "H"	RADIUS "R"			42" DIAM.	48" DIAM	54" DIAM
				W' x H'	SF				INCHES	FT - IN	FT	FT - IN	FT	(PAY LENGTH) FT		
1A	NB SANTA FE DRIVE	698+80, 23.2' LT	I-25 Advance	12 x 12	144.0	BRIDGE		1	20	23' - 6"	10	82' - 0""	22.0			23.5
1B		698+80, 58.8' RT	Guide Signs	21 x 12	252.0			1	20	23' - 6"	10		22.0			23.5
8A	NB SANTA FE DRIVE	712+00, 23.75' LT	Junction I-25	12 x 12	144.0	BRIDGE		1	20	23' - 6"	10	80' - 0""	22.0			23.5
8B		712+00, 56.25' RT	Exit Guide Signs	20 x 12	240.0			1	20	23' - 6"	10		22.0			23.0
12A	NB I-25	622+22; 92.4' R	Santa Fe Drive	10 x 2.5	25.0	CANTILEVER		1	24	30' - 0"	10	28' - 0"	20.0		25.5	
12B			Exit Guide Signs	16 x 12	192.0											
10A	SB I-25	622+00, 82' LT	EXIT 206	9 x 2.5	22.5	BRIDGE		1	20	23' - 6"	10	82' - 0"	22.0			25.5
10B			Washington/Emerson	17 x 8	136.0											
10C		622+00, 0' RT	EXIT 207A	10 x 2.5	25.0			1	20	22' - 6"	10		22.0			27.75
10D			Broadway	12 x 8	96.0											
19A	SB I-25	645+51, 130' LT	EXIT 207A	10 x 2.5	25.0	BRIDGE		1	24	18' - 0"	12	130' - 0"	24.0			26.0
19B			Broadway	12 x 10	120.0											
19C		645+51, 0' RT	EXIT 207B	10 x 2.5	25.0			1	24	19' - 0"	12		24.0			27.25
19D			Santa Fe Drive	16 x 10	160.0											
PROJECT TOTALS														0	25.5	200.0

Stan 1:46:08 PM K:\08276\16311\Phase 2\Traffic_ITS\Drawings\16311TRAF_PH2_Signing_TAB_Sheet07.dgn
9/27/2010 CDOT-PDFDraftQuality_XM.pltcfg CDOT-PenTable.tbl

Print Date: 9/27/2010
File Name: 16311TRAF_PH2_Signing_TAB_Sheet07.dgn
Horiz. Scale: 1:1 Vert. Scale: As Noted
Unit Information Unit Leader Initials

FELSBURG HOLT & ULLEVIG 6300 South Syracuse Way Centennial, CO 80111

Sheet Revisions

Date:	Comments	Init.

Colorado Department of Transportation
2000 South Holly Street
Denver, CO 80222
Phone: 303-972-9112 FAX: 303-972-9114
Region 6 RLB

As Constructed
No Revisions:
Revised:
Void:

I-25/SANTA FE INTERCHANGE
TABULATION OF TRAFFIC SIGNS

Designer: LCL
Detailer: LCL
Sheet Subset: TRAFFIC
Structure Numbers
Subset Sheets: ST-7 of 7

Project No./Code
IM 0254-394
16311
Sheet Number 296

PAVEMENT MARKING TABULATION (Sheet 1 of 1)

LOCATION	STATION	DISTANCE (FT)	JURISDICTION	EPOXY PAVEMENT MARKING LINES - LINEAR FEET								PREFORMED PLASTIC PAVEMENT MARKING LINES - LF (I-25 Mainline and Ramps)					PREFORMED PLASTIC PAVEMENT MARKING (TYPE III)	
				EDGE		CENTER	CHANNELIZING	LANE	DOTTED			LANE		CHANNELIZING	LANE DROP			
				WHITE SOLID	YELLOW SOLID	DOUBLE YELLOW SOLID	WHITE SOLID	WHITE BROKEN	WHITE BROKEN	YELLOW BROKEN	WHITE BROKEN	WHITE BROKEN (TYPE I)	WHITE BROKEN (TYPE II) (CONTRAST)	WHITE SOLID (TYPE II) (CONTRAST)	WHITE BROKEN (TYPE I)	WHITE BROKEN (TYPE II) (CONTRAST)	WORD - SYMBOL	XWALK - STOPLINE
				4 INCH	4 INCH	4 INCH	8 INCH	4 INCH	4 INCH	4 INCH	8 INCH	4 INCH	7 INCH	11 INCH	8 INCH	11 INCH	SF	SF
NB I-25	south of 619+60	varies	CDOT	1202	404								1180	143		1061		
NB I-25	619+60 to 634+87	1527	CDOT	881	1527								4581	594				
NB I-25	634+87 to 648+95	1408	CDOT	1408	1408								4224					
NB I-25	648+95 to 657+50	855	CDOT	755	855								3376					
SB I-25	south of 619+60	varies	CDOT	330	416								1592					
SB I-25	619+60 to 634+87	1527	CDOT	1527	1527								4581					
SB I-25	634+87 to 651+00	1613	CDOT	1613	1223								4839	390				
SB I-25	651+00 to 662+68	1168	CDOT	1067	1168								3504	101		1168		
SB I-25	north of 662+68	varies	CDOT	794	692								2824	328				
RAMP 1	Gore to110+20	varies	CDOT	330										997				
RAMP 1	110+20 to 136+00	2580	CDOT	2580	2580								2580					
RAMP 1	136+00 to Gore	varies	CDOT	527										470				
RAMP 2	200+00 to 205+84	584	CDOT	584										434				
RAMP 2	205+84 to 213+60	varies	CDOT	824	796			496			128			364			46.5	88
RAMP 2	213+60 to 220+00	varies	CDOT	549	297			265	99					378			108.5	69
Home Depot	90+00 to Santa Fe	varies	CDOT	464	301	240	299	169	158	70							31	78
Frontage	s/o Home Depot Access		DENVER	495		365												
RAMP 3	300+00 to 310+00	varies	CDOT	890	674								447	496			12	
RAMP 4	397+00 to 399+17	varies	CDOT	186			232	157										
RAMP 4	399+17 to 416+86	1769	CDOT	1769	1769			1769										
RAMP 4	416+86 to Gore	varies	CDOT	527										917				
NB SANTA FE	703+85 to 713+60	975	DENVER		107		975	975			675			300			20	
NB SANTA FE	713+60 to 724+30	1070	DENVER	558	1070		1441	1070						371			51	72
NB SANTA FE	724+30 to 738+75	varies	DENVER	985	418	871	256	2890			151						31	68
NB SANTA FE	738+75 to 746+47	varies	DENVER	695			521	1436										
SB SANTA FE	805+00 to 808+25	325	DENVER		325		325	650										
SB SANTA FE	808+25 to 822+34	varies	DENVER	1409	563	872	540	1409			540						46.5	30
SB SANTA FE	822+34 to 833+27	varies	DENVER	1072	432		526	1960									46.5	96
TOTAL (LINEAR FEET)				**24021**	**18552**	**2348**	**5115**	**13246**	**257**	**70**	**1494**	**0**	**33728**	**6283**	**0**	**2229**		
TOTAL (SQ.FT.)				**8007.0**	**6184.0**	**1565.3**	**3410.0**	**1103.8**	**28.6**	**7.8**	**332.0**	**0.0**	**4918.7**	**5759.4**	**0.0**	**408.7**	**393.0**	**501.0**
TOTAL (GALLONS)				**80.1**	**61.8**	**15.7**	**34.1**	**11.0**	**0.3**	**0.1**	**3.3**							

	EPOXY PAVEMENT MARKING (GAL)		PREFORMED PLASTIC PAVEMENT MARKING (TYPE II) (CONTRAST) (INLAID)
	YELLOW	WHITE	SF
PROJECT TOTALS	78.0	129.0	11086.7
	207.0		

Print Date: 9/27/2010
File Name: 16311TRAF_PH2_PavementMarking_TAB_Sheet01.dgn
Horiz. Scale: 1:1 Vert. Scale: As Noted
Unit Information Unit Leader Initials

FELSBURG HOLT & ULLEVIG 6300 South Syracuse Way Centennial, CO 80111

Sheet Revisions		
Date:	Comments	Init.

Colorado Department of Transportation
DEPARTMENT OF TRANSPORTATION
2000 South Holly Street
Denver, CO 80222
Phone: 303-972-9112 FAX: 303-972-9114
Region 6 RLB

As Constructed
No Revisions:
Revised:
Void:

I-25/SANTA FE INTERCHANGE
TABULATION OF
PAVEMENT MARKINGS

Designer: LCL
Detailer: LCL
Sheet Subset: TRAFFIC
Structure Numbers
Subset Sheets: PMT-1 of 1

Project No./Code
IM 0254-394
16311
Sheet Number 297

Stan 1:46:11 PM K:\08276\16311\Phase 2\Traffic_ITS\Drawings\16311TRAF_PH2_PavementMarking_TAB_Sheet01.dgn
9/27/2010 CDOT-PDFDraftQuality_XM.pltcfg CDOT-PenTable.tbl

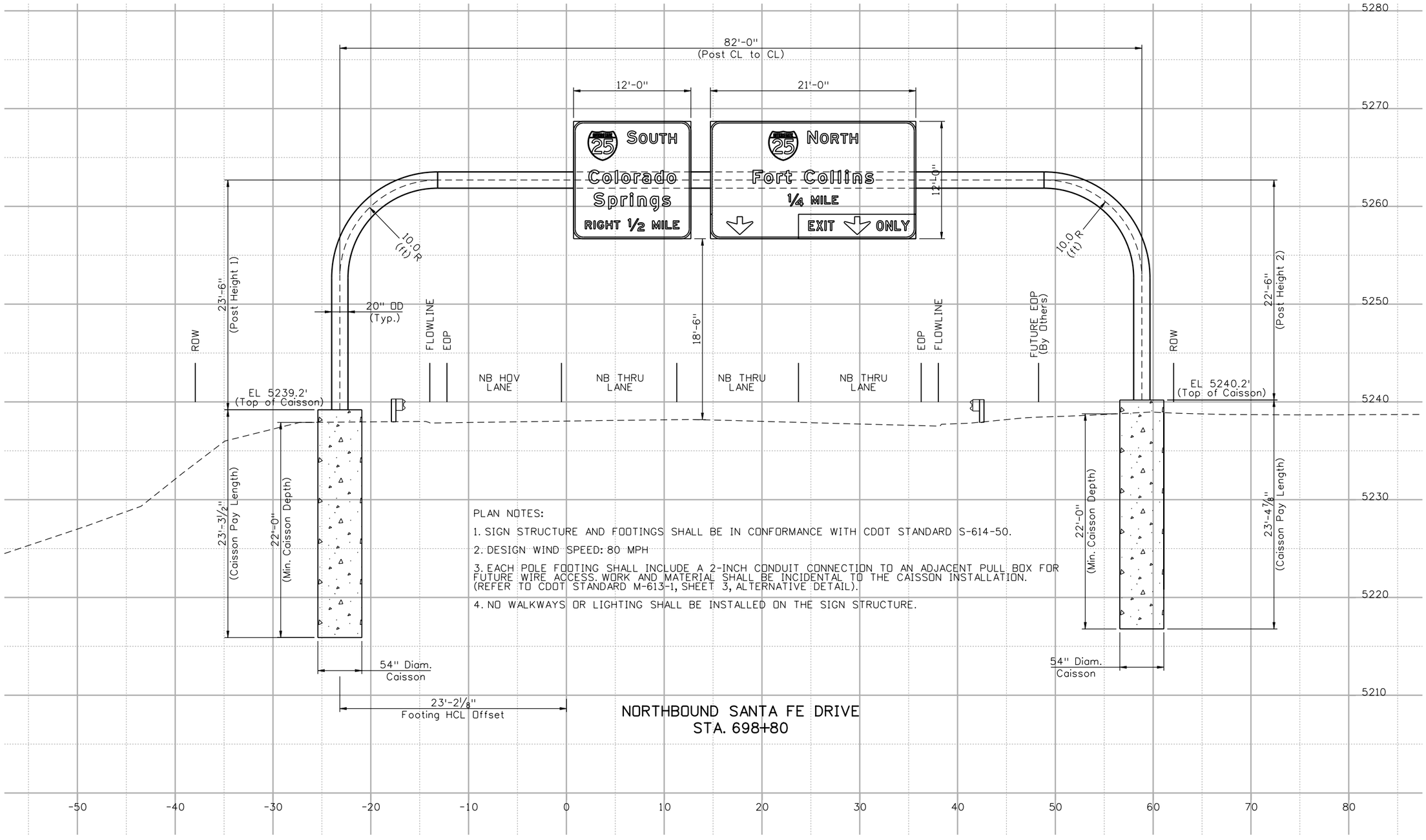

PLAN NOTES:

1. SIGN STRUCTURE AND FOOTINGS SHALL BE IN CONFORMANCE WITH CDOT STANDARD S-614-50.
2. DESIGN WIND SPEED: 80 MPH
3. EACH POLE FOOTING SHALL INCLUDE A 2-INCH CONDUIT CONNECTION TO AN ADJACENT PULL BOX FOR FUTURE WIRE ACCESS. WORK AND MATERIAL SHALL BE INCIDENTAL TO THE CAISSON INSTALLATION. (REFER TO CDOT STANDARD M-613-1, SHEET 3, ALTERNATIVE DETAIL).
4. NO WALKWAYS OR LIGHTING SHALL BE INSTALLED ON THE SIGN STRUCTURE.

NORTHBOUND SANTA FE DRIVE
STA. 698+80

Print Date: 9/28/2010
File Name: 16311TRAF_PH2_GuideSign_Section1.dgn
Horiz. Scale: 1:10 Vert. Scale: As Noted
Unit Information Unit Leader Initials

FELSBURG HOLT & ULLEVIG 6300 South Syracuse Way Centennial, CO 80111

Sheet Revisions		
Date:	Comments	Init.

Colorado Department of Transportation
DOT DEPARTMENT OF TRANSPORTATION
2000 South Holly Street
Denver, CO 80222
Phone: 303-972-9112 FAX: 303-972-9114
Region 6 RLB

As Constructed
No Revisions:
Revised:
Void:

I-25/SANTA FE INTERCHANGE
GUIDE SIGN CROSS SECTION
STA. 698+80 (NB SANTA FE)

Designer: LCL
Detailer: LCL
Sheet Subset: TRAFFIC
Structure Numbers:
Subset Sheets: S-1 of 6

Project No./Code
IM 0254-394
16311
Sheet Number 298

Stan 5:55:13 AM K:\08276\16311\Phase 2\Traffic_ITS\Drawings\16311TRAF_PH2_GuideSign_Section1.dgn
9/28/2010 CDOT-PDFDraftQuality_XM.pltcfg CDOT-PenTable.tbl

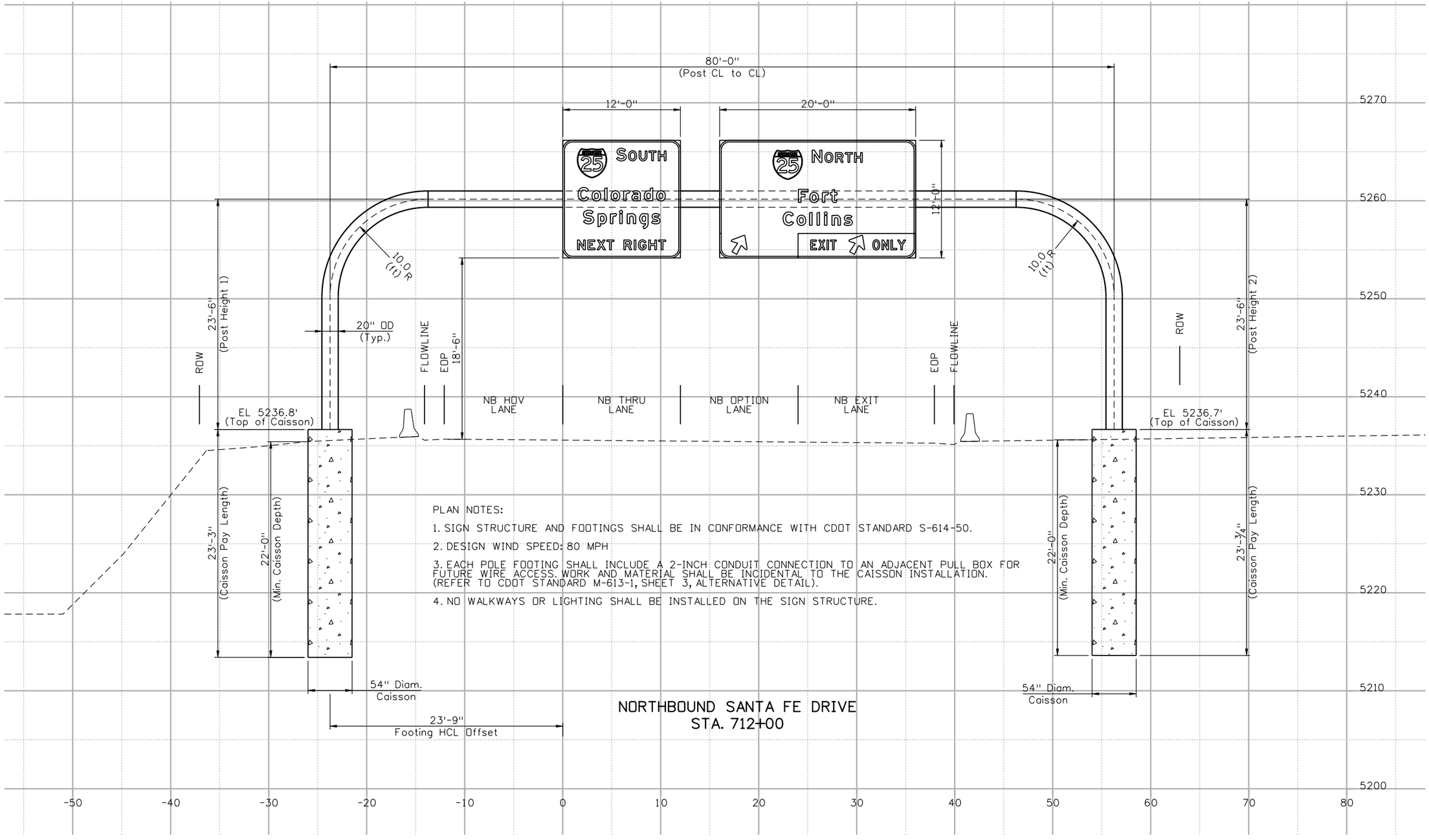

PLAN NOTES:

1. SIGN STRUCTURE AND FOOTINGS SHALL BE IN CONFORMANCE WITH CDOT STANDARD S-614-50.
2. DESIGN WIND SPEED: 80 MPH
3. EACH POLE FOOTING SHALL INCLUDE A 2-INCH CONDUIT CONNECTION TO AN ADJACENT PULL BOX FOR FUTURE WIRE ACCESS. WORK AND MATERIAL SHALL BE INCIDENTAL TO THE CAISSON INSTALLATION. (REFER TO CDOT STANDARD M-613-1, SHEET 3, ALTERNATIVE DETAIL).
4. NO WALKWAYS OR LIGHTING SHALL BE INSTALLED ON THE SIGN STRUCTURE.

NORTHBOUND SANTA FE DRIVE
STA. 712+00

Print Date: 9/28/2010
File Name: 16311TRAF_PH2_GuideSign_Section2.dgn
Horiz. Scale: 1:10 Vert. Scale: As Noted
Unit Information Unit Leader Initials

FELSBURG HOLT & ULLEVIG 6300 South Syracuse Way Centennial, CO 80111

Sheet Revisions		
Date:	Comments	Init.

Colorado Department of Transportation
DOT DEPARTMENT OF TRANSPORTATION
2000 South Holly Street
Denver, CO 80222
Phone: 303-972-9112 FAX: 303-972-9114
Region 6 RLB

As Constructed
No Revisions:
Revised:
Void:

I-25/SANTA FE INTERCHANGE
GUIDE SIGN CROSS SECTION
STA 712+00 (NB SANTA FE)

Designer: LCL
Detailer: LCL
Sheet Subset: TRAFFIC
Structure Numbers:
Subset Sheets: S-2 of 6

Project No./Code
IM 0254-394
16311
Sheet Number 299

Stan 5:55:57 AM K:\08276\16311\Phase 2\Traffic_ITS\Drawings\16311TRAF_PH2_GuideSign_Section2.dgn
9/28/2010 CDOT-PDFDraftQuality_XM.pltcfg CDOT-PenTable.tbl

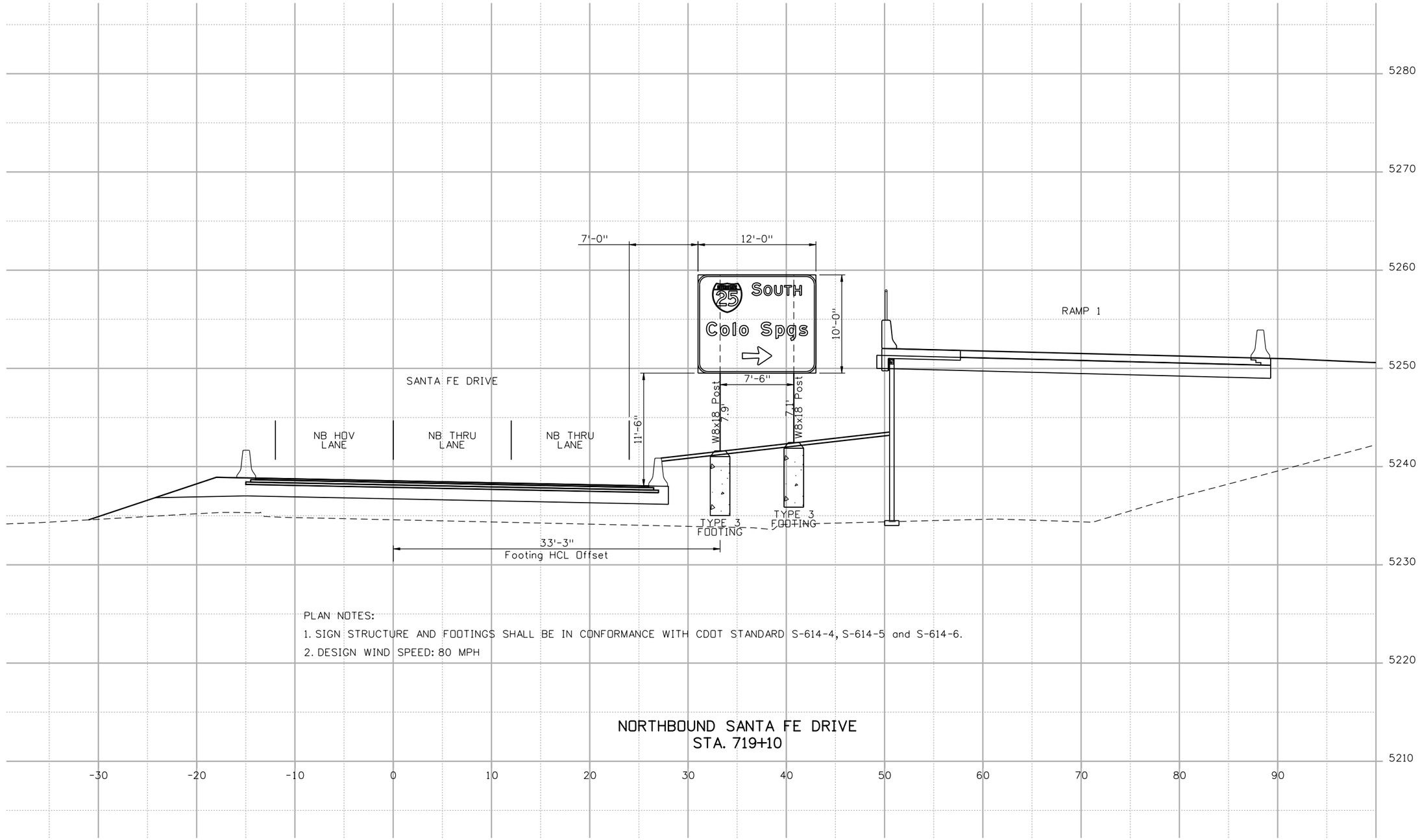

PLAN NOTES:

1. SIGN STRUCTURE AND FOOTINGS SHALL BE IN CONFORMANCE WITH CDOT STANDARD S-614-4, S-614-5 and S-614-6.
2. DESIGN WIND SPEED: 80 MPH

NORTHBOUND SANTA FE DRIVE
STA. 719+10

Print Date: 9/28/2010	Sheet Revisions	Colorado Department of Transportation	As Constructed
File Name: 16311TRAF_PH2_GuideSign_Section3.dgn	Date: / Comments / Init.	2000 South Holly Street, Denver, CO 80222	No Revisions:
Horiz. Scale: 1:10 Vert. Scale: As Noted		Phone: 303-972-9112 FAX: 303-972-9114	Revised:
Unit Information Unit Leader Initials		Region 6 RLB	Void:
FELSBURG HOLT & ULLEVIG 6300 South Syracuse Way, Centennial, CO 80111			

I-25/SANTA FE INTERCHANGE GUIDE SIGN CROSS SECTION STA. 719+00 (NB SANTA FE)			Project No./Code
Designer: LCL	Structure Numbers		IM 0254-394
Detailer: LCL			16311
Sheet Subset: TRAFFIC	Subset Sheets: S-3 of 6		Sheet Number 300

Stan 5:56:40 AM K:\08276\16311\Phase 2\Traffic_ITS\Drawings\16311TRAF_PH2_GuideSign_Section3.dgn
9/28/2010 CDOT-PDFDraftQuality_XM.pltcfg CDOT-PenTable.tbl

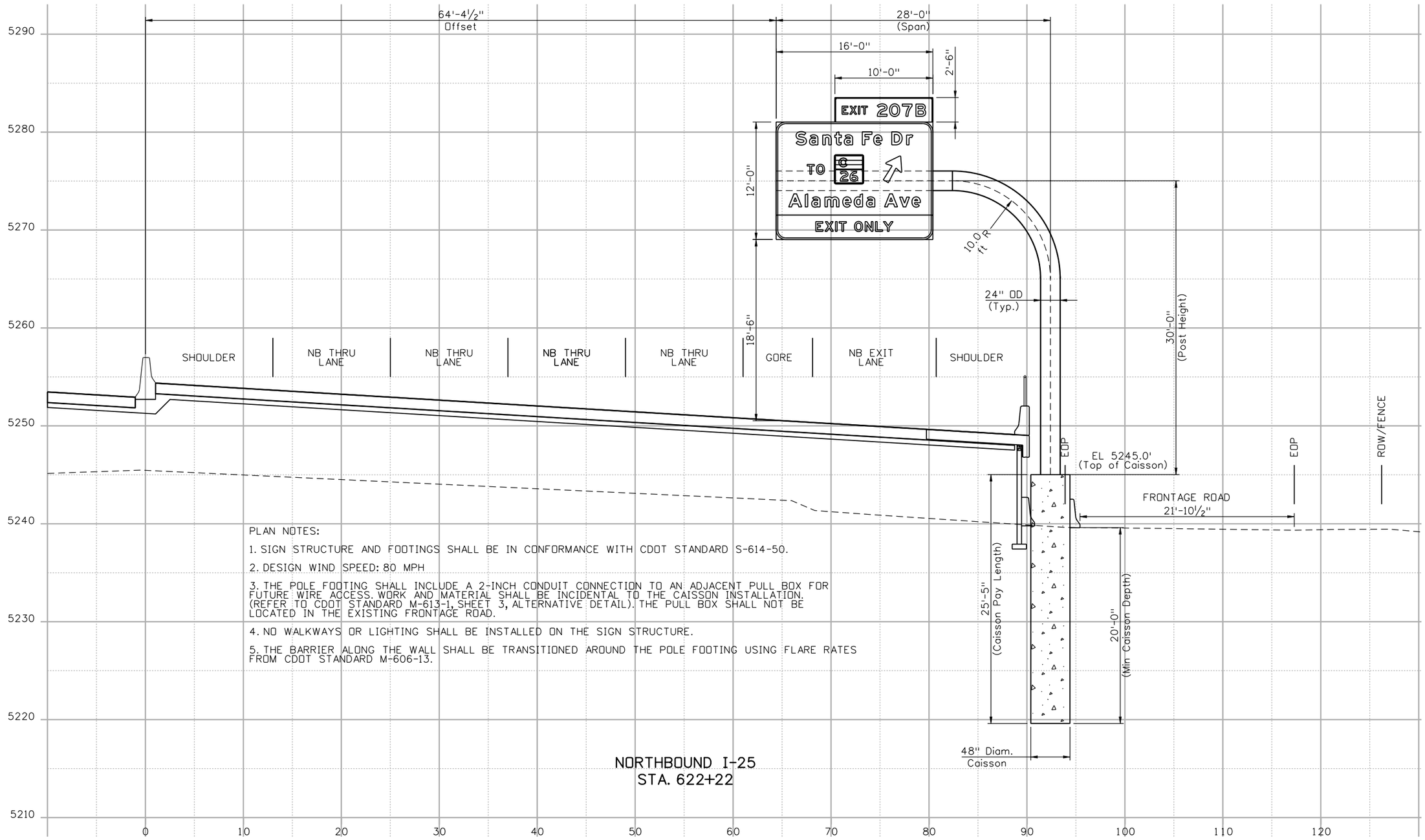

PLAN NOTES:

1. SIGN STRUCTURE AND FOOTINGS SHALL BE IN CONFORMANCE WITH CDOT STANDARD S-614-50.
2. DESIGN WIND SPEED: 80 MPH
3. THE POLE FOOTING SHALL INCLUDE A 2-INCH CONDUIT CONNECTION TO AN ADJACENT PULL BOX FOR FUTURE WIRE ACCESS. WORK AND MATERIAL SHALL BE INCIDENTAL TO THE CAISSON INSTALLATION. (REFER TO CDOT STANDARD M-613-1, SHEET 3, ALTERNATIVE DETAIL). THE PULL BOX SHALL NOT BE LOCATED IN THE EXISTING FRONTAGE ROAD.
4. NO WALKWAYS OR LIGHTING SHALL BE INSTALLED ON THE SIGN STRUCTURE.
5. THE BARRIER ALONG THE WALL SHALL BE TRANSITIONED AROUND THE POLE FOOTING USING FLARE RATES FROM CDOT STANDARD M-606-13.

NORTHBOUND I-25
STA. 622+22

Print Date: 9/28/2010
File Name: 16311TRAF_PH2_GuideSign_Section4.dgn
Horiz. Scale: 1:10 Vert. Scale: As Noted
Unit Information Unit Leader Initials

FELSBURG HOLT & ULLEVIG 6300 South Syracuse Way Centennial, CO 80111

Sheet Revisions		
Date:	Comments	Init.

Colorado Department of Transportation
DEPARTMENT OF TRANSPORTATION
2000 South Holly Street
Denver, CO 80222
Phone: 303-972-9112 FAX: 303-972-9114
Region 6 RLB

As Constructed
No Revisions:
Revised:
Void:

I-25/SANTA FE INTERCHANGE
GUIDE SIGN CROSS SECTION
STA. 622+22 (NB I-25)

Designer: LCL
Detailer: LCL
Sheet Subset: TRAFFIC
Structure Numbers:
Subset Sheets: S-4 of 6

Project No./Code
IM 0254-394
16311
Sheet Number 301

Stan 5:57:09 AM K:\08276\16311\Phase 2\Traffic_ITS\Drawings\16311TRAF_PH2_GuideSign_Section4.dgn
9/28/2010 CDOT-PDFDraftQuality_XM.pltcfg CDOT-PenTable.tbl

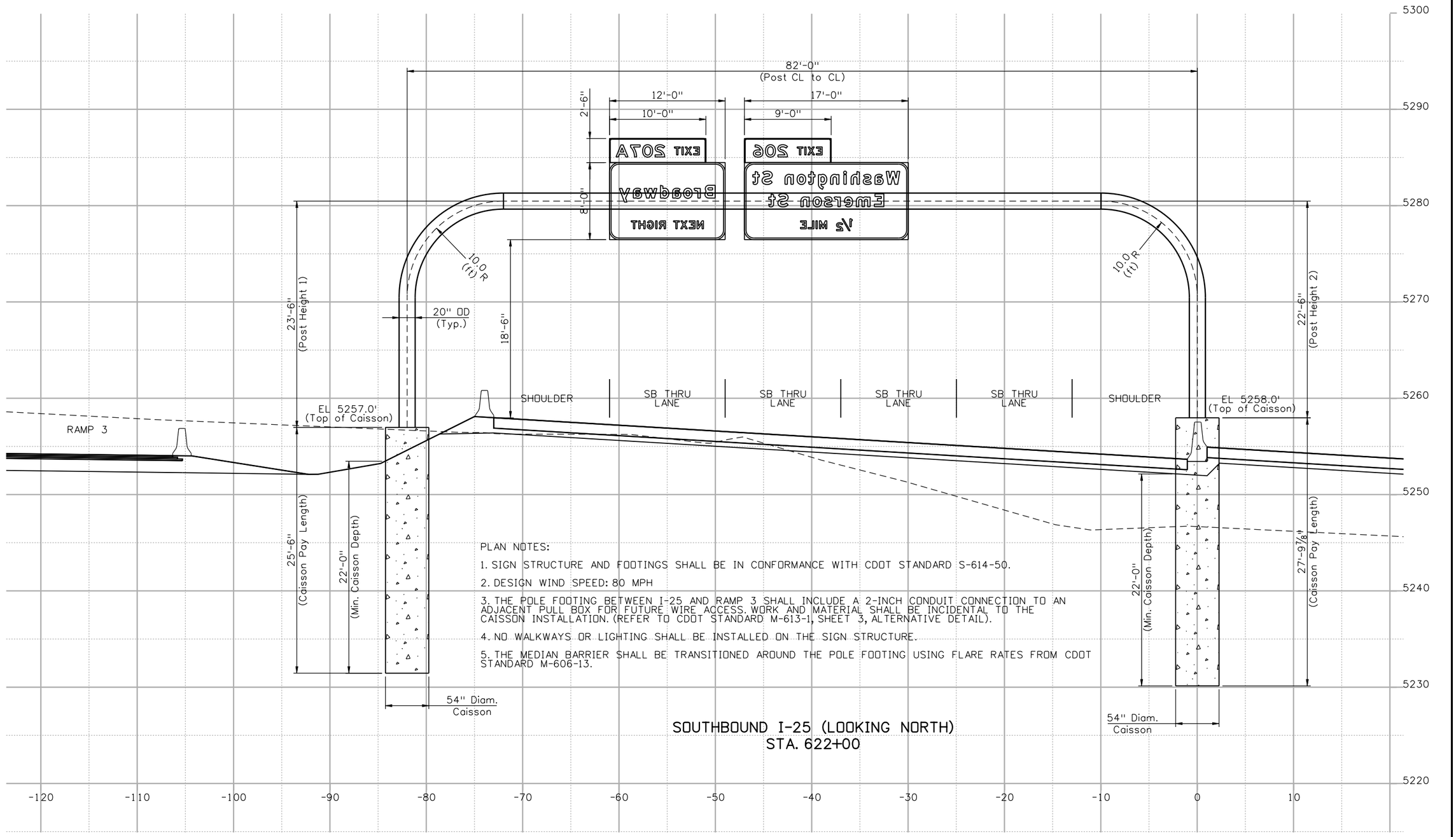

PLAN NOTES:

1. SIGN STRUCTURE AND FOOTINGS SHALL BE IN CONFORMANCE WITH CDOT STANDARD S-614-50.
2. DESIGN WIND SPEED: 80 MPH
3. THE POLE FOOTING BETWEEN I-25 AND RAMP 3 SHALL INCLUDE A 2-INCH CONDUIT CONNECTION TO AN ADJACENT PULL BOX FOR FUTURE WIRE ACCESS. WORK AND MATERIAL SHALL BE INCIDENTAL TO THE CAISSON INSTALLATION. (REFER TO CDOT STANDARD M-613-1, SHEET 3, ALTERNATIVE DETAIL).
4. NO WALKWAYS OR LIGHTING SHALL BE INSTALLED ON THE SIGN STRUCTURE.
5. THE MEDIAN BARRIER SHALL BE TRANSITIONED AROUND THE POLE FOOTING USING FLARE RATES FROM CDOT STANDARD M-606-13.

SOUTHBOUND I-25 (LOOKING NORTH)
STA. 622+00

Print Date: 9/28/2010
File Name: 16311TRAF_PH2_GuideSign_Section5.dgn
Horiz. Scale: 1:10 Vert. Scale: As Noted
Unit Information Unit Leader Initials

FELSBURG HOLT & ULLEVIG 6300 South Syracuse Way Centennial, CO 80111

Sheet Revisions		
Date:	Comments	Init.

Colorado Department of Transportation
DOT DEPARTMENT OF TRANSPORTATION
2000 South Holly Street
Denver, CO 80222
Phone: 303-972-9112 FAX: 303-972-9114
Region 6 RLB

As Constructed
No Revisions:
Revised:
Void:

I-25/SANTA FE INTERCHANGE
GUIDE SIGN CROSS SECTION
STA. 622+00 (SB I-25)

Designer: LCL
Detailer: LCL
Sheet Subset: TRAFFIC
Structure Numbers:
Subset Sheets: S-5 of 6

Project No./Code
IM 0254-394
16311
Sheet Number 302

Stan 5:58:05 AM K:\08276\16311\Phase 2\Traffic_ITS\Drawings\16311TRAF_PH2_GuideSign_Section5.dgn
9/28/2010 CDOT-PDFDraftQuality_XM.pltcfg CDOT-PenTable.tbl

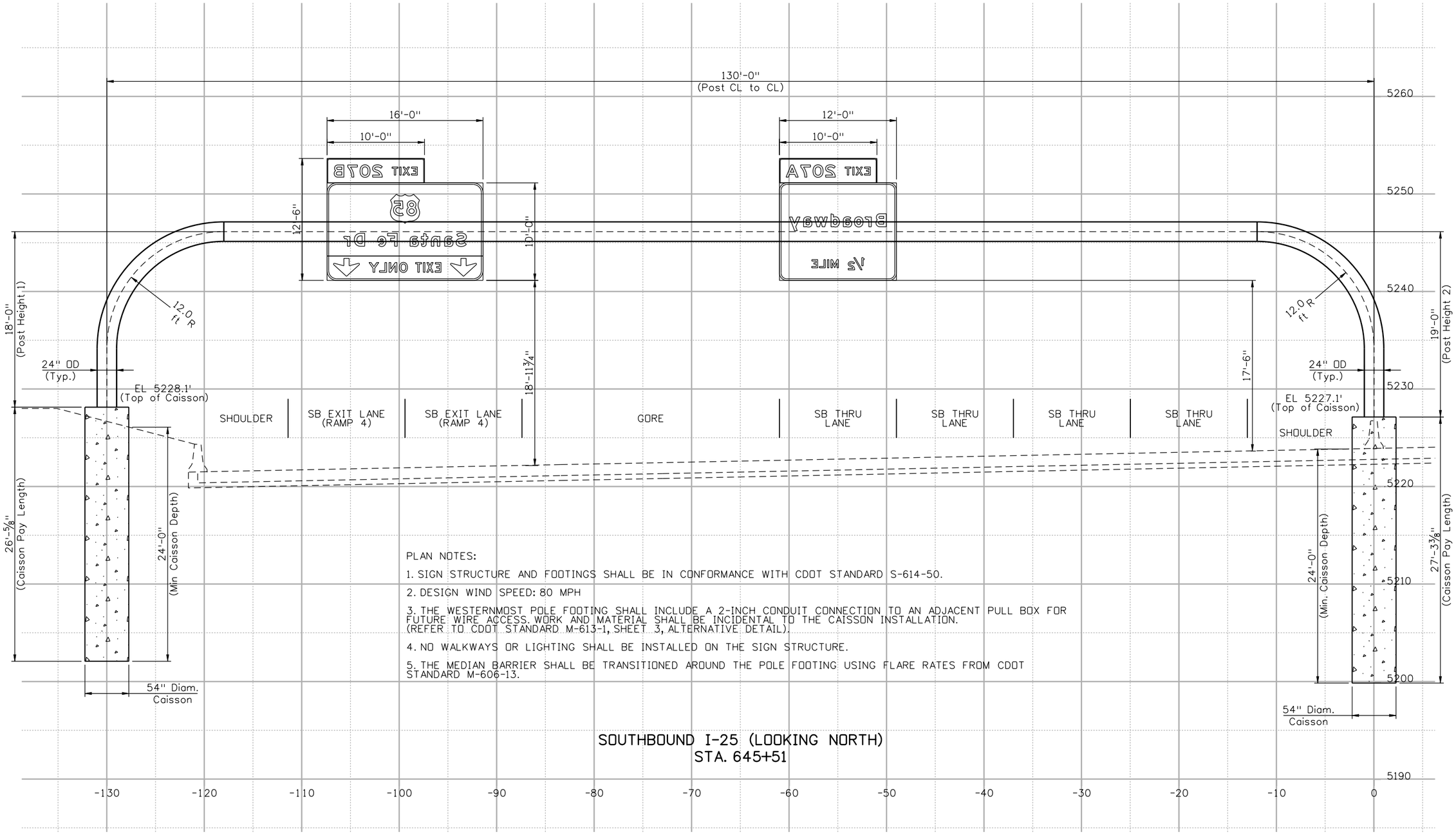

PLAN NOTES:

1. SIGN STRUCTURE AND FOOTINGS SHALL BE IN CONFORMANCE WITH CDOT STANDARD S-614-50.
2. DESIGN WIND SPEED: 80 MPH
3. THE WESTERNMOST POLE FOOTING SHALL INCLUDE A 2-INCH CONDUIT CONNECTION TO AN ADJACENT PULL BOX FOR FUTURE WIRE ACCESS. WORK AND MATERIAL SHALL BE INCIDENTAL TO THE CAISSON INSTALLATION. (REFER TO CDOT STANDARD M-613-1, SHEET 3, ALTERNATIVE DETAIL).
4. NO WALKWAYS OR LIGHTING SHALL BE INSTALLED ON THE SIGN STRUCTURE.
5. THE MEDIAN BARRIER SHALL BE TRANSITIONED AROUND THE POLE FOOTING USING FLARE RATES FROM CDOT STANDARD M-606-13.

SOUTHBOUND I-25 (LOOKING NORTH)
STA. 645+51

Stan 5:58:33 AM K:\08276\16311\Phase 2\Traffic_ITS\Drawings\16311TRAF_PH2_GuideSign_Section6.dgn
9/28/2010 CDOT-PDFDraftQuality_XM.pltcfg CDOT-PenTable.tbl

Print Date: 9/28/2010			
File Name: 16311TRAF_PH2_GuideSign_Section6.dgn			
Horiz. Scale: 1:10	Vert. Scale: As Noted		
Unit Information	Unit Leader Initials		

FELSBURG HOLT & ULLEVIG
6300 South Syracuse Way
Centennial, CO 80111

Sheet Revisions

Date:	Comments	Init.

Colorado Department of Transportation
DEPARTMENT OF TRANSPORTATION
2000 South Holly Street
Denver, CO 80222
Phone: 303-972-9112 FAX: 303-972-9114
Region 6 RLB

As Constructed	
No Revisions:	
Revised:	
Void:	

I-25/SANTA FE INTERCHANGE
GUIDE SIGN CROSS SECTION
STA. 645+51 (SB I-25)

Designer:	LCL	Structure Numbers	
Detailer:	LCL		
Sheet Subset:	TRAFFIC	Subset Sheets:	S-6 of 6

Project No./Code	
IM 0254-394	
16311	
Sheet Number	303

SIGN #1A

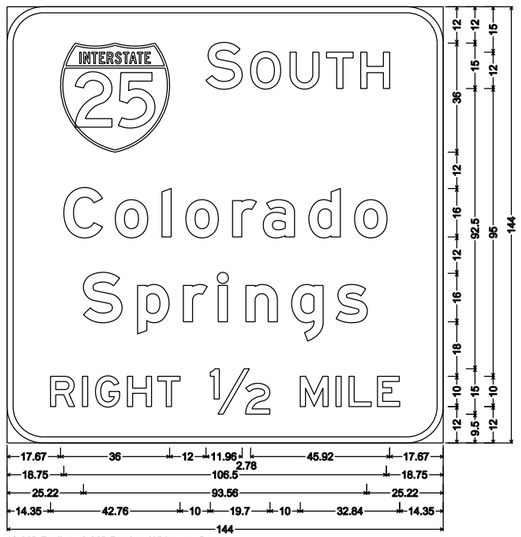

12.00" Radius, 2.00" Border, White on Green;
"SOUTH" E; "Colorado" E Mod; "Springs" E Mod; "RIGHT ½ MILE" E;
Table of letter and object lefts.

C 17.67	S 65.67	O 80.41	U 93.44	T 105.48	H 116.76	
C 18.75	o 35.74	l 51.15	o 59.05	r 74.46	a 84.61	d 99.65	o 114.75
S 25.22	p 43.10	r 58.21	i 69.73	n 78.86	g 93.97	s 108.65	
R 14.35	I 24.89	G 29.19	H 39.74	T 49.77	½ 67.11	M 96.81	I 106.61	L 112.90	E 122.31

SIGN #1B

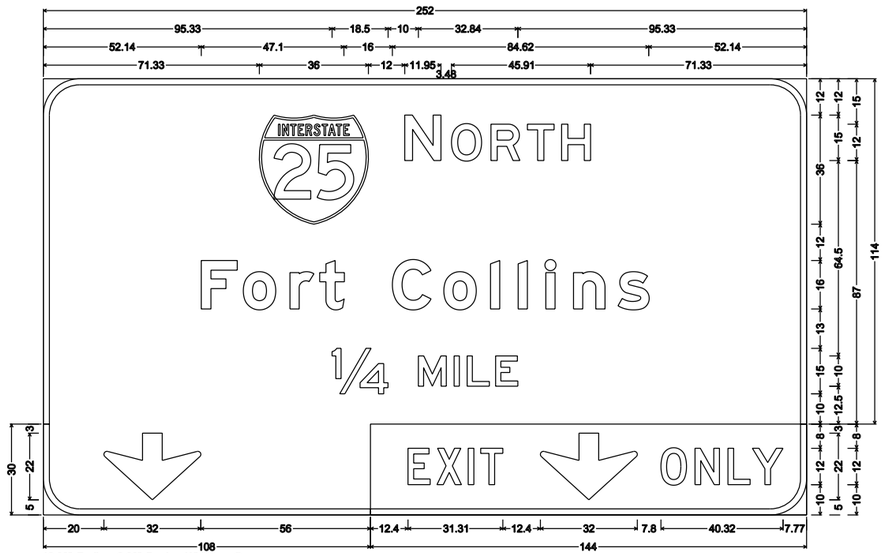

12.00" Radius, 2.00" Border, White on Green;
"NORTH" E; "Fort Collins" E Mod; "¼ MILE" E;
12.00" Radius, 2.00" Border, White on Green;
Down Arrow AR-C1 - 22.00" 270°;
12.00" Radius, 2.00" Border, White on Yellow;
"EXIT" Black D; Down Arrow AR-C1 - 22.00" 270° Black; "ONLY" Black D;
Table of letter and object lefts.

N 71.33	N 119.33	O 134.76	R 147.79	T 159.83	H 171.11	
F 52.14	o 66.03	r 81.43	t 91.24	C 115.24	o 132.24	l 147.64	l 156.78	l 165.91	n 175.05	s 189.73
¼ 95.33	M 123.83	I 135.63	L 139.92	E 149.33		
20.00						
E 12.40	X 21.96	I 32.27	T 36.40	56.11	O 95.91	M 107.16	L 118.04	Y 126.10	

SIGN #3

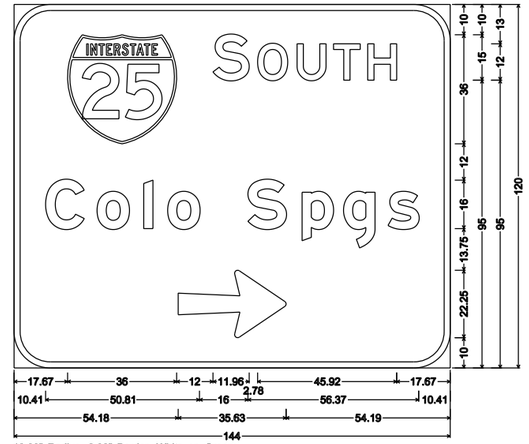

12.00" Radius, 2.00" Border, White on Green;
"SOUTH" E; "Colo Spgs" E Mod; Arrow AR-A3 - 35.63" 0";
Table of letter and object lefts.

S 17.67	S 65.67	O 80.41	U 93.44	T 105.48	H 116.76	
C 10.41	o 27.41	l 42.81	o 50.72	S 77.22	p 95.10	g 108.78	s 123.46
54.18						

Print Date: 9/27/2010
File Name: 16311TRAF_PH2_Sign_Layouts01.dgn
Horiz. Scale: 1:50 Vert. Scale: As Noted
Unit Information Unit Leader Initials

FELSBURG HOLT & ULLEVIG 6300 South Syracuse Way Centennial, CO 80111

Sheet Revisions		
Date:	Comments	Init.

Colorado Department of Transportation
2000 South Holly Street
Denver, CO 80222
Phone: 303-972-9112 FAX: 303-972-9114
Region 6 RLB

As Constructed
No Revisions:
Revised:
Void:

I-25/SANTA FE INTERCHANGE
GUIDE SIGN
LAYOUTS

Designer: LCL
Detailer: LCL
Sheet Subset: TRAFFIC
Structure Numbers:
Subset Sheets: SL-1 of 7

Project No./Code
IM 0254-394
16311
Sheet Number 304

Stan 1:46:29 PM K:\08276\16311\Phase 2\Traffic_ITS\Drawings\16311TRAF_PH2_Sign_Layouts01.dgn
9/27/2010 CDOT-PDFDraftQuality_XM.pltcfg CDOT-PenTable.tbl

SIGN #8A

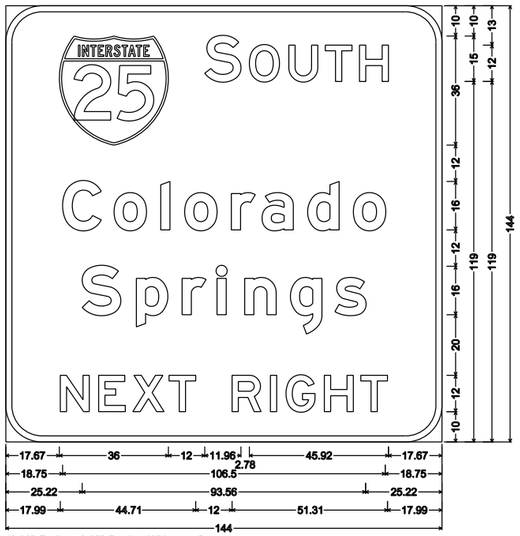

12.00" Radius, 2.00" Border, White on Green;
"SOUTH" E; "Colorado" E Mod; "Springs" E Mod; "NEXT RIGHT" E;
Table of letter and object lefts.

S 17.67	O 65.67	U 80.41	T 93.44	H 105.48	116.76	
o 18.75	l 35.74	o 51.15	r 59.05	a 74.46	d 84.61	99.65	e 114.75
S 25.22	p 43.10	r 58.21	i 69.73	n 78.86	g 93.97	s 108.65	
N 17.99	E 30.64	X 41.93	T 53.89	R 74.70	I 87.35	G 92.51	H 105.17	T 117.20

SIGN #8B

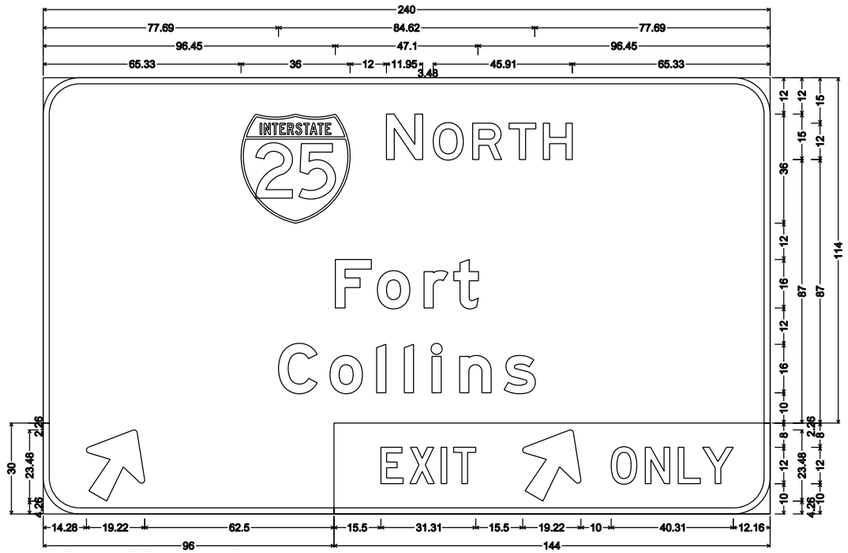

12.00" Radius, 2.00" Border, White on Green;
"NORTH" E; "Fort" E Mod; "Collins" E Mod;
12.00" Radius, 2.00" Border, White on Green;
Arrow AR-B3 - 25.00" 60";
12.00" Radius, 2.00" Border, White on Yellow;
"EXIT" Black D; Arrow AR-B3 - 25.00" 60" Black; "ONLY" Black D;
Table of letter and object lefts.

N 65.33	N 113.33	O 128.76	R 141.79	T 153.83	H 165.11		
F 96.45	o 110.34	r 125.74	t 135.55				
C 77.69	o 94.68	l 110.09	l 119.23	i 128.36	R 137.50	a 152.18	
14.28							
E 15.50	X 25.06	I 35.38	T 39.50	62.31	O 91.53	N 102.78	L 113.66	Y 121.72

SIGN #12

3.00" Radius, 1.00" Border, White on Green;
"EXIT 207B" E;
12.00" Radius, 2.00" Border, White on Green;
"Santa Fe Dr" E Mod; "TO" E; Arrow AR-A3 - 35.63" 60"; "Alameda Ave" E Mod;
12.00" Radius, 2.00" Border, White on Yellow;
"EXIT ONLY" Black E;
Table of letter and object lefts.

E 8.78	X 18.19	I 28.84	T 32.62	Z 51.97	O 67.01	7 82.53	B 99.26	
S 24.42	a 40.89	n 57.15	t 71.84	a 83.44	F 105.57	e 119.46	D 141.66	r 159.78
T 38.05	O 49.34	71.28	131.28					
A 15.42	l 35.67	a 43.57	m 59.84	e 81.62	d 95.54	a 110.65	A 132.78	v 151.31	e 166.38
E 48.63	X 59.91	I 72.70	T 77.23	O 96.05	N 109.08	L 121.73	Y 131.37	

Print Date: 9/27/2010		Sheet Revisions			Colorado Department of Transportation	As Constructed	I-25/SANTA FE INTERCHANGE GUIDE SIGN LAYOUTS	Project No./Code
File Name: 16311TRAF_PH2_Sign_Layouts02.dgn		Date:	Comments	Init.	2000 South Holly Street Denver, CO 80222 Phone: 303-972-9112 FAX: 303-972-9114	No Revisions:		IM 0254-394
Horiz. Scale: 1:50 Vert. Scale: As Noted					Region 6 RLB	Revised:	Designer: LCL / Structure Numbers	16311
Unit Information Unit Leader Initials						Void:	Detailer: LCL	Sheet Number 305
FELSBURG HOLT & ULLEVIG 6300 South Syracuse Way Centennial, CO 80111							Sheet Subset: TRAFFIC / Subset Sheets: SL-2 of 7	

Stan 1:46:35 PM K:\08276\16311\Phase 2\Traffic_ITS\Drawings\16311TRAF_PH2_Sign_Layouts02.dgn
9/27/2010 CDOT-PDFDraftQuality_XM.pltcfg CDOT-PenTable.tbl

SIGN #10A,B

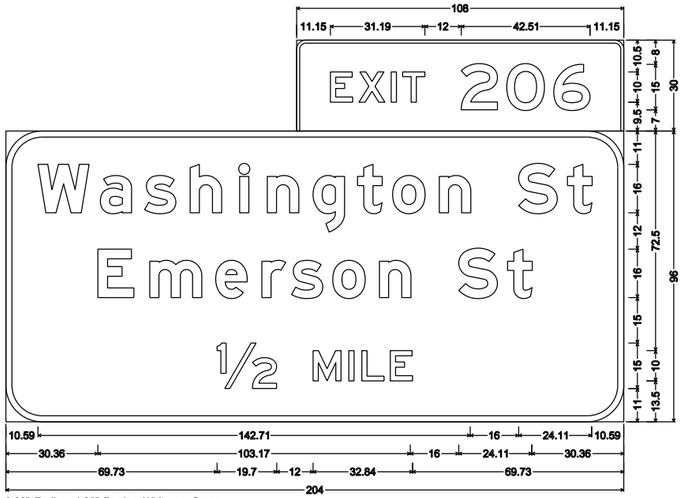

3.00" Radius, 1.00" Border, White on Green;
"EXIT 206" E;
12.00" Radius, 2.00" Border, White on Green;
"Washington St" E Mod; "Emerson St" E Mod; "½" E; "MILE" E;
Table of letter and object lefts.

E 11.15	X 20.56	I 31.21	T 34.99	2 54.34	O 69.38	6 84.89

W 10.59	a 31.19	s 45.80	h 60.84	I 77.17	n 86.31	g 101.41	t 116.10	o 127.70	n 143.10	S 169.30	t 185.41	
E 30.36	m 47.49	o 69.28	r 84.50	s 94.31	o 107.92	n 123.33	S 149.53	t 165.64				
½ 69.73	M 101.43	I 113.23	L 117.52	E 126.93								

SIGN #10C,D

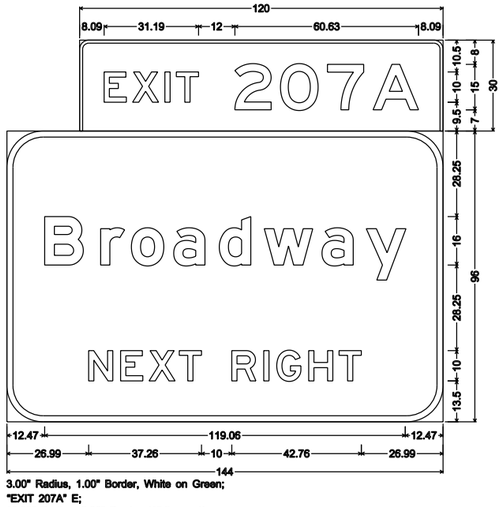

3.00" Radius, 1.00" Border, White on Green;
"EXIT 207A" E;
12.00" Radius, 2.00" Border, White on Green;
"Broadway" E Mod; "NEXT RIGHT" E;
Table of letter and object lefts.

E 8.09	X 17.50	I 28.15	T 31.93	2 51.28	O 66.32	7 81.83	A 96.91

B 12.47	r 30.95	o 41.10	a 55.08	d 70.12	w 84.98	a 104.04	y 118.65		
N 26.99	E 37.53	X 46.94	T 56.91	R 74.25	I 84.80	G 89.09	H 99.64	T 109.67	

SIGN #31

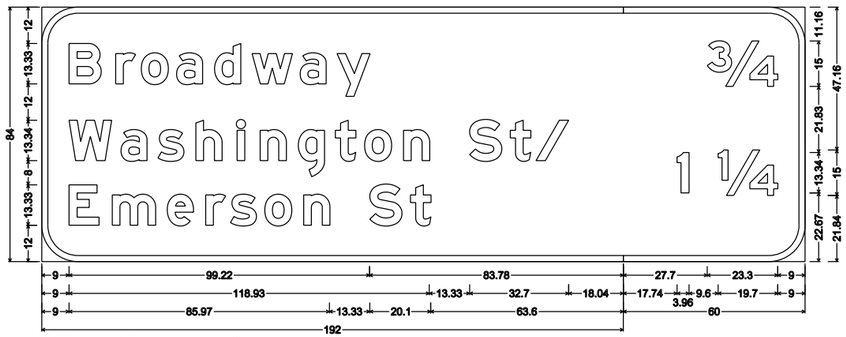

12.00" Radius, 2.00" Border, White on Green;
"Broadway" E Mod; "Washington St/" E Mod; "Emerson St" E Mod;
12.00" Radius, 2.00" Border, White on Green;
"¾" E Mod; "1" E Mod; "¼" E Mod;
Table of letter and object lefts.

B 9.00	r 24.40	o 32.86	a 44.51	d 57.04	w 69.43	a 85.31	y 97.49							
W 9.00	a 26.17	s 38.35	h 50.87	I 64.49	n 72.10	g 84.69	t 96.92	o 106.59	n 119.43	S 141.26	t 154.69	/ 163.19	¾ 27.70	+192
E 9.00	m 23.27	o 41.43	r 54.12	s 62.29	o 73.63	n 86.47	S 108.30	t 121.73	1 17.74	¼ 31.30	+192	+192		

SIGN #34

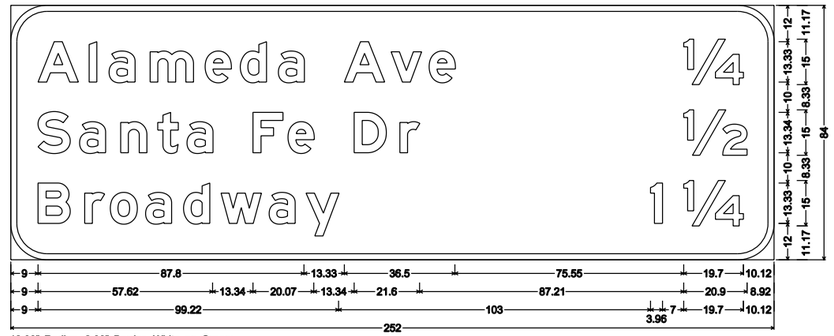

12.00" Radius, 2.00" Border, White on Green;
"Alameda Ave" E Mod; "Santa Fe Dr" E Mod; "Broadway" E Mod; "1" E Mod; "¼" E Mod; "½" E Mod; "¼" E Mod;
Table of letter and object lefts.

A 9.00	l 25.87	a 32.46	m 46.01	e 64.17	d 75.77	a 88.35	A 110.13	y 125.57	e 138.13	¼ 222.18
S 9.00	a 22.72	n 36.28	t 48.52	a 58.18	F 79.96	e 91.53	D 113.37	r 128.47	½ 222.18	
B 9.00	r 24.40	o 32.86	a 44.51	d 57.04	w 69.43	a 85.31	y 97.49	l 211.22	¼ 222.18	

Print Date: 9/27/2010	Sheet Revisions		
File Name: 16311TRAF_PH2_Sign_Layouts03.dgn	Date:	Comments	Init.
Horiz. Scale: 1:50 Vert. Scale: As Noted			
Unit Information Unit Leader Initials			
FELSBURG HOLT & ULLEVIG 6300 South Syracuse Way Centennial, CO 80111			

Colorado Department of Transportation
2000 South Holly Street
Denver, CO 80222
Phone: 303-972-9112 FAX: 303-972-9114
Region 6 RLB

As Constructed
No Revisions:
Revised:
Void:

I-25/SANTA FE INTERCHANGE
GUIDE SIGN
LAYOUTS

Designer: LCL
Detailer: LCL
Sheet Subset: TRAFFIC
Structure Numbers:
Subset Sheets: SL-3 of 7

Project No./Code
IM 0254-394
16311
Sheet Number 306

Stan 1:46:41 PM K:\08276\16311\Phase 2\Traffic_ITS\Drawings\16311TRAF_PH2_Sign_Layouts03.dgn
9/27/2010 CDOT-PDFDraftQuality_XM.pltcfg CDOT-PenTable.tbl

SIGN #19A,B

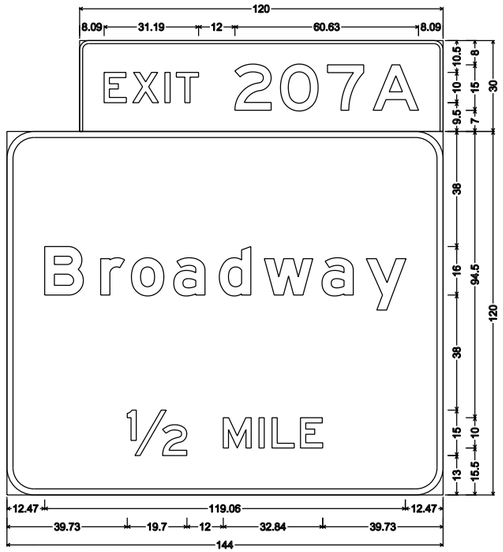

3.00" Radius, 1.00" Border, White on Green;
"EXIT 207A" E;
9.00" Radius, 2.00" Border, White on Green;
"Broadway" E Mod; "½" E; "MILE" E;
Table of letter and object lefts.

E 8.09	X 17.50	I 28.15	T 31.93	2 51.28	O 66.32	7 81.83	A 96.91
B 12.47	r 30.95	e 41.10	a 55.06	d 70.12	w 84.98	a 104.04	y 118.65
½ 39.73	M 71.43	I 83.23	L 87.52	E 96.93			

SIGN #19C,D

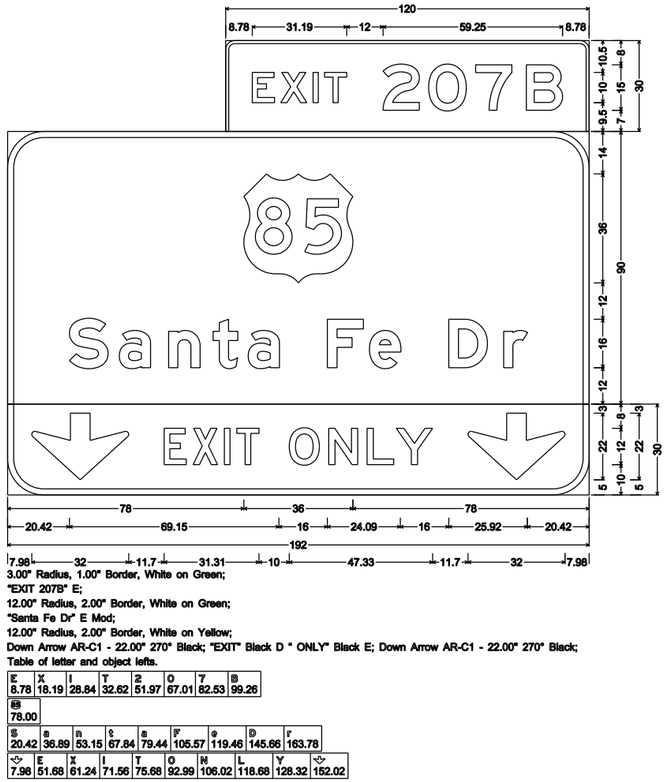

3.00" Radius, 1.00" Border, White on Green;
"EXIT 207B" E;
12.00" Radius, 2.00" Border, White on Green;
"Santa Fe Dr" E Mod;
12.00" Radius, 2.00" Border, White on Yellow;
Down Arrow AR-C1 - 22.00" 270° Black; "EXIT" Black D " ONLY" Black E; Down Arrow AR-C1 - 22.00" 270° Black;
Table of letter and object lefts.

E 8.78	X 18.19	I 28.84	T 32.62	2 51.97	O 67.01	7 82.53	B 99.26
B 78.00							
S 20.42	a 36.89	n 53.15	t 67.84	a 79.44	F 105.57	9 119.46	D 145.66	r 163.78
7.98	E 51.68	X 61.24	I 71.56	T 75.68	O 92.99	N 106.02	L 118.68	Y 128.32	152.02

SIGN #20
SIGN #21

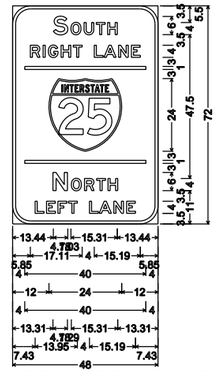

6.00" Radius, 1.00" Border, White on Green;
"SOUTH" E;
"RIGHT LANE" E;
"NORTH" E;
"LEFT LANE" E;
Table of letter and object lefts.

S 13.44	O 19.25	U 23.60	T 27.61	H 31.37	
R 5.85	I 10.07	G 11.79	H 16.01	T 20.02	
L 26.96	A 30.17	N 34.99	E 39.21		
4.00					
12.00					
4.00					
N 13.31	O 19.38	R 23.73	T 27.74	H 31.50	
L 7.43	E 11.19	F 14.95	T 18.44		
L 25.38	A 28.59	N 33.41	E 37.63		

SIGN #24

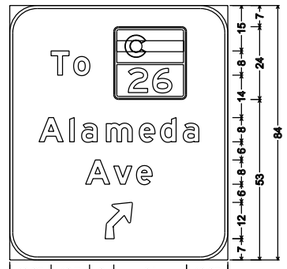

9.00" Radius, 1.00" Border, White on Green;
"To" E Mod; "Alameda" E Mod;
"Ave" E Mod;
45 Deg Advanced Turn Arrow 9.00" X 12.00";
Table of letter and object lefts.

T 13.65	o 21.10	26 34.35					
A 9.66	l 19.78	a 23.74	m 31.87	o 42.76	d 49.72	a 57.27	
A 25.05	v 34.32	e 41.85					
31.50							

Stan 1:46:48 PM K:\08276\16311\Phase 2\Traffic_ITS\Drawings\16311TRAF_PH2_Sign_Layouts04.dgn
9/27/2010 CDOT-PDFDraftQuality_XM.pltcfg CDOT-PenTable.tbl

Print Date: 9/27/2010
File Name: 16311TRAF_PH2_Sign_Layouts04.dgn
Horiz. Scale: 1:50 Vert. Scale: As Noted
Unit Information Unit Leader Initials

FELSBURG HOLT & ULLEVIG 6300 South Syracuse Way Centennial, CO 80111

Sheet Revisions

Date:	Comments	Init.

Colorado Department of Transportation
2000 South Holly Street
Denver, CO 80222
Phone: 303-972-9112 FAX: 303-972-9114
Region 6 RLB

As Constructed
No Revisions:
Revised:
Void:

I-25/SANTA FE INTERCHANGE
GUIDE SIGN
LAYOUTS

Designer: LCL
Detailer: LCL
Sheet Subset: TRAFFIC
Structure Numbers:
Subset Sheets: SL-4 of 7

Project No./Code
IM 0254-394
16311
Sheet Number 307

SIGN #27

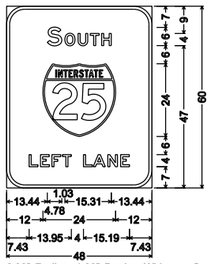

6.00" Radius, 1.00" Border, White on Green;
"SOUTH" E;
"LEFT LANE" E;
Table of letter and object lefts.

S 13.44	O 19.25	U 23.60	T 27.61	H 31.37
12.00				
L 7.43	E 11.19	F 14.95	T 18.44	
L 25.38	A 28.59	N 33.41	E 37.63	

SIGN #29

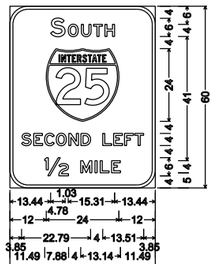

6.00" Radius, 1.00" Border, White on Green;
"SOUTH" E;
"SECOND LEFT" E 80% spacing;
"½ MILE" E;
Table of letter and object lefts.

S 13.44	O 19.25	U 23.60	T 27.61	H 31.37
12.00				
S 3.85	E 7.86	C 11.46	O 15.31	N 19.44	D 23.46
L 30.64	E 34.24	F 37.84	T 41.21	
½ 11.49				
W 23.37	I 28.09	L 29.81	E 33.57	

SIGN #32A,B

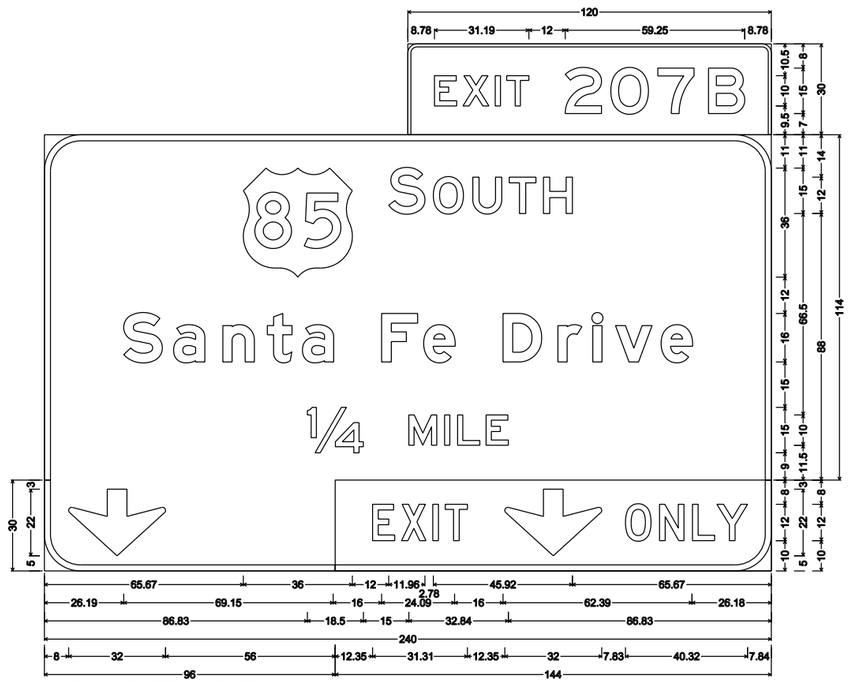

3.00" Radius, 1.00" Border, White on Green;
"EXIT 207B" E;
12.00" Radius, 2.00" Border, White on Green;
"SOUTH" E; "Santa Fe Drive" E Mod; "¼ MILE" E;
12.00" Radius, 2.00" Border, White on Green;
Down Arrow AR-C1 - 22.00° 270°;
12.00" Radius, 2.00" Border, White on Yellow;
"EXIT" Black D; Down Arrow AR-C1 - 22.00° 270° Black; "ONLY" Black D;
Table of letter and object lefts.

E 8.78	X 18.19	I 28.84	T 32.62	2 51.97	O 67.01	7 82.53	B 99.26	
¼ 65.67	S 113.67	O 128.41	U 141.44	T 153.48	H 164.76			
S 26.19	a 42.66	n 58.92	t 73.61	a 85.21	F 111.34	e 125.23	D 151.43	r 169.55	I 181.07	v 188.55	e 203.61
¼ 86.83	W 120.33	I 132.13	L 136.42	E 145.83							
8.00											
E 12.35	X 21.91	I 32.22	T 36.35	56.01	O 95.84	N 107.09	L 117.97	Y 126.03			

SIGN #32C,D

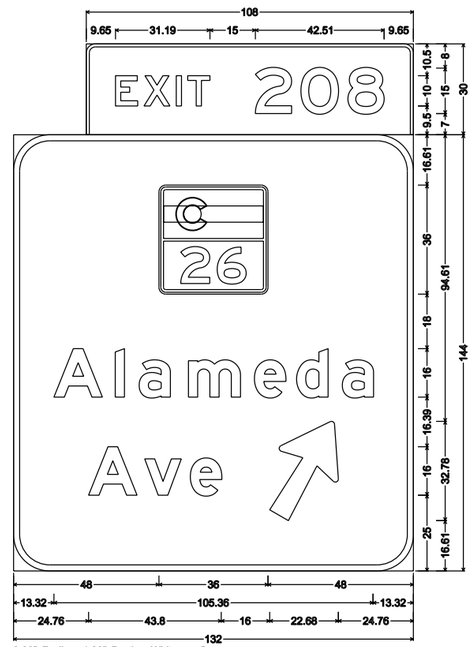

3.00" Radius, 1.00" Border, White on Green;
"EXIT 208" E;
12.00" Radius, 2.00" Border, White on Green;
"Alameda" E Mod; "Ave" E Mod; Arrow AR-A3 - 35.63° 60°;
Table of letter and object lefts.

E 9.65	X 19.06	I 29.71	T 33.49	2 55.84	O 70.88	8 86.39
48.00						
A 13.32	l 33.57	a 41.47	m 57.74	e 79.52	d 93.44	e 108.55
A 24.76	v 43.30	e 58.36	84.56			

Stan 1:46:54 PM K:\08276\16311\Phase 2\Traffic_ITS\Drawings\16311TRAF_PH2_Sign_Layouts05.dgn
9/27/2010 CDOT-PDFDraftQuality_XM.pltcfg CDOT-PenTable.tbl

Print Date: 9/27/2010	Sheet Revisions			Colorado Department of Transportation	As Constructed
File Name: 16311TRAF_PH2_Sign_Layouts05.dgn	Date:	Comments	Init.	2000 South Holly Street	No Revisions:
Horiz. Scale: 1:50 Vert. Scale: As Noted				Denver, CO 80222	Revised:
Unit Information Unit Leader Initials				Phone: 303-972-9112 FAX: 303-972-9114	Void:
FELSBURG HOLT & ULLEVIG 6300 South Syracuse Way Centennial, CO 80111				Region 6 RLB	

I-25/SANTA FE INTERCHANGE GUIDE SIGN LAYOUTS			Project No./Code
Designer: LCL	Structure Numbers		IM 0254-394
Detailer: LCL			16311
Sheet Subset: TRAFFIC	Subset Sheets: SL-5 of 7		Sheet Number 308

SIGN #36A,B

3.00" Radius, 1.00" Border, White on Green;
"EXIT 207B" E;
12.00" Radius, 2.00" Border, White on Green;
"SOUTH" E; "Santa Fe" E Mod; "Drive" E Mod; "¾ MILE" E;
Table of letter and object lefts.

E 13.28	X 22.69	I 33.34	T 37.12	2 59.47	O 74.51	7 90.03	B 106.76
85 11.67	S 59.67	O 74.41	U 87.44	T 99.48	H 110.76		
S 11.38	a 27.85	n 44.11	t 58.80	a 70.40	F 96.53	e 110.42	
D 34.81	r 52.92	I 64.44	v 71.93	e 87.00			
¾ 30.85	M 68.31	I 80.10	L 84.40	E 93.80			

SIGN #36C,D

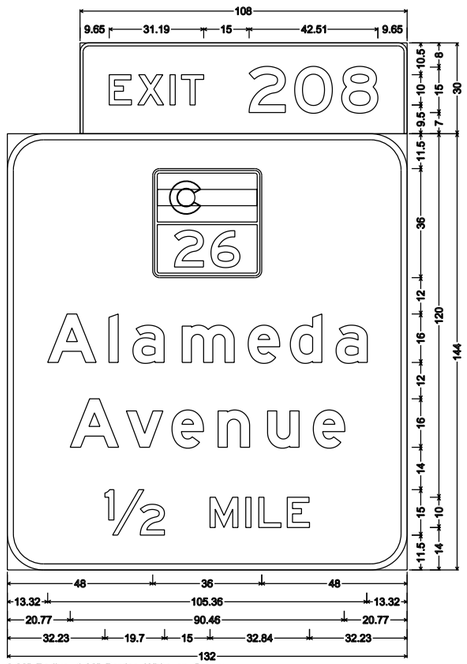

3.00" Radius, 1.00" Border, White on Green;
"EXIT 208" E;
12.00" Radius, 2.00" Border, White on Green;
"Alameda" E Mod; "Avenue" E Mod; "½ MILE" E;
Table of letter and object lefts.

E 9.65	X 19.06	I 29.71	T 33.49	2 55.84	O 70.88	6 86.39	
26 48.00							
A 13.32	l 33.57	a 41.47	m 57.74	e 79.52	d 93.44	a 108.55	
A 20.77	v 39.30	e 54.37	n 69.59	u 85.93	e 101.03		
½ 32.23	M 66.93	I 78.73	L 83.02	E 92.43			

SIGN #39

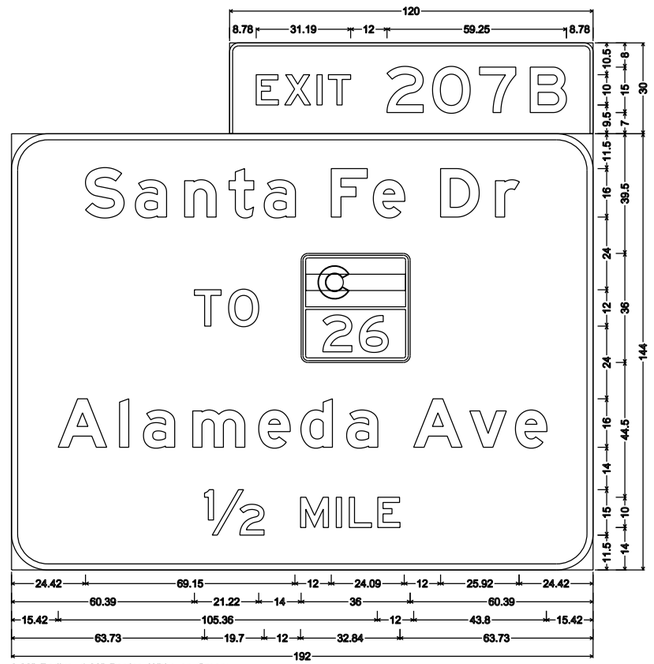

3.00" Radius, 1.00" Border, White on Green;
"EXIT 207B" E;
12.00" Radius, 2.00" Border, White on Green;
"Santa Fe Dr" E Mod; "TO" E; "Alameda Ave" E Mod; "½ MILE" E;
Table of letter and object lefts.

E 8.78	X 18.19	I 28.84	T 32.62	2 51.97	O 67.01	7 82.53	B 99.26	
S 24.42	a 40.89	n 57.15	t 71.84	a 83.44	F 105.57	e 119.46	D 141.66	r 159.78
T 60.39	O 71.67	6 95.61						
A 15.42	l 35.67	a 43.57	m 59.84	e 81.62	d 95.54	a 110.65	A 132.78	v 151.31	e 166.38
½ 63.73	M 95.43	I 107.23	L 111.52	E 120.93				

Print Date: 9/27/2010		Sheet Revisions		
File Name: 16311TRAF_PH2_Sign_Layouts06.dgn		Date:	Comments	Init.
Horiz. Scale: 1:50 Vert. Scale: As Noted				
Unit Information Unit Leader Initials				
FELSBURG HOLT & ULLEVIG 6300 South Syracuse Way Centennial, CO 80111				

Colorado Department of Transportation
2000 South Holly Street
Denver, CO 80222
Phone: 303-972-9112 FAX: 303-972-9114
Region 6 RLB

As Constructed
No Revisions:
Revised:
Void:

I-25/SANTA FE INTERCHANGE
GUIDE SIGN
LAYOUTS

Designer: LCL
Detailer: LCL
Sheet Subset: TRAFFIC
Structure Numbers:
Subset Sheets: SL-6 of 7

Project No./Code
IM 0254-394
16311
Sheet Number 309

Stan 1:47:00 PM K:\08276\16311\Phase 2\Traffic_ITS\Drawings\16311TRAF_PH2_Sign_Layouts06.dgn
9/27/2010 CDOT-PDFDraftQuality_XM.pltcfg CDOT-PenTable.tbl

SIGN #41

3.00" Radius, 1.00" Border, White on Green;
"EXIT 207B" E;
12.00" Radius, 2.00" Border, White on Green;
"Santa Fe Dr" E Mod; "TO" E; "Alameda Ave" E Mod;
12.00" Radius, 2.00" Border, White on Yellow;
"EXIT" Black D; Down Arrow AR-C1 - 22.00" 270° Black; "ONLY" Black D;
Table of letter and object lefts.

E 8.78	X 18.19	I 28.84	T 32.62	2 51.97	O 67.01	7 82.53	B 99.26
S 24.42	a 40.89	n 57.15	t 71.84	a 83.44	F 105.57	e 119.46	D 141.66	r 159.78
T 60.39	O 71.67	26 95.61					
A 15.42	l 35.67	a 43.57	m 59.84	e 81.62	d 95.54	a 110.65	A 132.78	v 151.31	e 166.38
E 25.35	X 34.91	I 45.22	T 49.35	⇩ 80.01	O 130.85	N 142.10	L 152.98	Y 161.04

Stan 1:47:06 PM K:\08276\16311\Phase 2\Traffic_ITS\Drawings\16311TRAF_PH2_Sign_Layouts07.dgn
9/27/2010 CDOT-PDFDraftQuality_XM.pltcfg CDOT-PenTable.tbl

Print Date: 9/27/2010
File Name: 16311TRAF_PH2_Sign_Layouts07.dgn
Horiz. Scale: 1:50 Vert. Scale: As Noted
Unit Information Unit Leader Initials

FELSBURG HOLT & ULLEVIG 6300 South Syracuse Way Centennial, CO 80111

Sheet Revisions		
Date:	Comments	Init.

Colorado Department of Transportation
2000 South Holly Street
Denver, CO 80222
Phone: 303-972-9112 FAX: 303-972-9114
Region 6 RLB

As Constructed
No Revisions:
Revised:
Void:

I-25/SANTA FE INTERCHANGE
GUIDE SIGN
LAYOUTS

Designer: LCL
Detailer: LCL
Sheet Subset: TRAFFIC
Structure Numbers:
Subset Sheets: SL-7 of 7

Project No./Code
IM 0254-394
16311
Sheet Number 310

Know what's below. Call before you dig.

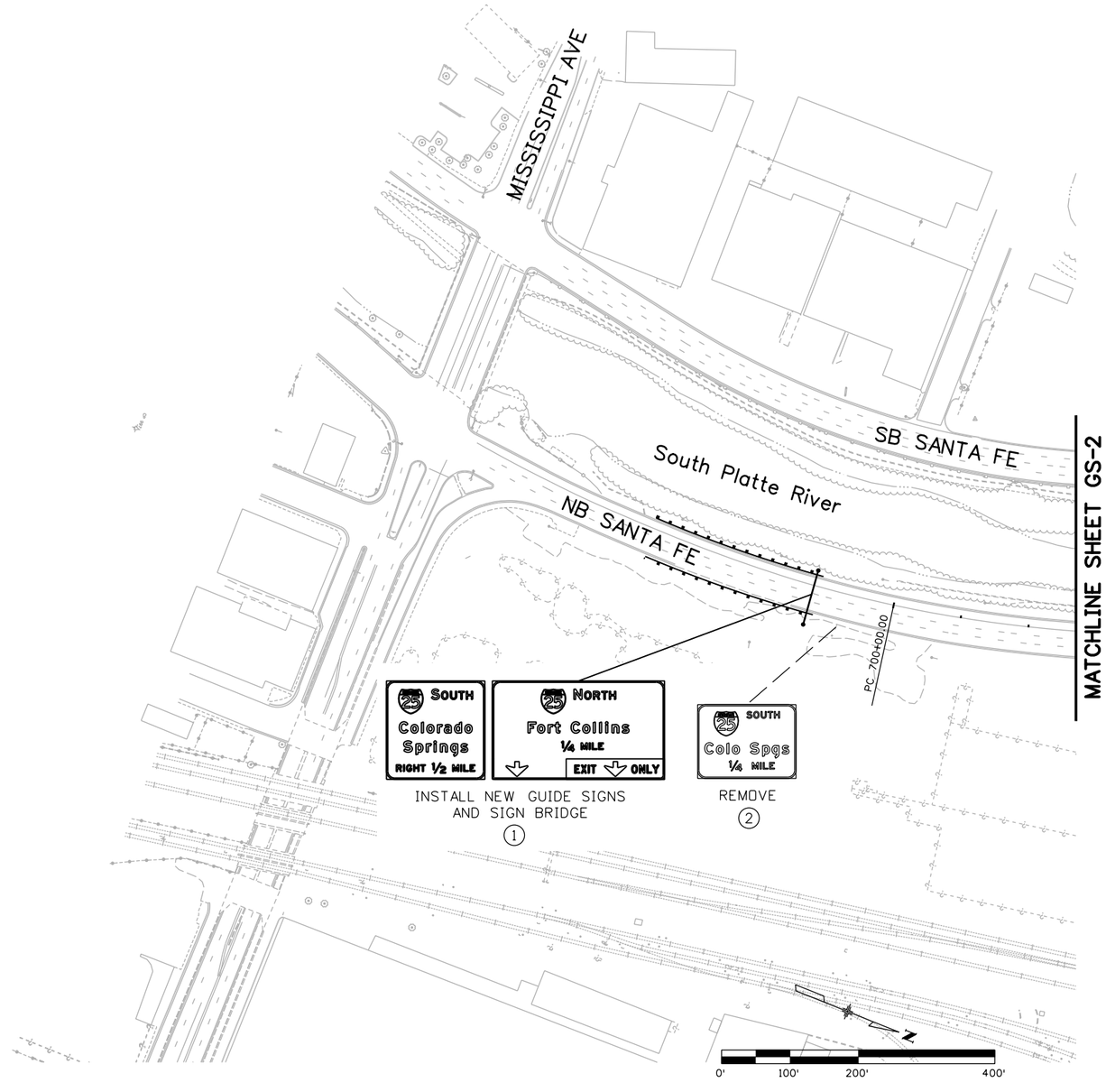

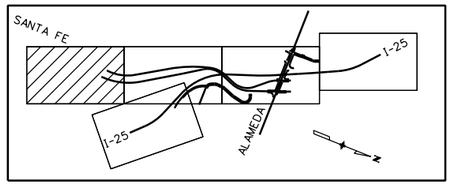

MAPKEY

Print Date: 9/27/2010	Sheet Revisions	Colorado Department of Transportation	As Constructed
File Name: 16311TRAF_PH2_GuideSignPlan1.dgn	Date: / Comments / Init.	2000 South Holly Street, Denver, CO 80222	No Revisions:
Horiz. Scale: 1:200 Vert. Scale: As Noted		Phone: 303-972-9112 FAX: 303-972-9114	Revised:
Unit Information Unit Leader Initials		Region 6 RLB	Void:
FELSBURG HOLT & ULLEVIG 6300 South Syracuse Way, Centennial, CO 80111			

I-25/SANTA FE INTERCHANGE GUIDE SIGN PLAN			Project No./Code
Designer: LCL	Structure Numbers		IM 0254-394
Detailer: SYS			16311
Sheet Subset: TRAFFIC	Subset Sheets: GS-1 of 5		Sheet Number 311

Stan 1:47:13 PM K:\08276\16311\Phase 2\Traffic_ITS\Drawings\16311TRAF_PH2_GuideSignPlan1.dgn
9/27/2010 CDOT-PDFDraftQuality_XM.pltcfg CDOT-PenTable.tbl

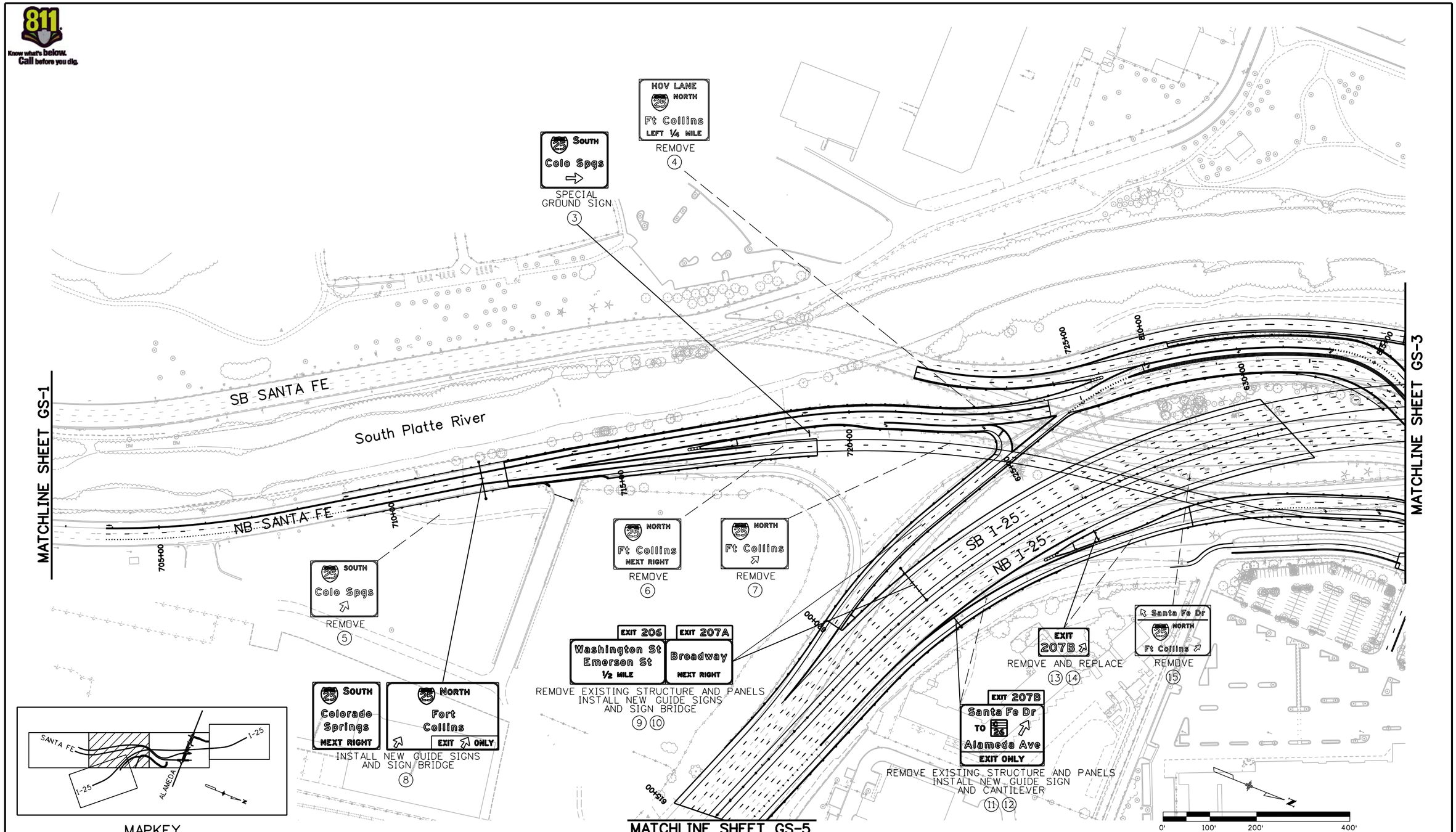

Print Date: 9/28/2010		Sheet Revisions		Colorado Department of Transportation	As Constructed	I-25/SANTA FE INTERCHANGE GUIDE SIGN PLAN	Project No./Code
File Name: 16311TRAF_PH2_GuideSignPlan2.dgn		Date:	Comments	Init.	No Revisions:		IM 0254-394
Horiz. Scale: 1:200	Vert. Scale: As Noted				Revised:	Designer: LCL / Structure Numbers	16311
Unit Information	Unit Leader Initials				Void:	Detailer: SYS	
FELSBURG HOLT & ULLEVIG 6300 South Syracuse Way Centennial, CO 80111						Sheet Subset: TRAFFIC / Subset Sheets: GS-2 of 5	Sheet Number 312

DOT DEPARTMENT OF TRANSPORTATION
2000 South Holly Street
Denver, CO 80222
Phone: 303-972-9112 FAX: 303-972-9114
Region 6 RLB

Stan 5:59:42 AM K:\08276\16311\Phase 2\Traffic_ITS\Drawings\16311TRAF_PH2_GuideSignPlan2.dgn
9/28/2010 CDOT-PDFDraftQuality_XM.pltcfg CDOT-PenTable.tbl

Know what's below. Call before you dig.

S. PLATTE RIVER DRIVE

EXIT 207A
Broadway
½ MILE

EXIT 207B
85
Santa Fe Dr
EXIT ONLY

INSTALL NEW GUIDE SIGNS AND SIGN BRIDGE STRUCTURE
19

JCT 25 RIGHT LANE
REMOVE
22

SOUTH RIGHT LANE 25 NORTH LEFT LANE
SPECIAL
20 21

S. LIPAN ST

EXISTING VMS (TO REMAIN)

EXIT 207B
85 SOUTH
Santa Fe Dr
EXIT ONLY
REMOVE
17

EXIT 207B
E5-1a
18

EXIT 207B
REMOVE
16

EXITS 209A-B
6 WEST
6th Avenue
1 MILE
EXISTING (TO REMAIN)

ALAMEDA AVE
WEST
26
EXISTING (TO REMAIN)

EXIT 208
EXISTING (TO REMAIN)

S. Platte River

MATCHLINE SHEET GS-2

835+00
840+00
845+00
650+00
855+00
820+00
825+00
830+00
745+00

SB I-25
NB I-25

KALAMATH ST

SOUTH 25 LEFT LANE
SPECIAL
27

SB SANTA FE

SOUTH 25 SECOND LEFT ½ MILE
SPECIAL
29

ALAMEDA AVE

Santa Fe Dr 1/4
Broadway 3/4
Washington St 1 1/4
30
REPLACE EXISTING PANEL WITH
Broadway 3/4
Washington St/ Emerson St 1 1/4
31

NB SANTA FE

85 SOUTH
Santa Fe Dr
25 SOUTH
Colo Spgs
REMOVE
23

SOUTH 25
Colo Spgs
REMOVE
26

SOUTH 25
Colo Spgs
¼ MILE
NORTH 25
Ft Collins
EXIT ONLY
REMOVE STRUCTURE AND PANELS
28

To 25 Alameda Ave
SPECIAL
24

ALAMEDA AVENUE
85 SOUTH
SANTA FE DR
REMOVE
25

SOUTH LEFT LANE 25 NORTH
EXISTING (TO REMAIN)

MATCHLINE SHEET GS-4

N

0' 100' 200' 400'

Print Date: 9/27/2010	Sheet Revisions	Colorado Department of Transportation	As Constructed
File Name: 16311TRAF_PH2_GuideSignPlan3.dgn	Date: / Comments / Init.	2000 South Holly Street, Denver, CO 80222	No Revisions:
Horiz. Scale: 1:200 Vert. Scale: As Noted		Phone: 303-972-9112 FAX: 303-972-9114	Revised:
Unit Information Unit Leader Initials		Region 6 RLB	Void:
FELSBURG HOLT & ULLEVIG 6300 South Syracuse Way, Centennial, CO 80111			

I-25/SANTA FE INTERCHANGE GUIDE SIGN PLAN			Project No./Code
Designer: LCL	Structure Numbers		IM 0254-394
Detailer: SYS			16311
Sheet Subset: TRAFFIC	Subset Sheets: GS-3 of 5		Sheet Number 313

Stan 1:47:27 PM K:\08276\16311\Phase 2\Traffic_ITS\Drawings\16311TRAF_PH2_GuideSignPlan3.dgn
9/27/2010 CDOT-PDFDraftQuality_XM.pltcfg CDOT-PenTable.tbl

Know what's below. Call before you dig.

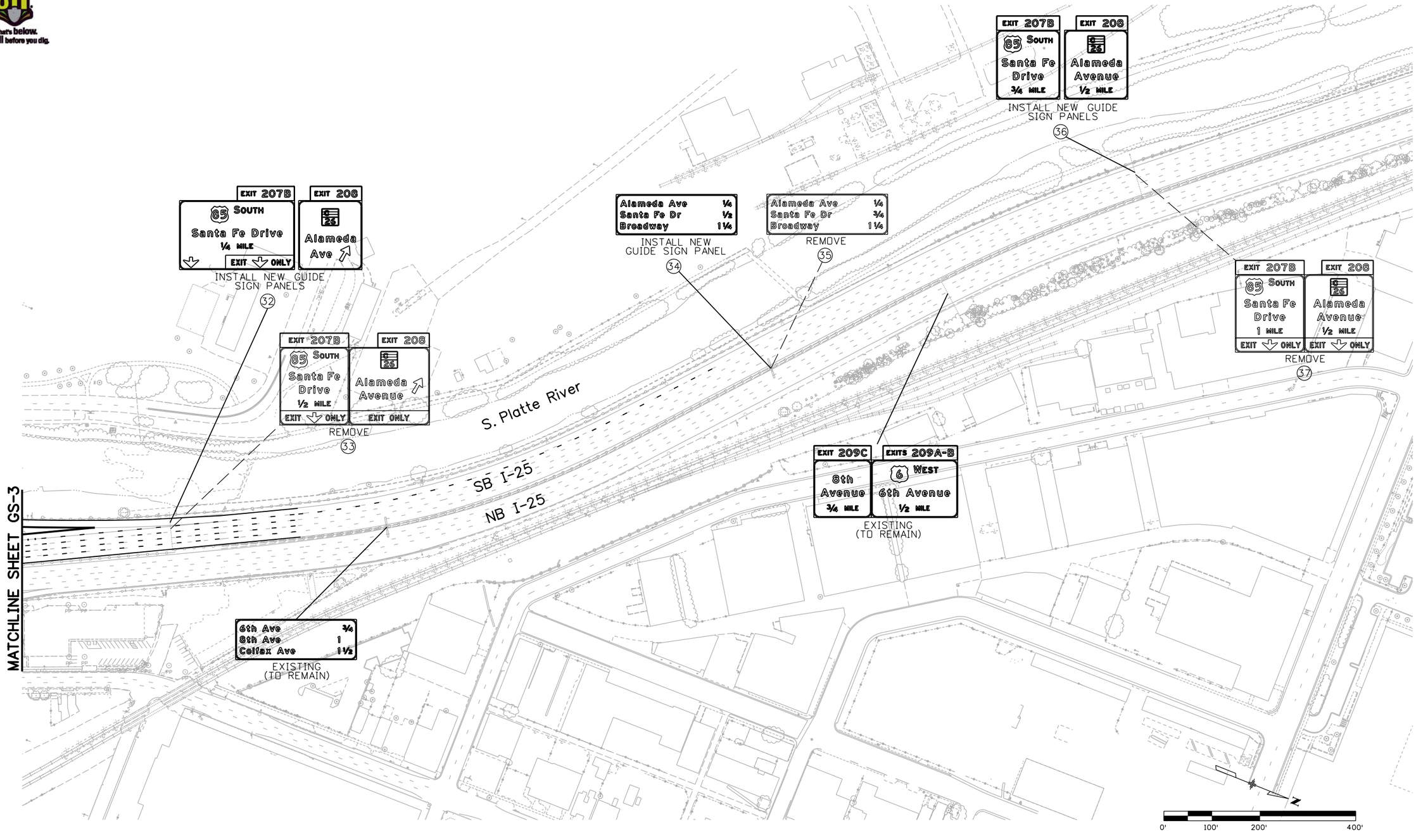

Print Date: 9/28/2010	Sheet Revisions	Colorado Department of Transportation	As Constructed
File Name: 16311TRAF_PH2_GuideSignPlan4.dgn	Date: / Comments / Init.	2000 South Holly Street, Denver, CO 80222	No Revisions:
Horiz. Scale: 1:200 Vert. Scale: As Noted		Phone: 303-972-9112 FAX: 303-972-9114	Revised:
Unit Information Unit Leader Initials		Region 6 RLB	Void:
FELSBURG HOLT & ULLEVIG 6300 South Syracuse Way Centennial, CO 80111			

I-25/SANTA FE INTERCHANGE GUIDE SIGN PLAN			Project No./Code
Designer: LCL	Structure Numbers		IM 0254-394
Detailer: SYS			16311
Sheet Subset: TRAFFIC	Subset Sheets: GS-4 of 5		Sheet Number 314

Stan 6:00:21 AM K:\08276\16311\Phase 2\Traffic_ITS\Drawings\16311TRAF_PH2_GuideSignPlan4.dgn
9/28/2010 CDOT-PDFDraftQuality_XM.pltcfg CDOT-PenTable.tbl

Know what's below. Call before you dig.

RTD Light Rail Station

SB I-25

NB I-25

EXIT 207A
Broadway ⇗
EXISTING
(TO REMAIN)

MATCHLINE SHEET GS-2

612400

EXIT 207B
Santa Fe Dr
TO 85 26
Alameda Ave
EXIT ⇩ ONLY

REMOVE EXISTING SIGN AND O.H. LIGHTS
REPLACE WITH NEW GUIDE SIGN PANEL
(40) (41)

EXIT 207B
Santa Fe Dr
TO 85 26
Alameda Ave
3/4 MILE
EXIT ONLY

REMOVE
(38)

EXIT 207B
Santa Fe Dr
TO 85 26
Alameda Ave
1/2 MILE

INSTALL NEW
GUIDE SIGN
(39)

OHIO AVE

BROADWAY

0' 100' 200' 400'

Stan 6:11:56 AM K:\08276\16311\Phase 2\Traffic_ITS\Drawings\16311TRAF_PH2_GuideSignPlan5.dgn
9/28/2010 CDOT-PDFDraftQuality_XM.pltcfg CDOT-PenTable.tbl

Print Date: 9/28/2010	Sheet Revisions			Colorado Department of Transportation	As Constructed
File Name: 16311TRAF_PH2_GuideSignPlan5.dgn	Date:	Comments	Init.	2000 South Holly Street	No Revisions:
Horiz. Scale: 1:200 Vert. Scale: As Noted				Denver, CO 80222	Revised:
Unit Information Unit Leader Initials				Phone: 303-972-9112 FAX: 303-972-9114	Void:
FELSBURG HOLT & ULLEVIG 6300 South Syracuse Way Centennial, CO 80111				Region 6 RLB	

I-25/SANTA FE INTERCHANGE GUIDE SIGN PLAN			Project No./Code
Designer: LCL	Structure Numbers		IM 0254-394
Detailer: SYS			16311
Sheet Subset: TRAFFIC	Subset Sheets: GS-5 of 5		Sheet Number 315

Know what's below. Call before you dig.

DELINEATORS	
TYPE I	QTY=
TYPE I (BARRIER)	QTY=
TYPE II	QTY=
TYPE II (BARRIER)	QTY=

RTD Light Rail Station
(Broadway Park-n-Ride)

RTD LIGHT RAIL TRACKS

CONSOLIDATED RAILROAD

EXIT 207A
Broadway ⇗

EXISTING
(TO REMAIN)

N

0' 50' 100' 200'

OFF RAMP TO BROADWAY

SB I-25

NB I-25

615+00

CHANNELIZING GORE LINE
WHITE, 11" WIDE

EDGE LINE
WHITE, 4" WIDE

EDGE LINE
YELLOW, 4" WIDE

MATCHLINE I-25 STA. 619+00

REMOVE EXISTING
EDGE LINE

LANE DROP LINE
WHITE, 11" WIDE

EDGE LINE
YELLOW, 4" WIDE

EDGE LINE
WHITE, 4" WIDE

LANE LINE
WHITE, 7" WIDE
(TYPICAL)

50

REMOVE AND
REPLACE WITH

RIGHT LANE
MUST
EXIT

51

48R3-7AR

EXIT 207B
Santa Fe Dr
TO
C 26
Alameda Ave
EXIT ONLY

REMOVE EXISTING SIGN AND O.H. LIGHTS
REPLACE WITH NEW GUIDE SIGN PANEL
40 41

EXIT
25
M.P.H.

48W13-2
52

RIGHT LANE
MUST
EXIT

REMOVE
(INCLUDING 750 FT
SUPPLEMENTAL PANEL)
53

RIGHT LANE
MUST
EXIT

48R3-7AR
(WALL MOUNTED)
54

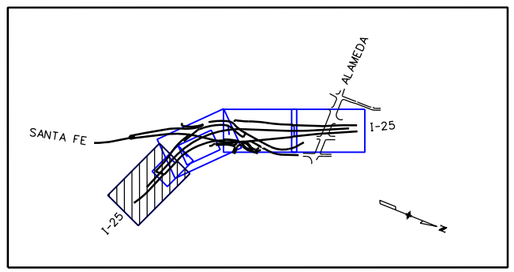

MAPKEY

Print Date: 9/27/2010			
File Name: 16311TRAF_PH2_I-25StripingPlan1.dgn			
Horiz. Scale: 1:100	Vert. Scale: As Noted		
Unit Information	Unit Leader Initials		

FELSBURG HOLT & ULLEVIG 6300 South Syracuse Way Centennial, CO 80111

Sheet Revisions		
Date:	Comments	Init.

Colorado Department of Transportation
DEPARTMENT OF TRANSPORTATION
2000 South Holly Street
Denver, CO 80222
Phone: 303-972-9112 FAX: 303-972-9114
Region 6 RLB

As Constructed
No Revisions:
Revised:
Void:

I-25/SANTA FE INTERCHANGE
I-25
SIGNING AND STRIPING PLAN

Designer:	SPG/LCL	Structure Numbers	
Detailer:	SYS		
Sheet Subset:	TRAFFIC	Subset Sheets:	SS-1 of 11

Project No./Code
IM 0254-394
16311
Sheet Number 316

Stan 1:48:02 PM K:\08276\16311\Phase 2\Traffic_ITS\Drawings\16311TRAF_PH2_I-25StripingPlan1.dgn
9/27/2010 CDOT-PDFDraftQuality_XM.pltcfg CDOT-PenTable.tbl

Know what's below. Call before you dig.

DELINEATORS	
TYPE I	QTY=
TYPE I (BARRIER)	QTY=
TYPE II	QTY=
TYPE II (BARRIER)	QTY=

EXIT 206 | EXIT 207A
Washington St
Emerson St
½ MILE
Broadway
NEXT RIGHT

REMOVE EXISTING SIGN AND STRUCTURE
INSTALL NEW GUIDE SIGNS
AND BRIDGE STRUCTURE
(9) (10)

NEXT EXIT
VMS
RESET
(57)

REMOVE
(56)

48W4-1R
(55)

REMOVE
(58)

REMOVE
(59)

MATCHLINE
STA 307+00
(SHEET SS-8)

EDGE LINE
WHITE, 4" WIDE

EDGE LINE
YELLOW, 4" WIDE

LANE LINE
WHITE, 7" WIDE
(TYPICAL)

EDGE LINE
YELLOW, 4" WIDE

EDGE LINE
WHITE, 4" WIDE

CHANNELIZING
GORE LINE
WHITE, 11" WIDE

205+00

210+00

220+00

630+00

RAMP 3

SB I-25

NB I-25

RAMP 2

SB I-25
(Existing)

NB I-25
(Existing)

MATCHLINE I-25 STA. 619+00

MATCHLINE I-25 STA. 632+00

MATCHLINE
STA. 207+00
(SHEET SS-10)

EDGE LINE
WHITE, 4" WIDE

CHANNELIZING
GORE LINE
WHITE, 11" WIDE

EDGE LINE
WHITE, 4" WIDE

EDGE LINE
YELLOW, 4" WIDE

EXIT
207B

REMOVE AND REPLACE
WITH NEW E5-1a
(13) (14)

EXIT 207B
Santa Fe Dr
TO C 26
Alameda Ave
EXIT ONLY

REMOVE EXISTING SIGN STRUCTURE
INSTALL NEW GUIDE SIGN
AND CANTILEVER
(11) (12)

Stor-All
Storage

EXIT
25
M.P.H.
48W13-2
(60)

WRONG
WAY
REMOVE
(61)

Santa Fe Dr
25 NORTH
Ft Collins
REMOVE
(15)

0' 50' 100' 200'

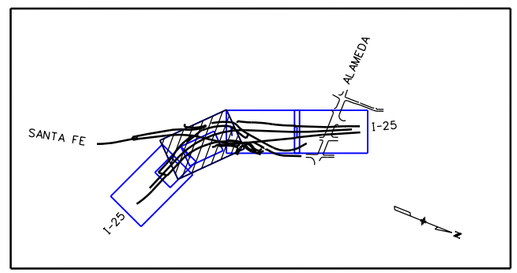

MAPKEY

Print Date: 9/27/2010	Sheet Revisions			Colorado Department of Transportation	As Constructed
File Name: 16311TRAF_PH2_I-25StripingPlan2.dgn	Date:	Comments	Init.	2000 South Holly Street Denver, CO 80222 Phone: 303-972-9112 FAX: 303-972-9114	No Revisions:
Horiz. Scale: 1:100 Vert. Scale: As Noted				Region 6 RLB	Revised:
Unit Information Unit Leader Initials					Void:
FELSBURG HOLT & ULLEVIG 6300 South Syracuse Way Centennial, CO 80111					

I-25/SANTA FE INTERCHANGE
I-25
SIGNING AND STRIPING PLAN

Designer:	SPG/LCL	Structure Numbers	
Detailer:	SYS		
Sheet Subset:	TRAFFIC	Subset Sheets: SS-2 of 11	

Project No./Code
IM 0254-394
16311
Sheet Number 317

Stan 1:48:08 PM K:\08276\16311\Phase 2\Traffic_ITS\Drawings\16311TRAF_PH2_I-25StripingPlan2.dgn
9/27/2010 CDOT-PDFDraftQuality_XM.pltcfg CDOT-PenTable.tbl

Know what's below. Call before you dig.

DELINEATORS	
TYPE I	QTY=
TYPE I (BARRIER)	QTY=
TYPE II	QTY=
TYPE II (BARRIER)	QTY=

South Platte River

SPEED LIMIT 45 — REMOVE (65) (66)

EXIT 207B — REMOVE (16)

405+00

MATCHLINE STA. 407+00 (SHEET SS-8)

635+00

EDGE LINE WHITE, 4" WIDE

LANE LINE WHITE, 7" WIDE (TYPICAL)

MATCHLINE I-25 STA. 632+00

SPEED LIMIT 45 — 48R2-1 (67)

EXIT 45 M.P.H. — REMOVE (68)

LANE LINE WHITE, 4" WIDE (RAMP 4)

RAMP 4

EDGE LINE YELLOW, 4" WIDE

SB I-25

NB I-25

410+00

EXIT 207B

85 SOUTH Santa Fe Dr

EXIT ONLY

REMOVE SIGNS AND CANTILEVER (17)

RIGHT 2 LANES MUST EXIT

EDGE LINE WHITE, 4" WIDE

640+00

130+00

Santa Fe Dr (Existing)

NB I-25 (Existing)

415+00

135+00

EXIT 207B — E5-1a (18)

MATCHLINE I-25 STA. 645+00

85 SOUTH Santa Fe Dr / 25 SOUTH Colo Spgs — REMOVE (23)

MATCHLINE STA 126+00 (SHEET SS-8)

RAMP 1

EDGE LINE YELLOW, 4" WIDE

EDGE LINE WHITE, 4" WIDE

CHANNELIZING GORE LINE WHITE, 7" WIDE

48W4-2R (69)

REMOVE AND REPLACE WITH NEW 48W4-1R (70) (71)

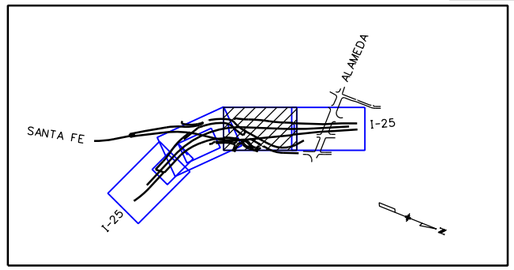

MAPKEY

0' 50' 100' 200'

Print Date: 9/27/2010	Sheet Revisions		
File Name: 16311TRAF_PH2_I-25StripingPlan3.dgn	Date:	Comments	Init.
Horiz. Scale: 1:100 Vert. Scale: As Noted			
Unit Information Unit Leader Initials			
FELSBURG HOLT & ULLEVIG 6300 South Syracuse Way Centennial, CO 80111			

Colorado Department of Transportation
DOT DEPARTMENT OF TRANSPORTATION
2000 South Holly Street
Denver, CO 80222
Phone: 303-972-9112 FAX: 303-972-9114
Region 6 RLB

As Constructed
No Revisions:
Revised:
Void:

I-25/SANTA FE INTERCHANGE
I-25
SIGNING AND STRIPING PLAN

Designer:	SPG/LCL	Structure Numbers	
Detailer:	SYS		
Sheet Subset:	TRAFFIC	Subset Sheets: SS-3 of 11	

Project No./Code
IM 0254-394
16311
Sheet Number 318

Stan 1:48:17 PM K:\08276\16311\Phase 2\Traffic_ITS\Drawings\16311TRAF_PH2_I-25StripingPlan3.dgn
9/27/2010 CDOT-PDFDraftQuality_XM.pltcfg CDOT-PenTable.tbl

Know what's below. Call before you dig.

DELINEATORS

TYPE I	QTY=
TYPE I (BARRIER)	QTY=
TYPE II	QTY=
TYPE II (BARRIER)	QTY=

EXIT 45 M.P.H.

48W13-2 (75)

EXIT 207A
Broadway
1/2 MILE

EXIT 207B
85
Santa Fe Dr
EXIT ONLY

SPECIAL - STA. 645+51 (19)

South Platte River

ALAMEDA AVE

MILE 208
EXISTING (TO REMAIN)

SPEED LIMIT 55 MINIMUM 40
EXISTING (TO REMAIN)

SPEED LIMIT 55 MINIMUM 40
EXISTING (TO REMAIN)

EDGE LINE WHITE, 4" WIDE

CHANNELIZING LINES WHITE, 11" WIDE

EDGE LINE YELLOW, 4" WIDE

650+00

655+00

LANE DROP LINE WHITE, 11" WIDE

MATCHLINE I-25 STA. 645+00

MATCHLINE I-25 STA. 658+00

RAMP 4

SB I-25

NB I-25

RAMP 1

LANE LINE WHITE, 7" WIDE (TYPICAL)

CHANNELIZING GORE LINE WHITE, 11" WIDE

EDGE LINE WHITE, 4" WIDE

KALAMATH ST

W. BYERS AVE

EXITS 209A-B
6 WEST
6th Avenue
1 MILE
EXISTING (TO REMAIN)

MILE 208
EXISTING (TO REMAIN)

Santa Fe Dr	1/4
Broadway	3/4
Washington St	1 1/4

(30)

REPLACE EXISTING PANEL WITH

Broadway	3/4
Washington St/ Emerson St	1 1/4

(31)

0' 50' 100' 200'

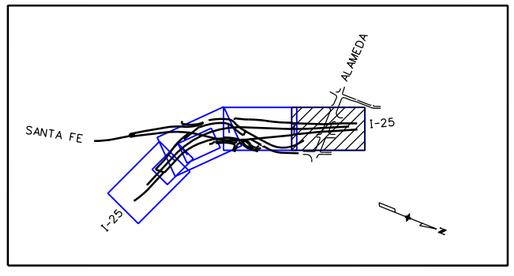

MAPKEY

Print Date: 9/27/2010	
File Name: 16311TRAF_PH2_I-25StripingPlan4.dgn	
Horiz. Scale: 1:100	Vert. Scale: As Noted
Unit Information	Unit Leader Initials

FELSBURG HOLT & ULLEVIG 6300 South Syracuse Way Centennial, CO 80111

Sheet Revisions

Date:	Comments	Init.

Colorado Department of Transportation
DOT DEPARTMENT OF TRANSPORTATION
2000 South Holly Street
Denver, CO 80222
Phone: 303-972-9112 FAX: 303-972-9114
Region 6 RLB

As Constructed

No Revisions:	
Revised:	
Void:	

I-25/SANTA FE INTERCHANGE
I-25
SIGNING AND STRIPING PLAN

Designer:	SPG/LCL	Structure Numbers	
Detailer:	SYS		
Sheet Subset:	TRAFFIC	Subset Sheets:	SS-4 of 11

Project No./Code	
IM 0254-394	
16311	
Sheet Number	319

Stan 1:48:23 PM K:\08276\16311\Phase 2\Traffic_ITS\Drawings\16311TRAF_PH2_I-25StripingPlan4.dgn
9/27/2010 CDOT-PDFDraftQuality_XM.pltcfg CDOT-PenTable.tbl

811 Know what's below. Call before you dig.

DELINEATORS	
TYPE I	QTY=
TYPE I (BARRIER)	QTY=
TYPE II	QTY=
TYPE II (BARRIER)	QTY=

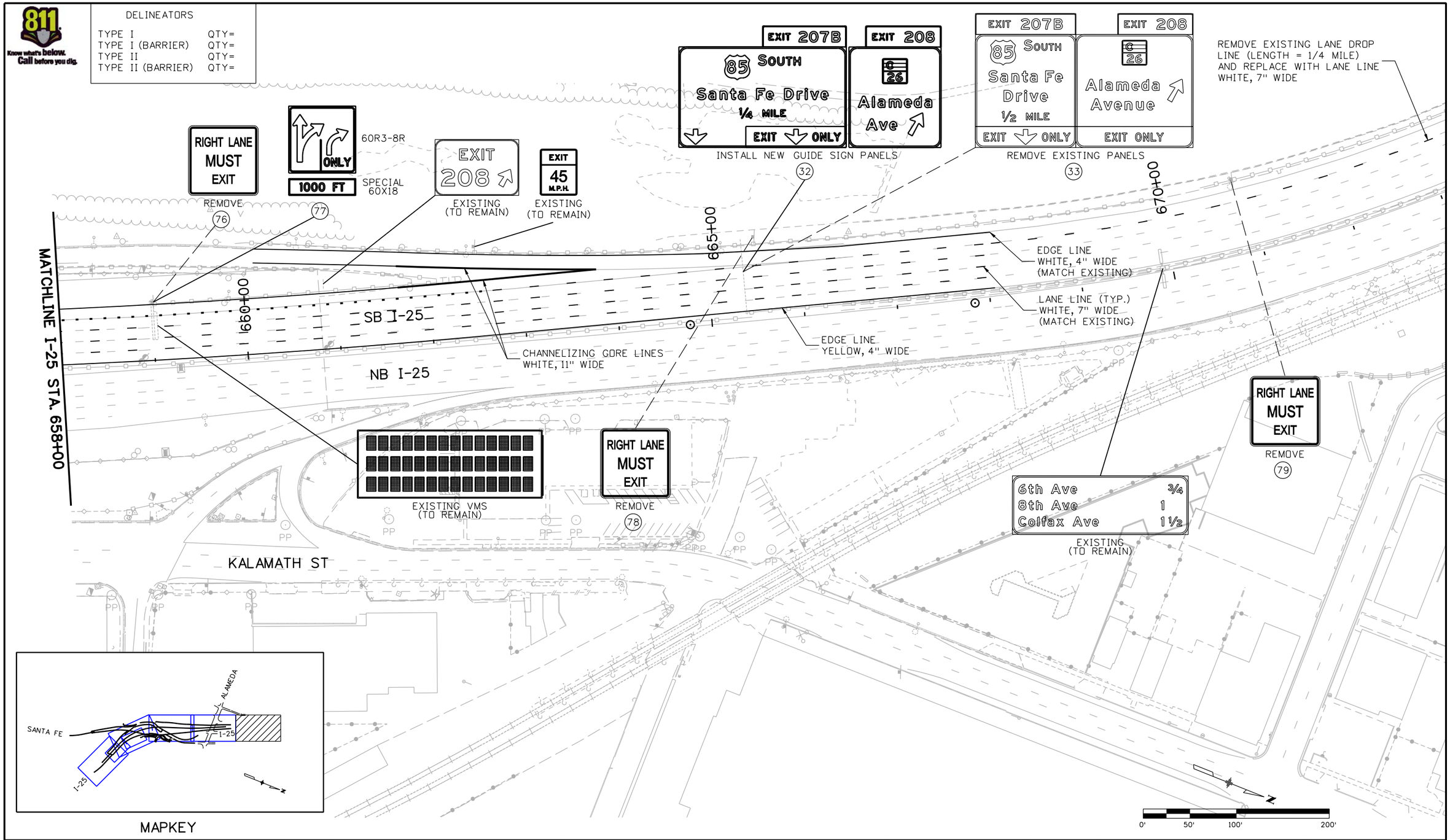

Print Date: 9/27/2010	Sheet Revisions		
File Name: 16311TRAF_PH2_I-25StripingPlan5.dgn	Date:	Comments	Init.
Horiz. Scale: 1:100 Vert. Scale: As Noted			
Unit Information Unit Leader Initials			
FELSBURG HOLT & ULLEVIG 6300 South Syracuse Way Centennial, CO 80111			

Colorado Department of Transportation
DOT DEPARTMENT OF TRANSPORTATION
2000 South Holly Street
Denver, CO 80222
Phone: 303-972-9112 FAX: 303-972-9114
Region 6 RLB

As Constructed
No Revisions:
Revised:
Void:

I-25/SANTA FE INTERCHANGE
I-25
SIGNING AND STRIPING PLAN

Designer:	SPG/LCL	Structure Numbers	
Detailer:	SYS		
Sheet Subset:	TRAFFIC	Subset Sheets:	SS-5 of 11

Project No./Code	
IM 0254-394	
16311	
Sheet Number	320

Stan 1:47:53 PM K:\08276\16311\Phase 2\Traffic_ITS\Drawings\16311TRAF_PH2_I-25StripingPlan5.dgn
9/27/2010 CDOT-PDFDraftQuality_XM.pltcfg CDOT-PenTable.tbl

811 Know what's below. Call before you dig.

DELINEATORS	
TYPE I	QTY=
TYPE I (BARRIER)	QTY=
TYPE II	QTY=
TYPE II (BARRIER)	QTY=

W. MISSISSIPPI AVE

W. TENNESSEE AVE

Vanderbilt Park

SB SANTA FE

NB SANTA FE

South Platte River

EXISTING HOV SYMBOL

HOV LANE
ENDS 1/2 MILE
36R3-12b
(86)

SPEED LIMIT 45
36R2-1
(85)

48R3-8R
ONLY
1000 FT
SPECIAL 48X12
(87)

EXISTING HOV SYMBOL

BM

BM

EXPRESS LANE
2 OR MORE PERSONS PER VEHICLE ONLY WHEN GREEN

EXISTING (TO REMAIN)

SPEED LIMIT 35
48W3-5
(88)

HOV SYMBOL WHITE

25 SOUTH
Colorado Springs
RIGHT 1/2 MILE

25 NORTH
Fort Collins
1/4 MILE
EXIT ONLY

SPECIAL - STA. 698+80
(1)

25 SOUTH
Colo Spgs
1/4 MILE

REMOVE
(2)

CHANNELIZING LINE WHITE, 8" WIDE

LANE DROP LINE WHITE, 8" WIDE

705+00

LANE LINE WHITE, 4" WIDE

MATCHLINE NB SANTA FE STA. 708+00

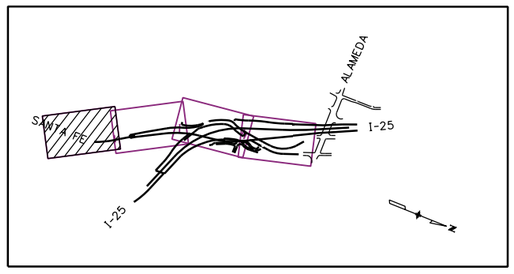

MAPKEY

0' 50' 100' 200'

Print Date: 9/27/2010	Sheet Revisions		
File Name: 16311TRAF_PH2_SantaFeStripingPlan1.dgn	Date:	Comments	Init.
Horiz. Scale: 1:100 Vert. Scale: As Noted			
Unit Information Unit Leader Initials			
FELSBURG HOLT & ULLEVIG 6300 South Syracuse Way Centennial, CO 80111			

Colorado Department of Transportation
DOT DEPARTMENT OF TRANSPORTATION
2000 South Holly Street
Denver, CO 80222
Phone: 303-972-9112 FAX: 303-972-9114
Region 6 RLB

As Constructed
No Revisions:
Revised:
Void:

I-25/SANTA FE INTERCHANGE
SANTA FE DRIVE
SIGNING AND STRIPING PLAN

Designer:	LCL	Structure Numbers	
Detailer:	LCL		
Sheet Subset:	TRAFFIC	Subset Sheets:	SS-6 of 11

Project No./Code
IM 0254-394
16311
Sheet Number 321

Stan 1:48:38 PM K:\08276\16311\Phase 2\Traffic_ITS\Drawings\16311TRAF_PH2_SantaFeStripingPlan1.dgn
9/27/2010 CDOT-PDFDraftQuality_XM.pltcfg CDOT-PenTable.tbl

Know what's below. Call before you dig.

DELINEATORS	
TYPE I	QTY=
TYPE I (BARRIER)	QTY=
TYPE II	QTY=
TYPE II (BARRIER)	QTY=

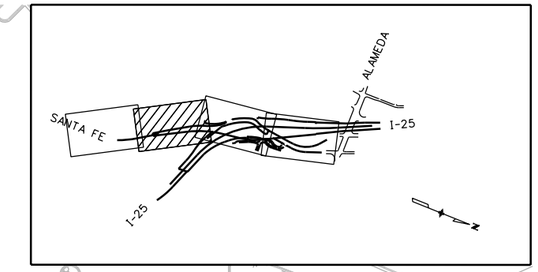

Vanderbilt Park

MAPKEY

SB SANTA FE

South Platte River

NB SANTA FE

OHIO AVE (Closed)

MATCHLINE NB SANTA FE STA. 708+00

MATCHLINE NB SANTA FE STA. 721+00

710+00

715+00

720+00

RAMP 1

A) 24M3-3i — SOUTH — NORTH — D) 24M3-1i

B) 24M1-1 — INTERSTATE 25 — INTERSTATE 25 — E) 24M1-1

C) 21M5-1Ri — F) 21M6-2i

99

SPECIAL - STA. 712+00
8

SPEED LIMIT 35
36R2-1
98

48W3-3
100

SPECIAL-STA. 719+10
3

RIGHT LANE MUST TURN RIGHT
30R3-7R
101

CHANNELIZING LINE WHITE, 8" WIDE

HOV SYMBOL WHITE (TYPICAL)

LANE LINE WHITE, 4" WIDE (TYPICAL)

CHANNELIZING GORE LINES WHITE, 11" WIDE

LANE DROP LINE WHITE, 8" WIDE

EDGE LINE WHITE, 4" WIDE

EDGE LINE YELLOW, 4" WIDE

RIGHT LANE MUST EXIT
48R3-7AR
89

SOUTH Colo Spgs
REMOVE
5

48R3-8R
90

RAMP 45 M.P.H.
48W13-3
91

RAMP 20 M.P.H.
REMOVE
92 93

NORTH Ft Collins NEXT RIGHT
REMOVE
6

REMOVE
94 95 96

RIGHT LANE MUST EXIT
REMOVE
97

0' 50' 100' 200'

Print Date: 9/27/2010			
File Name: 16311TRAF_PH2_SantaFeStripingPlan2.dgn			
Horiz. Scale: 1:100	Vert. Scale: As Noted		
Unit Information	Unit Leader Initials		

FELSBURG HOLT & ULLEVIG 6300 South Syracuse Way Centennial, CO 80111

0000

Sheet Revisions		
Date:	Comments	Init.

Colorado Department of Transportation
DEPARTMENT OF TRANSPORTATION
2000 South Holly Street
Denver, CO 80222
Phone: 303-972-9112 FAX: 303-972-9114
Region 6 RLB

As Constructed
No Revisions:
Revised:
Void:

I-25/SANTA FE INTERCHANGE
SANTA FE DRIVE
SIGNING AND STRIPING PLAN

Designer:	LCL	Structure Numbers	
Detailer:	LCL		
Sheet Subset:	TRAFFIC	Subset Sheets:	SS-7 of 11

Project No./Code
IM 0254-394
16311
Sheet Number 322

Stan 1:48:46 PM K:\08276\16311\Phase 2\Traffic_ITS\Drawings\16311TRAF_PH2_SantaFeStripingPlan2.dgn
9/27/2010 CDOT-PDFDraftQuality_XM.pltcfg CDOT-PenTable.tbl

Know what's below. Call before you dig.

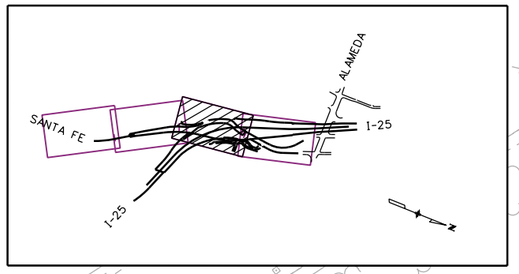

MAPKEY

DELINEATORS

TYPE I	QTY=
TYPE I (BARRIER)	QTY=
TYPE II	QTY=
TYPE II (BARRIER)	QTY=

South Platte River

A) 24M3-3i SOUTH INTERSTATE 25
B) 24M1-1
C) 21M6-1i (108)

48W4-3R (109)

36W1-2aR (110)

48W4-6L (111)

CHANNELIZING LINE WHITE, 8" WIDE (TYPICAL)

EDGE LINE WHITE, 4" WIDE

LANE DROP LINE WHITE, 8" WIDE

EDGE LINE YELLOW, 4" WIDE

MATCHLINE STA 407+00 (SHEET SS-3)

24R4-7 (112) LEFT LANE MUST TURN LEFT 30R3-7I

CHANNELIZING GORE LINE WHITE, 8" WIDE

HOV LANE NORTH 25 Ft Collins LEFT 1/4 MILE
REMOVE (4)

REMOVE (105) (106)

24R4-7 (107)

NORTH 25 Ft Collins
REMOVE (7)

EDGE LINE YELLOW, 4" WIDE

DOUBLE CENTERLINE YELLOW, 4" WIDE (TYPICAL)

EDGE LINE WHITE, 4" WIDE

LANE LINE WHITE, 4" WIDE (TYPICAL)

STOP LINE WHITE, 24" WIDE (TYPICAL)

DOTTED LINE WHITE, 8" WIDE

Santa Fe Drive (Existing)

SPEED LIMIT 45
REMOVE (122)

MATCHLINE SB SANTA FE STA. 818+62.17

MATCHLINE NB SANTA FE STA. 735+00

MATCHLINE STA 126+00 (SHEET SS-3)

YIELD SYMBOLS WHITE, 24"X36"

30R3-4 (116)

ONLY 30R3-5L (117)

MATCHLINE NB SANTA FE STA. 721+00

RAMP 4

SB SANTA FE

NB SANTA FE

RAMP 1

RAMP 3

395+00 310+00 725+00 810+00 312+16 400+00 815+00 405+00 120+00 115+00

YIELD 36R1-2 (114)

A) 24R9-3a
B) 24R5-6 (113)

MATCHLINE STA 307+00 (SHEET SS-2)

HOV LANE ENDS 36R3-12a (115)

REMOVE FLASHING BEACON AND SIGN (118) (119)

REMOVE (120)

SPEED LIMIT 35
REMOVE (121) (122)

EDGE LINE YELLOW, 4" WIDE

LANE LINE WHITE, 7" WIDE

EDGE LINE WHITE, 4" WIDE

N

0' 50' 100' 200'

Print Date: 9/27/2010			
File Name: 16311TRAF_PH2_SantaFeStripingPlan3.dgn			
Horiz. Scale: 1:100	Vert. Scale: As Noted		
Unit Information	Unit Leader Initials		

FELSBURG HOLT & ULLEVIG 6300 South Syracuse Way Centennial, CO 80111

Sheet Revisions

Date:	Comments	Init.

Colorado Department of Transportation
DEPARTMENT OF TRANSPORTATION
2000 South Holly Street
Denver, CO 80222
Phone: 303-972-9112 FAX: 303-972-9114
Region 6 RLB

As Constructed

No Revisions:	
Revised:	
Void:	

I-25/SANTA FE INTERCHANGE
SANTA FE DRIVE
SIGNING AND STRIPING PLAN

Designer:	LCL	Structure Numbers	
Detailer:	LCL		
Sheet Subset:	TRAFFIC	Subset Sheets:	SS-8 of 11

Project No./Code	
IM 0254-394	
16311	
Sheet Number	323

Stan 1:48:53 PM K:\08276\16311\Phase 2\Traffic_ITS\Drawings\16311TRAF_PH2_SantaFeStripingPlan3.dgn
9/27/2010 CDOT-PDFDraftQuality_XM.pltcfg CDOT-PenTable.tbl

Know what's below. Call before you dig.

DELINEATORS	
TYPE I	QTY=
TYPE I (BARRIER)	QTY=
TYPE II	QTY=
TYPE II (BARRIER)	QTY=

0' 50' 100' 200'

LEFT LANE MUST TURN LEFT
1000 FT
30R3-7L
SPECIAL 30X10
126

REMOVE
125

RIGHT LANE ENDS
500 FEET
REMOVE
127

25
36W1-2aL
128

MATCHLINE SB SANTA FE STA. 818+62.17

MATCHLINE NB SANTA FE STA. 735+00

820+00

SOUTH 25 Colo Spgs
REMOVE
26

SOUTH 25 LEFT LANE
SPECIAL
27

NB I-25 (Existing)

48W1-7
129

REMOVE
130

RAMP 15 M.P.H.
REMOVE
131

RIGHT LANE MUST TURN RIGHT
REMOVE
132 133

825+00

SOUTH 25 Colo Spgs 1/4 MILE
NORTH 25 Ft Collins EXIT ONLY
REMOVE
28

SOUTH 25 SECOND LEFT 1/2 MILE
SPECIAL
29

SPEED LIMIT 35
EXISTING
(TO REMAIN)

SOUTH
ADD M3-3i PANEL
134

TO INTERSTATE COLORADO 25 SOUTH 85
EXISTING ROUTE ASSEMBLY LOCATED IN SE CORNER OF ALAMEDA/KALAMATH (TO REMAIN)

SB SANTA FE

LANE LINE WHITE, 4" WIDE (TYPICAL)

EDGE LINE YELLOW, 4" WIDE

EDGE LINE WHITE, 4" WIDE

CHANNELIZING LINES WHITE, 8" WIDE

CHANNELIZING LINE WHITE, 8" WIDE

EDGE LINE YELLOW, 4" WIDE

RAMP 2

NB SANTA FE

ALAMEDA AVE

745+00

EDGE LINE WHITE, 4" WIDE

LEFT LANE MUST TURN LEFT
EXISTING
(TO REMAIN)

SPEED LIMIT 30
EXISTING
(TO REMAIN)

TO NORTH INTERSTATE COLORADO 25
24M4-5i
24M3-1i
24M1-1A
21M6-3i
135

LEFT LANE MUST TURN LEFT
EXISTING
(TO REMAIN)

RIGHT LANE MUST TURN RIGHT
EXISTING
(TO REMAIN)

BIKE XING
EXISTING
(TO REMAIN)

SOUTH INTERSTATE COLORADO 25
REMOVE
136

LEFT LANE MUST TURN LEFT
EXISTING
(TO REMAIN)

TO NORTH INTERSTATE COLORADO 25
24M4-5i
24M3-1i
24M1-1A
21M5-1Li
137

REFER TO SS-11 FOR INTERSECTION SIGNING AND STRIPING DETAILS

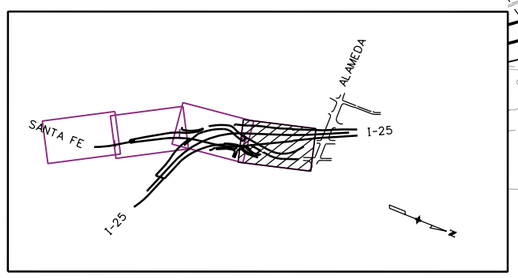

MAPKEY

Print Date: 9/27/2010	Sheet Revisions		
File Name: 16311TRAF_PH2_SantaFeStripingPlan4.dgn	Date:	Comments	Init.
Horiz. Scale: 1:100 Vert. Scale: As Noted			
Unit Information Unit Leader Initials			
FELSBURG HOLT & ULLEVIG 6300 South Syracuse Way Centennial, CO 80111			

Colorado Department of Transportation
DOT DEPARTMENT OF TRANSPORTATION
2000 South Holly Street
Denver, CO 80222
Phone: 303-972-9112 FAX: 303-972-9114
Region 6 RLB

As Constructed	
No Revisions:	
Revised:	
Void:	

I-25/SANTA FE INTERCHANGE SANTA FE DRIVE SIGNING AND STRIPING PLAN

Designer:	LCL	Structure Numbers	
Detailer:	LCL		
Sheet Subset:	TRAFFIC	Subset Sheets:	SS-9 of 11

Project No./Code	
IM 0254-394	
16311	
Sheet Number	324

Stan 1:48:59 PM K:\08276\16311\Phase 2\Traffic_ITS\Drawings\16311TRAF_PH2_SantaFeStripingPlan4.dgn
9/27/2010 CDOT-PDFDraftQuality_XM.pltcfg CDOT-PenTable.tbl

Know what's below. Call before you dig.

DELINEATORS	
TYPE I	QTY=
TYPE I (BARRIER)	QTY=
TYPE II	QTY=
TYPE II (BARRIER)	QTY=

ONE WAY 36R6-1L

ONE WAY 36R6-1R

DO NOT ENTER 30R5-1 (148) (149)

A) FRONT SPEED LIMIT 25 36R2-1 (145)

B) BACK WRONG WAY 36R5-1a (146)

SPEED LIMIT 40 REMOVE (144)

REMOVE (143)

STOP REMOVE (142)

48W3-3 (140) (141)

MATCHLINE STA 207+00 (SHEET SS-2)

REMOVE (154)

NB I-25

EDGE LINE YELLOW, 4" WIDE

RAMP 2

DOUBLE CENTERLINE YELLOW, 4" WIDE (TYPICAL)

EDGE LINE WHITE, 4" WIDE

REMOVE (147)

30R3-2 (150)

RIGHT LANE MUST TURN RIGHT 30R3-7r (157)

RIGHT LANE MUST TURN RIGHT 30R3-7r (161)

RIGHT LANE MUST TURN RIGHT REMOVE (158)

STOP 36R1-1 (159)

REMOVE (155) (156)

STOP REMOVE (160)

STOP EXISTING (TO REMAIN)

LANE LINE WHITE, 4" WIDE (TYPICAL)

BACK DO NOT ENTER 30R5-1 FRONT 30R3-1 (151)

ONLY 30R3-5R (152)

DO NOT ENTER 30R5-1 (153)

SB SANTA FE

NB SANTA FE

215+08

REMOVE (164) (165)

48R3-8 (SPECIAL) ONLY ONLY (162) (163)

REFER TO SHEET SS-11 FOR INTERSECTION SIGNING AND STRIPING DETAILS

To C-26 Alameda Ave SPECIAL (24)

ALAMEDA AVENUE SOUTH 85 SANTA FE DR REMOVE (25)

Home Depot Parking Lot

MAPKEY

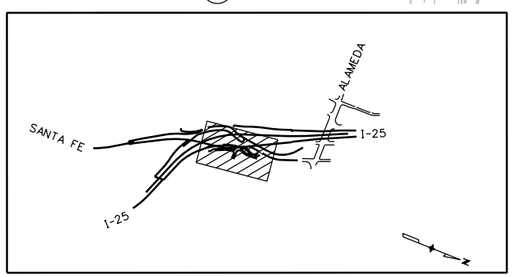

0' 50' 100' 200'

Print Date: 9/27/2010			
File Name: 16311TRAF_PH2_HomeDepotStripingPlan1.dgn			
Horiz. Scale: 1:100	Vert. Scale: As Noted		
Unit Information	Unit Leader Initials		

FELSBURG HOLT & ULLEVIG 6300 South Syracuse Way Centennial, CO 80111

Sheet Revisions		
Date:	Comments	Init.

Colorado Department of Transportation
DEPARTMENT OF TRANSPORTATION
2000 South Holly Street
Denver, CO 80222
Phone: 303-972-9112 FAX: 303-972-9114
Region 6 RLB

As Constructed

No Revisions:	
Revised:	
Void:	

I-25/SANTA FE INTERCHANGE RAMP 2 (HOME DEPOT ACCESS) SIGNING AND STRIPING PLAN

Designer:	LCL	Structure Numbers	
Detailer:	LCL		
Sheet Subset:	TRAFFIC	Subset Sheets:	SS-10 of 11

Project No./Code	
IM 0254-394	
16311	
Sheet Number	325

Stan 1:49:07 PM K:\08276\16311\Phase 2\Traffic_ITS\Drawings\16311TRAF_PH2_HomeDepotStripingPlan1.dgn
9/27/2010 CDOT-PDFDraftQuality_XM.pltcfg CDOT-PenTable.tbl

Know what's below. Call before you dig.

0' 25' 50' 100'

SPAN WIRE MOUNTED SIGNS

ONLY — 30R3-5 (170) (171)

30R3-8 (SPECIAL) (172)

ONLY — 30R3-5R (173)

ONLY — REMOVE (174)

24R4-7 (175)

REMOVE (176)

ONLY — REMOVE (177)

NORTH / INTERSTATE 25 — REMOVE ROUTE SIGNS AND REPLACE w/ 24R4-7 (178) (179)

REMOVE (180)

EXISTING STREET NAME AND ADDRESS PANELS TO REMAIN (NW AND SE SIGNAL POLES)

(181)

REMOVE EXISTING ROUTE SIGN ASSEMBLY

SB SANTA FE

NB SANTA FE

RIGHT LANE MUST TURN RIGHT — EXISTING (TO REMAIN)

(170)

EXISTING (TO REMAIN)

(171) (172) (173)

(174)

STOP LINE WHITE, 24" WIDE (TYPICAL)

CHANNELIZING ISLAND WHITE, 11" WIDE

LANE LINE WHITE, 4" WIDE (TYPICAL)

HOME DEPOT ACCESS

DO NOT ENTER — REMOVE (191)

YIELD — EXISTING (TO REMAIN)

CHANNELIZING LINES WHITE, 11" WIDE

215+06

RAMP 2

YIELD — REMOVE (189) (190)

EXISTING TO REMAIN (ALL 4 POLES)

DOUBLE CENTERLINE YELLOW, 4" WIDE

DOTTED CHANNELIZING LINE WHITE, 8" WIDE (TYPICAL)

DOUBLE DOTTED CENTERLINE YELLOW, 4" WIDE

EDGE LINE WHITE, 4" WIDE (TYPICAL)

EDGE LINE YELLOW, 4" WIDE

Home Depot Parking Lot

24R4-7 (182)

ONLY — REMOVE (183) (184)

SOUTH 85 / NORTH 85 — REMOVE (185)

REMOVE (186)

SOUTH INTERSTATE 25 / NORTH INTERSTATE 25 — REMOVE (187)

SOUTH 85 — 24M3-3 24M1-4 21M6-1

SOUTH INTERSTATE 25 — 24M3-3i 24M1-1A 21M6-1i

NORTH INTERSTATE 25 — 24M3-1i 24M1-1A 21M6-1i (188)

Print Date: 9/27/2010	Sheet Revisions		
File Name: 16311TRAF_PH2_HomeDepotStripingPlan2.dgn	Date:	Comments	Init.
Horiz. Scale: 1:50 Vert. Scale: As Noted			
Unit Information Unit Leader Initials			
FELSBURG HOLT & ULLEVIG 6300 South Syracuse Way Centennial, CO 80111			

Colorado Department of Transportation
DOT — DEPARTMENT OF TRANSPORTATION
2000 South Holly Street
Denver, CO 80222
Phone: 303-972-9112 FAX: 303-972-9114
Region 6 RLB

As Constructed
No Revisions:
Revised:
Void:

I-25/SANTA FE INTERCHANGE
RAMP 2 (HOME DEPOT ACCESS)
SIGNING AND STRIPING PLAN

Designer: SPG/LCL
Detailer: SYS
Sheet Subset: TRAFFIC
Structure Numbers:
Subset Sheets: SS-11 of 11

Project No./Code
IM 0254-394
16311
Sheet Number 326

Stan 1:49:13 PM K:\08276\16311\Phase 2\Traffic_ITS\Drawings\16311TRAF_PH2_HomeDepotStripingPlan2.dgn
9/27/2010 CDOT-PDFDraftQuality_XM.pltcfg CDOT-PenTable.tbl

TABULATION OF TRAFFIC SIGNAL AND ITS ITEMS

ITEM NO.	ITEM DESCRIPTION	UNITS	Ramp 2 TS-2	Home Depot TS-3	Ramp 3 TS-4	ITS Devices TS-5	PROJECT TOTAL	REMARKS
202-00831	REMOVAL OF TRAFFIC SIGNAL HEAD	EACH	4	-	-	-	4	
202-00840	REMOVAL OF TRAFFIC SIGNAL POLE	EACH	-	-	-	2	2	
210-00473	RESET TV CAMERAS	EACH	-	-	-	1	1	CDOT CCTV CAMERA EQUIPMENT
210-00848	RESET TRAFFIC SIGNAL CONTROLLER AND CABINET	EACH	-	-	-	1	1	ITS CONTROLLER CABINET
210-00910	RESET TRAFFIC COUNTER (PERMANENT)	EACH	-	-	-	4	4	ATR AND TRAVEL TIME DETECTION EQUIPMENT
503-00024	DRILLED CAISSON (24 INCH)	LF	-	-	-	14	14	CDOT LIGHT STANDARD M-613-1 FOOTING
503-00048	DRILLED CAISSON (48 INCH)	LF	-	-	48	-	48	CDOT STD. S-614-40 FOOTING
613-01200	2 INCH ELECTRICAL CONDUIT (PLASTIC)	LF	-	240	340	510	1090	
613-01300	3 INCH ELECTRICAL CONDUIT (PLASTIC)	LF	-	50	40		90	
613-07000	PULL BOX (SPECIAL)	EACH	-	2	1		3	WATER VALVE TYPE
613-07026	PULL BOX (16"X24"X12")	EACH	-	1	1	2	4	ELECTRIC
613-07023	PULL BOX (24"X36"X24")	EACH	-	2	1	-	3	TRAFFIC
613-07039	PULL BOX (30"X48"X18") DEEP	EACH	-	-	-	2	2	CDOT ITS VAULT
613-32300	LIGHT STANDARD STEEL (30 FOOT)	EACH	-	-	-	2	2	NO LUMINAIRE ARMS
614-70336	TRAFFIC SIGNAL FACE (12-12-12)	EACH	1	12	6	-	19	LED TYPE
614-70448	TRAFFIC SIGNAL FACE (12-12-12-12-12)	EACH	1	-	-	-	1	LED TYPE
614-72855	TRAFFIC SIGNAL CONTROLLER CABINET	EACH	-	1	1	-	2	
614-72875	LOOP DETECTOR WIRE	LF	-	1095	365	-	1460	365 LF PER DETECTOR
614-81160	TRAFFIC SIGNAL-LIGHT POLE STEEL (1-60 FOOT MAST ARM)	EACH	-	-	1	-	1	CDOT STD. S-614-40
614-85312	TRAFFIC SIGNAL SPAN WIRE POLE (12 INCH)	EACH	-	1	-		1	FEDERAL GREEN IN COLOR
614-85362	TRAFFIC SIGNAL-LIGHT SPAN WIRE POLE (12 INCH)	EACH	-	3	-		3	FEDERAL GREEN IN COLOR
614-86246	TRAFFIC SIGNAL CONTROLLER (170E-HC11)	EACH	-	1	1		2	

Print Date: 9/27/2010
File Name: 16311TRAF_PH2_Signal_TAB01.dgn
Horiz. Scale: 1:1 Vert. Scale: As Noted
Unit Information Unit Leader Initials

FELSBURG HOLT & ULLEVIG 6300 South Syracuse Way Centennial, CO 80111

Sheet Revisions

Date:	Comments	Init.

Colorado Department of Transportation
CDOT DEPARTMENT OF TRANSPORTATION
2000 South Holly Street
Denver, CO 80222
Phone: 303-972-9112 FAX: 303-972-9114
Region 6 RLB

As Constructed
No Revisions:
Revised:
Void:

I-25/SANTA FE INTERCHANGE
TABULATION OF TRAFFIC SIGNAL AND ITS ITEMS

Designer: LCL
Detailer: LCL
Sheet Subset: TRAFFIC
Structure Numbers
Subset Sheets: TS-1 of 5

Project No./Code
IM 0254-394
16311
Sheet Number 327

Stan 1:49:17 PM K:\08276\16311\Phase 2\Trafic_ITS\Drawings\16311TRAF_PH2_Signal_TAB01.dgn
9/27/2010 CDOT-PDFDraftQuality_XM.pltcfg CDOT-PenTable.tbl

811 Know what's below. Call before you dig.

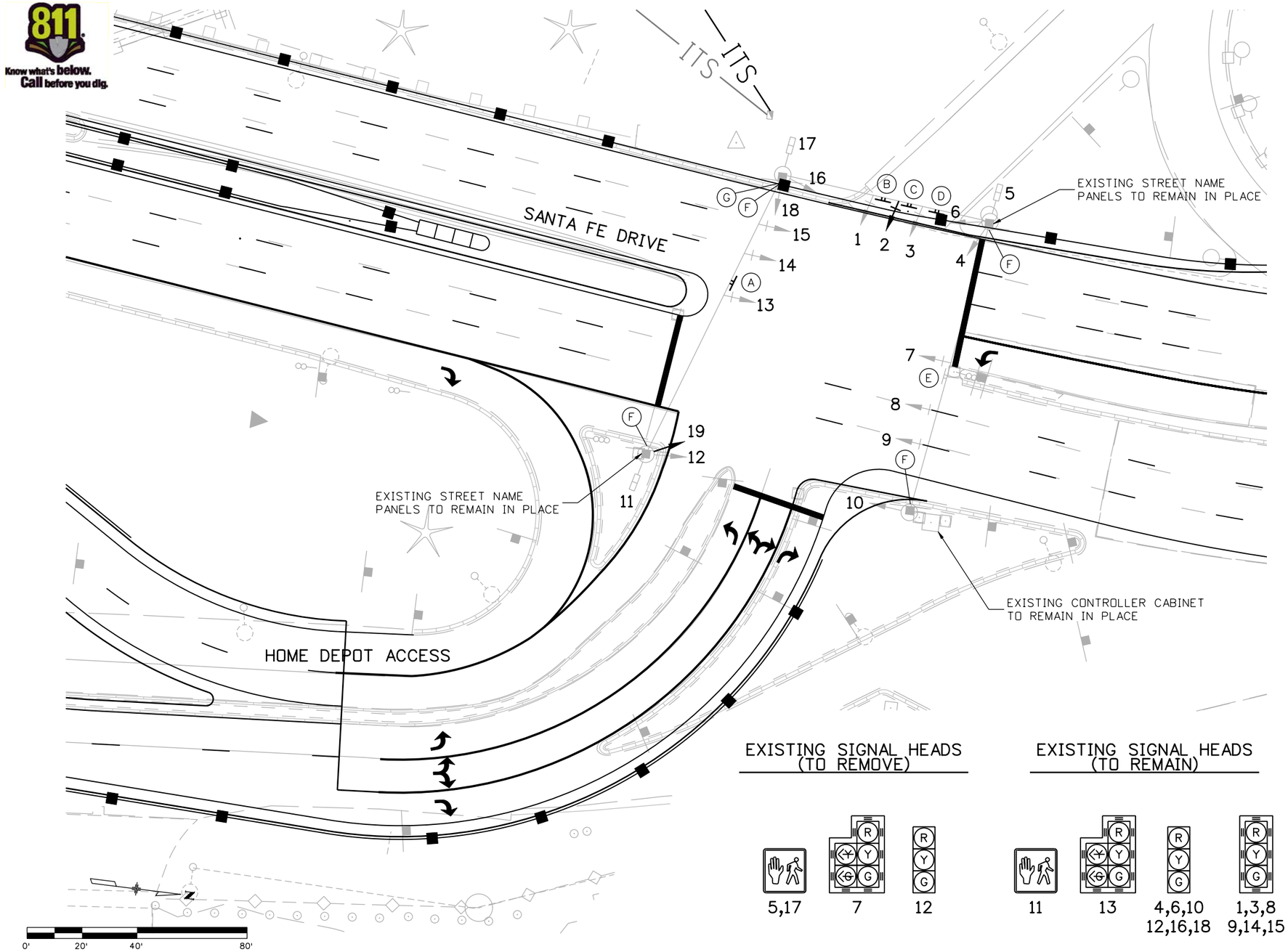

LEGEND

EXISTING	DESCRIPTION
	TRAFFIC SIGNAL SPAN WIRE AND POLE
	TRAFFIC SIGNAL HEAD WITH BACKPLATE
	TRAFFIC SIGNAL HEAD
	PEDESTRIAN SIGNAL HEAD
	SPAN WIRE MOUNTED SIGN
	EXISTING LUMINAIRE

PROPOSED	
	TRAFFIC SIGNAL HEAD WITH BACKPLATE
	TRAFFIC SIGNAL HEAD
	SPAN WIRE MOUNTED SIGN

TRAFFIC SIGNS (Signal Pole/Span Wire Mounted)

R3-5L 30"X36" (A)(B)

R3-8 (SPECIAL) 30"X36 (C)

R3-5R 30"X36" (D)

EXISTING (REMOVE) (E)

EXISTING (TO REMAIN) (F)

EXISTING (REMOVE) (G)

EXISTING SIGNAL HEADS (TO REMOVE)

5,17 | 7 | 12

EXISTING SIGNAL HEADS (TO REMAIN)

11 | 13 | 4,6,10 12,16,18 | 1,3,8 9,14,15

PROPOSED SIGNAL HEADS (NEW)

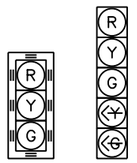

2 | 19

Print Date: 9/27/2010	Sheet Revisions			Colorado Department of Transportation	As Constructed
File Name: 16311TRAF_PH2_Signal_Plan1.dgn	Date:	Comments	Init.	2000 South Holly Street, Denver, CO 80222, Phone: 303-972-9112 FAX: 303-972-9114	No Revisions:
Horiz. Scale: 1:40 Vert. Scale: As Noted				Region 6 RLB	Revised:
Unit Information Unit Leader Initials					Void:
FELSBURG HOLT & ULLEVIG 6300 South Syracuse Way Centennial, CO 80111					

I-25/SANTA FE INTERCHANGE TRAFFIC SIGNAL MODIFICATIONS (450 S. SANTA FE DR)			
Designer: LCL	Structure Numbers		Project No./Code: IM 0254-394
Detailer: LCL			16311
Sheet Subset: TRAFFIC	Subset Sheets: TS-2 of 5		Sheet Number 328

Stan 1:49:23 PM K:\08276\16311\Phase 2\Traffic_ITS\Drawings\16311TRAF_PH2_Signal_Plan1.dgn
9/27/2010 CDOT-PDFDraftQuality_XM.pltcfg CDOT-PenTable.tbl

Know what's below. Call before you dig.

PROPOSED TRAFFIC SIGNS
(SPAN WIRE MOUNTED)

R3-5R
30"X36"
(A)

PROPOSED SIGNAL HEADS

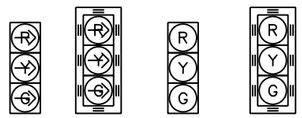

2,4 | 3 | 1,5 6,9,12 | 7,8 10,11

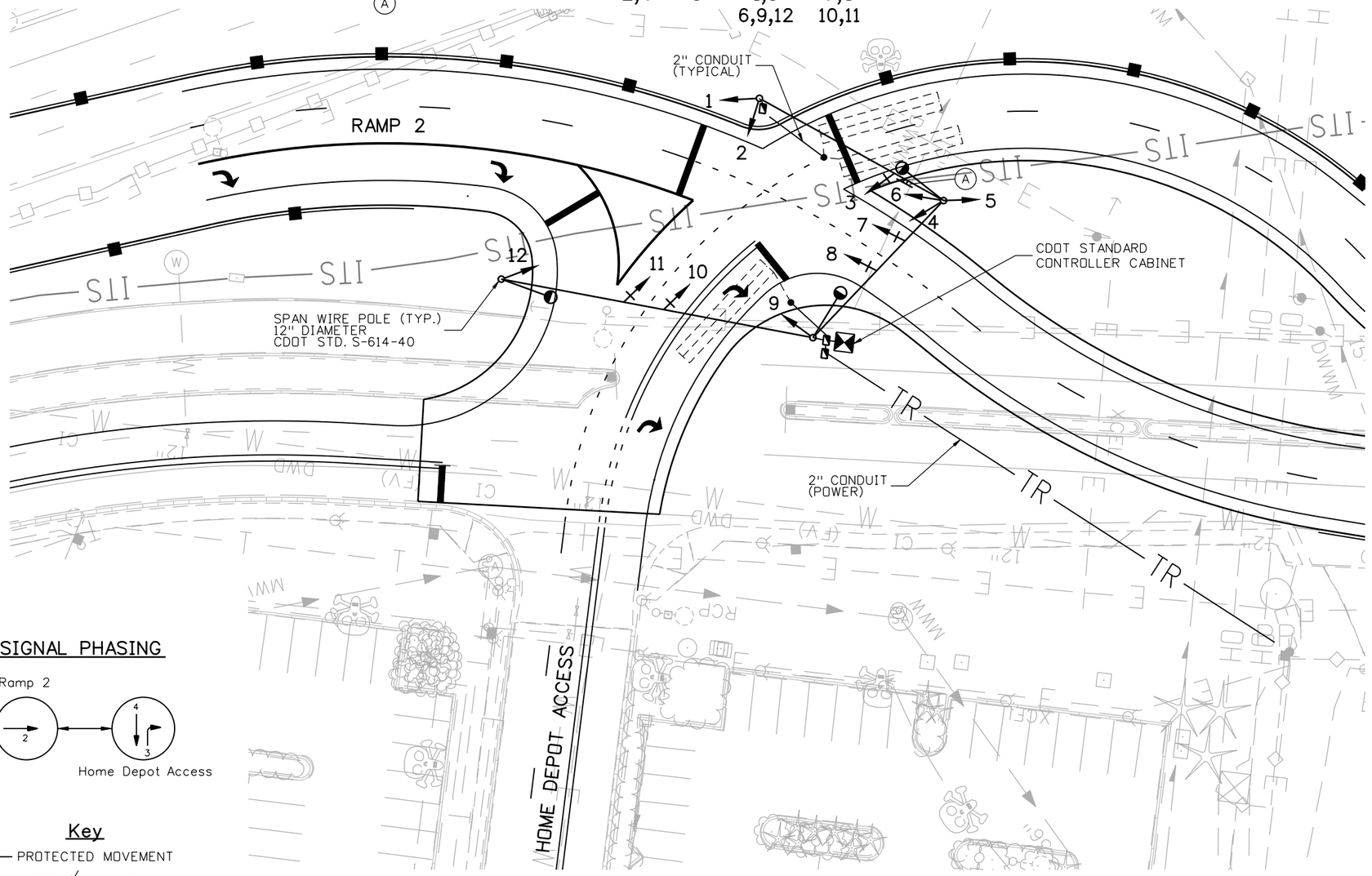

LEGEND

PROPOSED	DESCRIPTION
	TRAFFIC SIGNAL SPAN WIRE AND POLE
	TRAFFIC SIGNAL HEAD WITH BACKPLATE
	TRAFFIC SIGNAL HEAD
	TRAFFIC SIGNAL CONTROLLER AND CABINET
	PULL BOX
	PULL BOX - SPECIAL
TR	CONDUIT - PVC SCHEDULE 40
	MAST ARM OR POLE MOUNTED SIGN
	LUMINAIRE - 400 WATT HPS
	VEHICLE LOOP DETECTOR (6'X 40')

SIGNAL PHASING

Ramp 2

Home Depot Access

Key

PROTECTED MOVEMENT

x PHASE ∅ NUMBER

N

0' 20' 40' 80'

Print Date: 9/27/2010		Sheet Revisions			Colorado Department of Transportation
File Name: 16311TRAF_PH2_Signal_Plan2.dgn		Date:	Comments	Init.	2000 South Holly Street, Denver, CO 80222
Horiz. Scale: 1:40	Vert. Scale: As Noted				Phone: 303-972-9112 FAX: 303-972-9114
Unit Information	Unit Leader Initials				Region 6 RLB
FELSBURG HOLT & ULLEVIG 6300 South Syracuse Way Centennial, CO 80111					

As Constructed	I-25/SANTA FE INTERCHANGE INTERIM TRAFFIC SIGNAL (RAMP 2)			Project No./Code
No Revisions:	Designer: LCL	Structure Numbers		IM 0254-394
Revised:	Detailer: LCL			16311
Void:	Sheet Subset: TRAFFIC	Subset Sheets: TS-3 of 5		Sheet Number 329

Stan 1:49:28 PM K:\08276\16311\Phase 2\Traffic_ITS\Drawings\16311TRAF_PH2_Signal_Plan2.dgn
9/27/2010 CDOT-PDFDraftQuality_XM.pltcfg CDOT-PenTable.tbl

Know what's below. Call before you dig.

SIGNAL PHASING

NB Santa Fe

SB Santa Fe

Key

PROTECTED MOVEMENT

x PHASE ∅ NUMBER

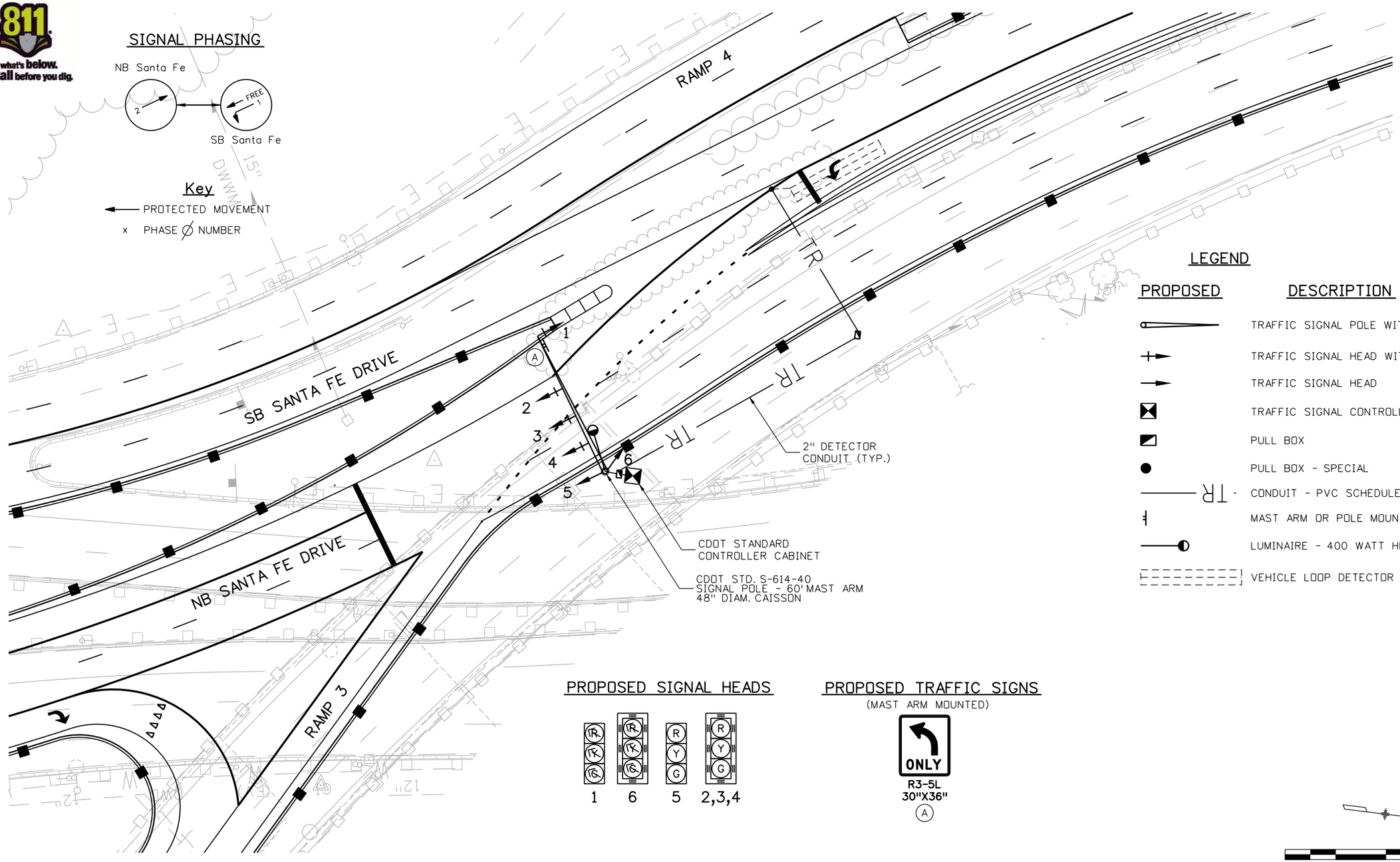

LEGEND

PROPOSED	DESCRIPTION
	TRAFFIC SIGNAL POLE WITH MAST ARM
	TRAFFIC SIGNAL HEAD WITH BACKPLATE
	TRAFFIC SIGNAL HEAD
	TRAFFIC SIGNAL CONTROLLER AND CABINET
	PULL BOX
	PULL BOX - SPECIAL
TR	CONDUIT - PVC SCHEDULE 40
	MAST ARM OR POLE MOUNTED SIGN
	LUMINAIRE - 400 WATT HPS
	VEHICLE LOOP DETECTOR (6' X 40')

PROPOSED SIGNAL HEADS

1 6 5 2,3,4

PROPOSED TRAFFIC SIGNS

(MAST ARM MOUNTED)

R3-5L
30"X36"
(A)

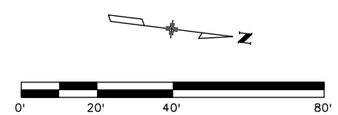

Print Date: 9/27/2010	Sheet Revisions			Colorado Department of Transportation	As Constructed
File Name: 16311TRAF_PH2_Signal_Plan3.dgn	Date:	Comments	Init.	2000 South Holly Street	No Revisions:
Horiz. Scale: 1:40 Vert. Scale: As Noted				Denver, CO 80222	Revised:
Unit Information Unit Leader Initials				Phone: 303-972-9112 FAX: 303-972-9114	Void:
FELSBURG HOLT & ULLEVIG 6300 South Syracuse Way Centennial, CO 80111				Region 6 RLB	

I-25/SANTA FE INTERCHANGE INTERIM TRAFFIC SIGNAL (RAMP 3)				Project No./Code
Designer: LCL	Structure Numbers			IM 0254-394
Detailer: LCL				16311
Sheet Subset: TRAFFIC	Subset Sheets: TS-4 of 5			Sheet Number 330

Stan 1:49:32 PM K:\08276\16311\Phase 2\Traffic_ITS\Drawings\16311TRAF_PH2_Signal_Plan3.dgn
9/27/2010 CDOT-PDFDraftQuality_XM.pltcfg CDOT-PenTable.tbl

Know what's below. Call before you dig.

RESET EXISTING ITS DEVICES
(ATR AND TRAVEL TIME DETECTORS)
MOUNT DEVICES ON NEW LIGHT STANDARD POLE

2-2-INCH CONDUIT

ITS

SB I-25

640+00

REMOVE EXISTING TRAFFIC/ITS POLE

NB I-25

30" DWWM

RESET EXISTING CONTROLLER CABINET

REMOVE EXISTING TRAFFIC/ITS POLE

RESET EXISTING ITS DEVICES
(CCTV CAMERA, ATR DETECTOR AND TRAVEL TIME DETECTOR).
MOUNT DEVICES ON NEW LIGHT STANDARD POLE

SB SANTA FE DRIVE

2-INCH CONDUIT

EXISTING CDOT FIBER VAULT (TO REMAIN)

EXISTING CDOT FIBER BACKBONE (TO REMAIN INTACT)

EXISTING SPAN WIRE TRAFFIC SIGNAL POLE (TO REMAIN IN PLACE)

PLAN NOTES:
1. PAYMENT FOR RESET OF CCTV CAMERA SHALL BE PAID FOR AS RESET TV CAMERAS.
2. PAYMENT FOR RESET OF VEHICLE ATR AND TRAVEL TIME DETECTORS SHALL BE PAID FOR AS RESET TRAFFIC COUNTER (PERMANENT).
3. PAYMENT FOR RESET OF ITS CONTROLLER CABINET SHALL BE PAID FOR AS RESET TRAFFIC SIGNAL CONTROLLER AND CABINET.
4. ALL POWER SOURCE AND CONDUIT CONNECTIONS SHALL BE RE-ESTABLISHED, INCIDENTAL TO THE ITS DEVICE RESETS.

0' 20' 40' 80'

Stan 1:49:37 PM K:\08276\16311\Phase 2\Traffic_ITS\Drawings\16311TRAF_PH2_ITS_Plan1.dgn
9/27/2010 CDOT-PDFDraftQuality_XM.pltcfg CDOT-PenTable.tbl

Print Date: 9/27/2010
File Name: 16311TRAF_PH2_ITS_Plan1.dgn
Horiz. Scale: 1:40 Vert. Scale: As Noted
Unit Information Unit Leader Initials

FELSBURG HOLT & ULLEVIG 6300 South Syracuse Way Centennial, CO 80111

Sheet Revisions		
Date:	Comments	Init.

Colorado Department of Transportation
2000 South Holly Street
Denver, CO 80222
Phone: 303-972-9112 FAX: 303-972-9114
Region 6 RLB

As Constructed
No Revisions:
Revised:
Void:

I-25/SANTA FE INTERCHANGE
ITS PLAN

Designer: LCL
Detailer: LCL
Sheet Subset: TRAFFIC
Structure Numbers
Subset Sheets: TS-5 of 5

Project No./Code
IM 0254-394
16311
Sheet Number 331

Know what's below. Call before you dig.

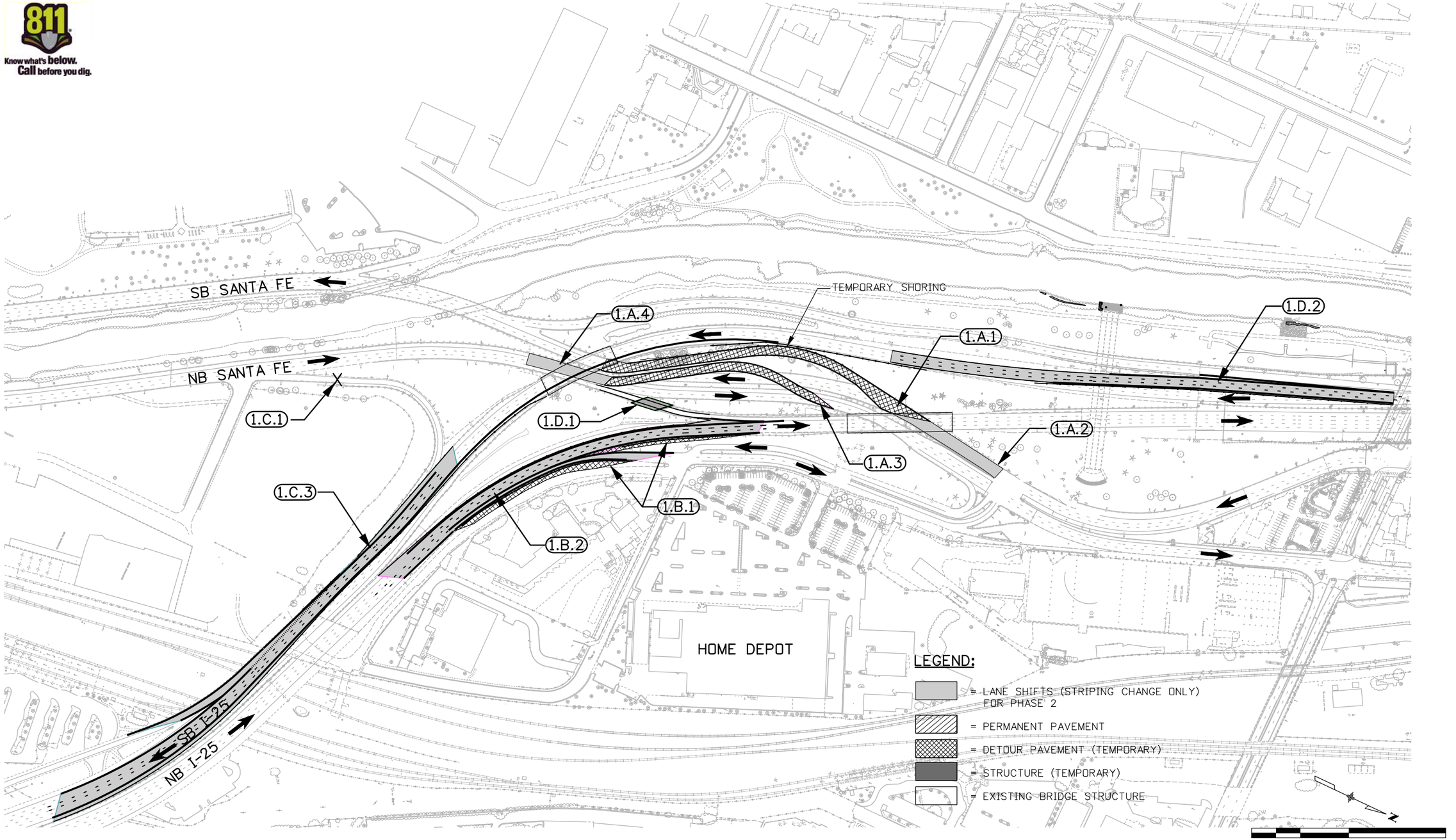

Print Date: 9/24/2010
File Name: 16311TRAF_PH2_ST1_Plan01.dgn
Horiz. Scale: 1:300 Vert. Scale: As Noted
Unit Information Unit Leader Initials

FELSBURG HOLT & ULLEVIG 6300 South Syracuse Way Centennial, CO 80111

Sheet Revisions

Date:	Comments	Init.

Colorado Department of Transportation
DOT DEPARTMENT OF TRANSPORTATION
2000 South Holly Street
Denver, CO 80222
Phone: 303-972-9112 FAX: 303-972-9114
Region 6 RLB

As Constructed
No Revisions:
Revised:
Void:

I-25/SANTA FE INTERCHANGE CONSTRUCTION PHASING PHASE 1

Designer: JSC
Detailer: ZV
Sheet Subset: TRAFFIC
Structure Numbers:
Subset Sheets: ST-01 of XX

Project No./Code
IM 0254-394
16311
Sheet Number 332

Zhanna 8:41:10 AM K:\08276\16311\Phase 2\Traffic_ITS\Drawings\16311TRAF_PH2_ST1_Plan01.dgn
9/24/2010 CDOT-PDFHighQuality_XM.pltcfg CDOT-PenTable.tbl

CONSTRUCTION PHASING NOTES

Pre Construction: Erosion and Sediment Control

Reference	Construction Activity/Sequence	Special Considerations	Construction Traffic Control or Detour Plan	Traffic Operation Impacts
0.A	Initial Erosion Control			
0.A.1.	Install Perimeter control prior to clearing & grubbing. Erosion pre-work inspectionis required per CDOT's Consent Order. See Erosion Control Plans for additional Details			

Phase 1: Prep for NB I-25 Bridge & Partial Ramp 1 Bridge Construction

Reference	Construction Activity/Sequence	Special Considerations	Construction Traffic Control or Detour Plan	Traffic Operation Impacts
1.A	Construct Santa Fe Detours			
1.A.1.1	Close the existing ramp from SB Santa Fe to SB I-25			Eliminates traffic movement for duration of construction.
1.A.1.2	Construct temporary shoring to hold back existing SB I-25 embankment.	Refer to Retaining Wall Plans for this construction.		Impacts to SB Interstate 25 traffic
1.A.1.3	Construct SB Santa Fe detour pavement	Refer to Detour Plan, Profile and Phasing Typical Sections for this construction.		Impacts to SB Santa Fe traffic during construction which ties the detour to the existing lanes of SB Santa Fe
1.A.2	Shift Traffic from Existing SB Santa Fe onto the new detour	Refer to Detour Typical Sections for information.		Impacts SB Santa Fe Traffic
1.A.3.1	Remove existing SB Santa Fe pavement			
1.A.3.2	Construct NB Santa Fe detour pavement	Refer to Detour Plan, Profile and Phasing Typical Sections for this construction.		Impacts to NB Santa Fe Traffic during construction which ties the detour to the existing lanes of NB Santa Fe
1.A.4	Shift traffic from existing NB Santa Fe onto the new detour	Refer to Phasing Typical Sections for information.		Impacts NB Santa Fe Traffic
1A.				
1.B	Adjust NB I-25 Lanes to Accommodate Construction of Ramp 1 Structure			
1.B.1	Add pavement to the outside of existing NB I-25 to accommodate shifted traffic.	Refer to Phasing Typical Sections for this construction.		Impacts to NB I-25 traffic and NB I-25 to Santa Fe Ave Ramp traffic
1. B.2	Shift traffic to East utilizing widened section of I-25.	The new section has reduced lane & shoulder widths. This work also		Impacts to NB I-25 traffic and NB I-25 to Santa Fe
1.C	Lane Shifts to Accommodate Phase 2 Construction			
1.C.1	Close existing NB Santa Fe to SB I-25 Ramp			Eliminates Traffic Movement for duration of construction.
1.C.2	Re-stripe SB I-25 on the North end of the project, shifting traffic to the West to accommodate Phase 2 Cross Over detour construction	Refer to Phasing Typical Sections for information.		Impacts to SB I-25 Traffic
1.C.3	Re-stripe SB I-25 on the South end of the project, shifting traffic to the West to accommodate Phase 2 Cross Over detour construction	Refer to Phasing Typical Sections for information.		Impacts to SB I-25 Traffic
1.D	Temporary Bridge (Ramp from NB Santa Fe to NB I-25)			
1.D.1	Construct temporary structure to carry I-25 traffic over the existing NB Santa Fe to NB I-25 Ramp alignment. Construct 13" Temporary PCC Pavement thru limits of structure.	Refer to Bridge Plans & Phasing Sections for this construction		Impacts to NB Santa Fe To NB I-25 Ramp traffic.

Print Date: 9/24/2010
File Name: 16311TRAF_PH2_Const.Phasing_Notes01.dgn
Horiz. Scale: 1:1 Vert. Scale: As Noted
Unit Information Unit Leader Initials
FELSBURG HOLT & ULLEVIG 6300 South Syracuse Way Centennial, CO 80111

Sheet Revisions

Date:	Comments	Init.

Colorado Department of Transportation
DEPARTMENT OF TRANSPORTATION
2000 South Holly Street
Denver, CO 80222
Phone: 303-972-9112 FAX: 303-972-9114
Region 6 RLB

As Constructed
No Revisions:
Revised:
Void:

I-25/SANTA FE INTERCHANGE
CONSTRUCTION PHASING
NOTES PHASE 1

Designer: JSC
Detailer: ZV
Sheet Subset: TRAFFIC
Structure Numbers
Subset Sheets: ST-02 of X

Project No./Code
IM 0254-394
16311
Sheet Number 333

Zhanna 8:46:04 AM K:\08276\16311\Phase 2\Traffic_ITS\Drawings\16311TRAF_PH2_Const.Phasing_Notes01.dgn
9/24/2010 CDOT-PDFHighQuality_XM.pltcfg CDOT-PenTable.tbl

Know what's below. Call before you dig.

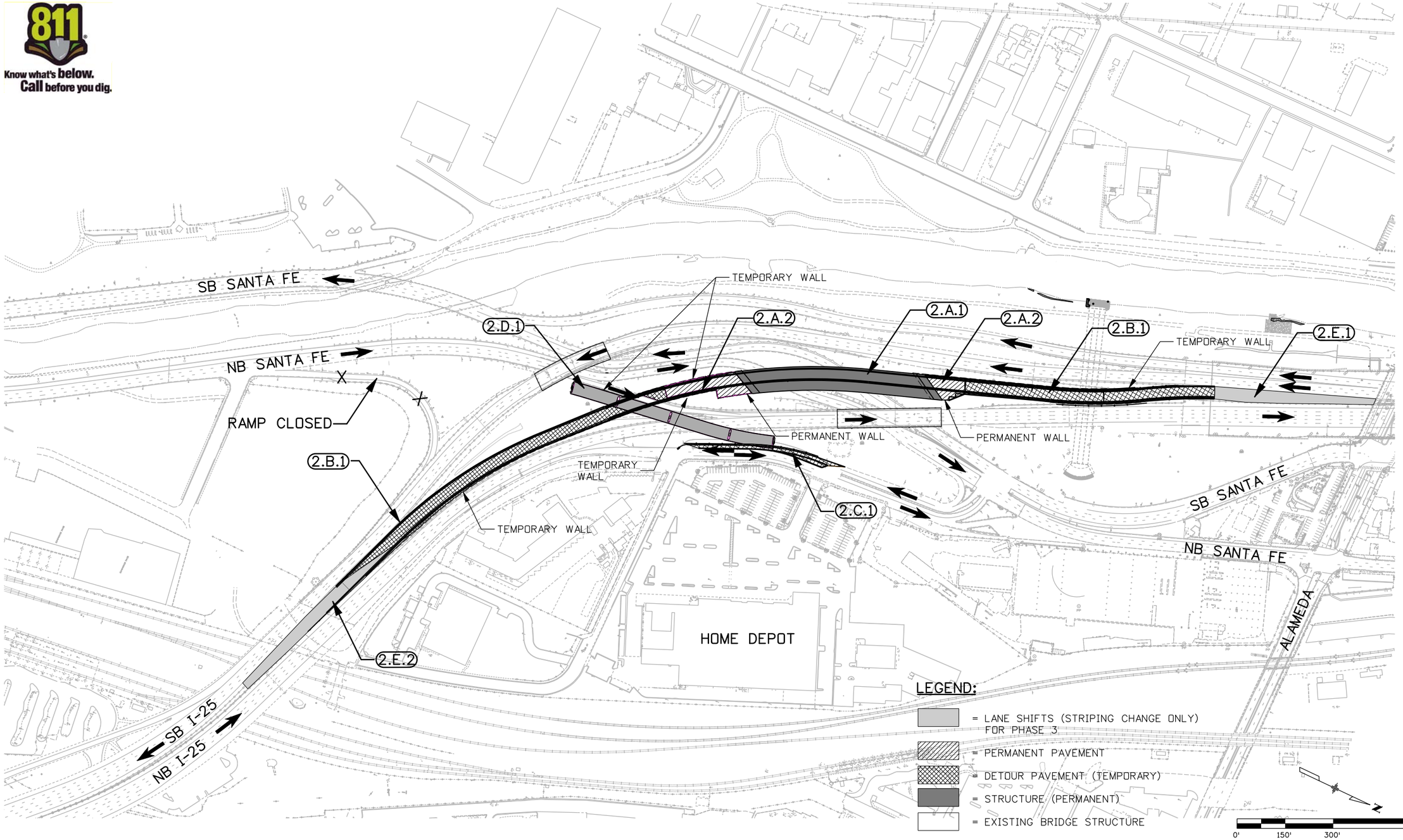

Print Date: 9/24/2010	Sheet Revisions	Colorado Department of Transportation	As Constructed
File Name: 16311TRAF_PH2_ST2_Plan01.dgn	Date: / Comments / Init.	2000 South Holly Street, Denver, CO 80222	No Revisions:
Horiz. Scale: 1:300 Vert. Scale: As Noted		Phone: 303-972-9112 FAX: 303-972-9114	Revised:
Unit Information Unit Leader Initials		Region 6 RLB	Void:
FELSBURG HOLT & ULLEVIG 6300 South Syracuse Way, Centennial, CO 80111			

I-25/SANTA FE INTERCHANGE CONSTRUCTION PHASING PHASE 2			Project No./Code
Designer: JSC	Structure Numbers		IM 0254-394
Detailer: ZV			16311
Sheet Subset: TRAFFIC	Subset Sheets: ST-03 of XX		Sheet Number 334

Zhanna 9:00:06 AM K:\08276\16311\Phase 2\Traffic_ITS\Drawings\16311TRAF_PH2_ST2_Plan01.dgn
9/24/2010 CDOT-PDFHighQuality_XM.pltcfg CDOT-PenTable.tbl

CONSTRUCTION PHASING NOTES

Phase 2: Construct NB I-25 Bridge Structure & Prep for Additional Ramp 1 Bridge Construction

Reference	Construction Activity/Sequence	Special Considerations	Construction Traffic Control or Detour Plan	Traffic Operation Impacts
2.A	Bridge & Permanent Lane Construction			
2.A.1	Construct Entire NB I-25 Over Santa Fe Bridge & Portions of Permanent Retaining Walls	Refer to I-25 Bridge Plans & Retaining Wall Plans for this Construction		
2.A.2.1	Construct Roadway Embankment/Temporary Retaining Walls for Proposed NB I-25 Pavement	Refer to Retaining Wall Plans for this Construction		
2.A.2.2	Construct Portions of Permanent NB I-25 Pavement			
2.B	SB I-25 Cross Over Detours			
2.B.1.1	Construct Roadway Embankment,Temporary Retaining Walls for Cross Over Detour	Refer to Retaining Wall Plans and Detour Typical Sections for this construction.		Some Impact to SB I-25 Traffic
2.B.1.2	Construct temporary pavement for SB I-25 Cross Over Detours.	Refer to Detour Typical Sections for this Construction.		Some Impact to SB I-25 Traffic
2.C	Frontage Road Laneage Shifts	Refer to Detour Typical Sections for information.		Impacts to NB & SB Frontage Road Traffic
2.C.1.1	Shift SB Frontage Road Traffic to East Side of Existing Median Island	Traffic will be head to head. Some adjustment of laneage will be necessary at the Home Depot Access Intersection, as well as the existing intersection of the SB I-25 Exit Ramp and the Frontage Road.		Impacts to NB & SB Frontage Road & SB Exit Ramp Traffic
2.C.1.2	Remove Existing Median Island	Refer to Detour Typical Sections for information.		Impacts to NB & SB Frontage Road & SB Exit Ramp Traffic
2.C1.3	Reconstruct SB Frontage Road Lanes to Accommodate Ramp 1 Construction	Refer to Detour Typical Sections for information.		Impacts to NB & SB Frontage Road & SB Exit Ramp Traffic
2.C.1.4	Shift SB Frontage Road Traffic to newly constructed lanes.	NB Frontage Road Traffic will have two lanes. Some adjustment of laneage will be necessary at the Home Depot Access Intersection, as		Impacts to NB & SB Frontage Road & SB Exit Ramp Traffic
2.D	Construct Portion of Ramp 1 Bridge Structure			
2.D.1	Construct Unit 2 of the Ramp 1 Bridge Structure	Refer to Ramp 1 Bridge Plans for this Construction		
2.E	Lane Shifts to Accommodate Phase 3 Construction			
2.E.1	Re-Stripe SB I-25 on the North End of the Project, shifting SB I-25 traffic to the Cross Over Detour.	Refer to Detour Typical Sections for information.		from the Existing Lanes to the Cross Over Detour.
2.E.2	Re-Stripe SB I-25 on the South End of the Project, shifting SB I-25 traffic to the Cross Over Detour.	Refer to Detour Typical Sections for information.		from the Existing Lanes to the Cross Over Detour.

Zhanna 9:02:00 AM K:\08276\16311\Phase 2\Traffic_ITS\Drawings\16311TRAF_PH2_Const.Phasing_Notes02.dgn
9/24/2010 CDOT-PDFHighQuality_XM.pltcfg CDOT-PenTable.tbl

Print Date: 9/24/2010
File Name: 16311TRAF_PH2_Const.Phasing_Notes02.dgn
Horiz. Scale: 1:1 Vert. Scale: As Noted
Unit Information Unit Leader Initials

FELSBURG HOLT & ULLEVIG 6300 South Syracuse Way Centennial, CO 80111

Sheet Revisions

Date:	Comments	Init.

Colorado Department of Transportation
DEPARTMENT OF TRANSPORTATION
2000 South Holly Street
Denver, CO 80222
Phone: 303-972-9112 FAX: 303-972-9114
Region 6 RLB

As Constructed
No Revisions:
Revised:
Void:

I-25/SANTA FE INTERCHANGE
CONSTRUCTION PHASING
NOTES PHASE 2

Designer: JSC
Detailer: ZV
Sheet Subset: TRAFFIC
Structure Numbers:
Subset Sheets: ST-04 of X

Project No./Code
IM 0254-394
16311
Sheet Number 335

Know what's below. Call before you dig.

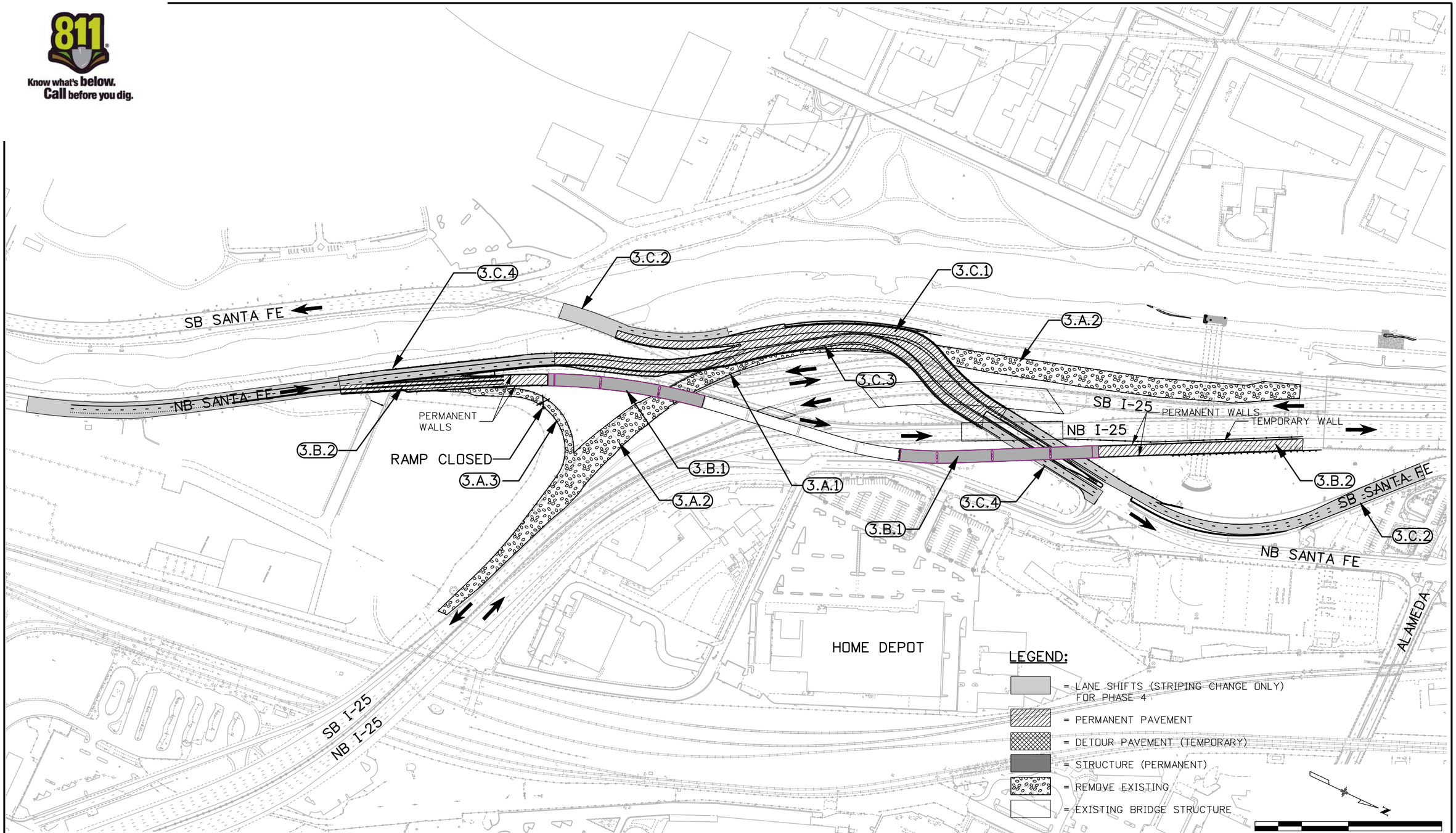

Print Date: 9/24/2010	Sheet Revisions	Colorado Department of Transportation	As Constructed
File Name: 16311TRAF_PH2_ST3_Plan01.dgn	Date: / Comments / Init.	2000 South Holly Street Denver, CO 80222 Phone: 303-972-9112 FAX: 303-972-9114	No Revisions:
Horiz. Scale: 1:300 Vert. Scale: As Noted		Region 6 RLB	Revised:
Unit Information Unit Leader Initials			Void:
FELSBURG HOLT & ULLEVIG 6300 South Syracuse Way Centennial, CO 80111			

I-25/SANTA FE INTERCHANGE CONSTRUCTION PHASING PHASE 3			Project No./Code
Designer: JSC	Structure Numbers		IM 0254-394
Detailer: ZV			16311
Sheet Subset: TRAFFIC	Subset Sheets: ST-05of XX		Sheet Number 336

Zhanna 9:23:25 AM K:\08276\16311\Phase 2\Traffic_ITS\Drawings\16311TRAF_PH2_ST3_Plan01.dgn
9/24/2010 CDOT-PDFHighQuality_XM.pltcfg CDOT-PenTable.tbl

CONSTRUCTION PHASING NOTES

Phase 3: Construct Ramp 1 & Prepare for SB I-25 Construction

Reference	Construction Activity/Sequence	Special Considerations	Construction Traffic Control or Detour Plan	Traffic Operation Impacts
3.A	Demo Existing SB I-25 Thru Project Area			
3.A.1	Remove Existing SB I-25 over Santa Fe Bridge Structure	Refer to Bridge Demolition Plans for Information.		Impact to Traffic on Santa Fe Detours
3.A.2	Remove Existing SB I-25 Pavement Between Broadway Structure and the New I-25 at Alameda Paving			
3.A.3	Remove Existing NB Santa Fe to SB I-25 Ramp			
3.B	Construct Ramp 1			
3.B.1	Construct Remaining Portions of Ramp 1 Bridge	Refer to Ramp 1 Bridge Plans for this Construction.		Impact to Traffic on NB I-25, SB I-25 Detour, Santa Fe Ave and the Frontage Road.
3.B.2	Construct Ramp 1 Roadway Approaches & Associated Retaining Walls, Some Permanent Wall and Some Temporary Wall will be Constructed.	Refer to Roadway Plans and Retaining Wall Plans for this Construction.		Impact to Traffic on NB I-25, Santa Fe Ave and the Frontage Road.
3.C	Construct Santa Fe in its Final Stage 1.3 Configuration			
3.C.1.1	Roadway Grading (excavation) required forConstruction of SB Santa Fe Lanes	Refer to Roadway Plans & Phasing Typical Sections for this Construction. This Phase will require excavation of Existing SB I-25 Embankement		
3.C.1.2	Construct SB Santa Fe Lanes	Refer to Roadway Plans & Phasing Typical Sections for this Construction.		Impacts to SB Santa Fe Traffic during construction which ties the new alignment to the existing lanes of SB Santa Fe
3.C.2	Shift Traffic from SB Santa Fe Detour to Newly Constructed SB Santa Fe	Refer to Roadway Plans & Phasing Typical Sections for this Construction.		Impact to SB Santa Fe Traffic
3.C.3.1	Roadway Grading required for Construction of NB Santa Fe Lanes as well as a portion of the grading required for future construction of Ramp 3.	Refer to Roadway Plans & Phasing Typical Sections for this Construction.		
3.C.3.2	Construct NB Santa Fe Lanes including some additional pavement for a NB Santa Fe Traffic Detour during Phase 4.	Refer to Roadway Plans for Construction of the NB Santa Fe Alignment. Refer to Phasing Plans and Typical Sections for information regarding the additional pavement widths, limits, etc.		Impacts to NB Santa Fe Traffic during construction which ties the new alignment to the existing lanes of NB Santa Fe
3.C.4.1	Shift Traffic from NB Santa Fe Detour to Newly Constructed Lanes	Note that NB Santa Fe pavement is constructed in its final configuration, but the NB Lanes are shifted to avoid construction of the SB I-25 over Santa Fe Bridge Structure. See Detour Plans for striping information.		Impact to NB Santa Fe Traffic
3.C.4.2	Remove NB Santa Fe and SB Santa Fe Detour Pavement constructed in			
3.D	Ramp 1			
3.D.1	Close existing NB Santa Fe to NB I-25 Ramp & switch traffic to new Ramp 1 Alignment.			

Zhanna 9:31:02 AM K:\08276\16311\Phase 2\Traffic_ITS\Drawings\16311TRAF_PH2_Const.Phasing_Notes03.dgn
9/24/2010 CDOT-PDFHighQuality_XM.pltcfg CDOT-PenTable.tbl

Print Date: 9/24/2010
File Name: 16311TRAF_PH2_Const.Phasing_Notes03.dgn
Horiz. Scale: 1:1 Vert. Scale: As Noted
Unit Information Unit Leader Initials

FELSBURG HOLT & ULLEVIG 6300 South Syracuse Way Centennial, CO 80111

Sheet Revisions

Date:	Comments	Init.

Colorado Department of Transportation
2000 South Holly Street
Denver, CO 80222
Phone: 303-972-9112 FAX: 303-972-9114
Region 6 RLB

As Constructed
No Revisions:
Revised:
Void:

I-25/SANTA FE INTERCHANGE
CONSTRUCTION PHASING
NOTES PHASE 3

Designer: JSC
Detailer: ZV
Sheet Subset: TRAFFIC
Structure Numbers:
Subset Sheets: ST-06 of X

Project No./Code
IM 0254-394
16311
Sheet Number 337

Know what's below. Call before you dig.

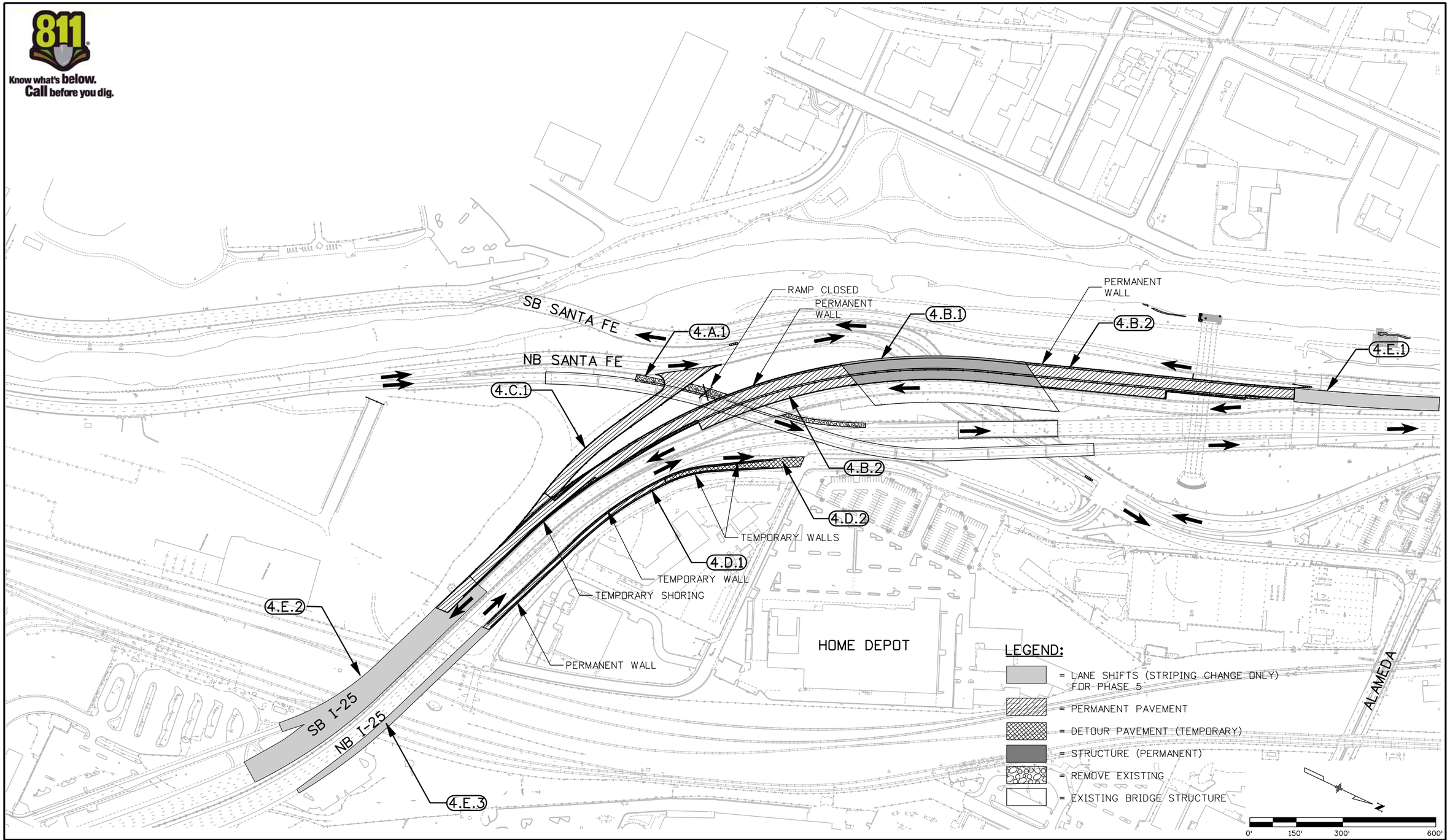

Print Date: 9/24/2010	Sheet Revisions	Colorado Department of Transportation	As Constructed
File Name: 16311TRAF_PH2_ST4_Plan01.dgn	Date: / Comments / Init.	2000 South Holly Street, Denver, CO 80222	No Revisions:
Horiz. Scale: 1:300 Vert. Scale: As Noted		Phone: 303-972-9112 FAX: 303-972-9114	Revised:
Unit Information Unit Leader Initials		Region 6 RLB	Void:
FELSBURG HOLT & ULLEVIG 6300 South Syracuse Way, Centennial, CO 80111			

I-25/SANTA FE INTERCHANGE CONSTRUCTION PHASING PHASE 4			Project No./Code
			IM 0254-394
Designer: JSC	Structure Numbers		16311
Detailer: ZV			
Sheet Subset: TRAFFIC	Subset Sheets: ST-07of XX		Sheet Number 338

Zhanna 9:42:13 AM K:\08276\16311\Phase 2\Traffic_ITS\Drawings\16311TRAF_PH2_ST4_Plan01.dgn
9/24/2010 CDOT-PDFHighQuality_XM.pltcfg CDOT-PenTable.tbl

CONSTRUCTION PHASING NOTES

Phase 4: Construct Ramp 3, Portions of SB I-25 & Prep for NB I-25 Construction

Reference	Construction Activity/Sequence	Special Considerations	Construction Traffic Control or Detour Plan	Traffic Operation Impacts
4.A	NB Santa Fe to NB I-25 Ramp (Original)			
4.A.1	Remove Original Ramp			
4.B	Construct Portions of SB I-25			
4.B.1	Construct SB I-25 Bridge Structure & Associated Retaining Walls	See I-25 Bridge Plans & Retaining Wall Plans for this Construction.		Impact to Santa Fe Ave Traffic
4.B.2.1	Roadway Grading required for Construction of SB I-25, and Ramp 3. Construct Permanent Retaining Walls & Temporary Shoring for Proposed SB I-25 Pavement.	See Roadway Plans, Retaining Wall Plans, Detour Plans & Phasing Typical Sections for this Construction.		
4.B.2.2	Construct Portions of Permanent SB I-25 Pavement	See Roadway Plans Detour Plans & Phasing Typical Sections for this Construction.		
4.C	Construct Ramp 3			
4.C.1	Final Grading & Construction of Ramp 3 Pavement	See Roadway Plans for this Construction.		
4.D	Construct Ramp 2 Detour			
4.D.1.1	Roadway Grading, Construct Portions of Permanent Retaining Walls, & Construct Temporary Retaining Walls for Ramp 2	See Roadway Plans, Profiles, Roadway Typical Sections, Phasing Typical Sections & Retaining Wall Plans for this Construction. Application of Panel Facing to Temporary Retaining Walls may require overnight closure of existing exit ramp.		Impact to NB I-25 & NB I-25 to Santa Fe Ave Ramp Traffic & Frontage Road Traffic
4.D.1.2	Construct Permanent Pavment on top of Final Ramp 2 Grading	See Phasing Typical Sections for this Construction.		Impact to NB I-25 & NB I-25 to Santa Fe Ave Ramp Traffic
4.D.2.1	Roadway Grading, Construct Temporary Retaining Walls for Ramp 2 Detour	See Detour Plans, Profiles, Phasing Typical Sections & Retaining Wall Plans for this Construction. Application of Panel Facing to Temporary Retaining Walls may require overnight closure of existing exit ramp.		Impact to NB I-25 & NB I-25 to Santa Fe Ave Ramp Traffic & Frontage Road Traffic
4.D.2.2	Construct Temporary Detour Pavment on top of Ramp 2 Detour Grading	See Phasing Typical Sections for this Construction.		Impact to NB I-25 & NB I-25 to Santa Fe Ave Ramp Traffic
4.E	Lane Shifts to Move SB I-25 Traffic and Accommodate Phase 5 Construction			
4.E.1	Re-Stripe SB I-25 on the North End of the Project, shifting SB I-25 traffic to the Newly Constructed Lanes	Refer to Phasing Typical Sections for information.		Impact to SB I-25 Traffic
4.E.2	Re-Stripe SB I-25 on the South End of the Project, shifting SB I-25 traffic to the Newly Constructed Lanes.	Refer to Phasing Typical Sections for information.		Impact to SB I-25 Traffic
4.E.3	Re-Stripe NB I-25/Ramp 2 on the South End of the Project, shifting Ramp 2 traffic to the Temporary Ramp Detour.	Refer to Phasing Typical Sections for information.		Impact to NB I-25 & NB I-25 to Santa Fe Ave Ramp Traffic

Zhanna 9:45:01 AM K:\08276\16311\Phase 2\Traffic_ITS\Drawings\16311TRAF_PH2_Const.Phasing_Notes04.dgn
9/24/2010 CDOT-PDFHighQuality_XM.pltcfg CDOT-PenTable.tbl

Print Date: 9/24/2010
File Name: 16311TRAF_PH2_Const.Phasing_Notes04.dgn
Horiz. Scale: 1:1 Vert. Scale: As Noted
Unit Information Unit Leader Initials

FELSBURG HOLT & ULLEVIG 6300 South Syracuse Way Centennial, CO 80111

Sheet Revisions

Date:	Comments	Init.

Colorado Department of Transportation
DEPARTMENT OF TRANSPORTATION
2000 South Holly Street
Denver, CO 80222
Phone: 303-972-9112 FAX: 303-972-9114
Region 6 RLB

As Constructed
No Revisions:
Revised:
Void:

I-25/SANTA FE INTERCHANGE
CONSTRUCTION PHASING
NOTES PHASE 4

Designer: JSC
Detailer: ZV
Sheet Subset: TRAFFIC
Structure Numbers:
Subset Sheets: ST-08 of X

Project No./Code
IM 0254-394
16311
Sheet Number 339

Know what's **below.**
Call before you dig.

SB SANTA FE

NB SANTA FE

5.A.1

5.C.1

5.D.1

5.B.2

TEMPORARY SHORING

5.B.1

TEMPORARY WALL

HOME DEPOT

ALAMEDA

SB I-25

NB I-25

5.D.2

LEGEND:

= LANE SHIFTS (STRIPING CHANGE ONLY) FOR PHASE 6 & 7

= PERMANENT PAVEMENT

= DETOUR PAVEMENT (TEMPORARY)

= REMOVE EXISTING

= EXISTING BRIDGE STRUCTURE

0' 150' 300' 600'

Print Date: 9/24/2010
File Name: 16311TRAF_PH2_ST5_Plan01.dgn
Horiz. Scale: 1:300 Vert. Scale: As Noted
Unit Information Unit Leader Initials

FELSBURG HOLT & ULLEVIG 6300 South Syracuse Way Centennial, CO 80111

Sheet Revisions		
Date:	Comments	Init.

Colorado Department of Transportation
DEPARTMENT OF TRANSPORTATION
2000 South Holly Street
Denver, CO 80222
Phone: 303-972-9112 FAX: 303-972-9114
Region 6 RLB

As Constructed
No Revisions:
Revised:
Void:

I-25/SANTA FE INTERCHANGE CONSTRUCTION PHASING PHASE 5

Designer: JSC
Detailer: ZV
Sheet Subset: TRAFFIC
Structure Numbers:
Subset Sheets: ST-09of XX

Project No./Code
IM 0254-394
16311
Sheet Number 340

Zhanna 9:49:24 AM K:\08276\16311\Phase 2\Traffic_ITS\Drawings\16311TRAF_PH2_ST5_Plan01.dgn
9/24/2010 CDOT-PDFHighQuality_XM.pltcfg CDOT-PenTable.tbl

CONSTRUCTION PHASING NOTES

Phase 5: **Constuct Portions of NB & SB I-25**

Reference	Construction Activity/Sequence	Special Considerations	Construction Traffic Control or Detour Plan	Traffic Operation Impacts
5.A	Remove Temporary Structure			
5.A.1	Remove Temporary Structure Used to Convey NB Santa Fe to NB I-25 Ramp Traffic in Previous Phases. Complete NB I-25 Grading, and Pave with HMA (Temporary Pavement)	See Structure Demolition Plans. Phasing Sections for this Construction		
5.B	Construct Portions of NB I-25 Lanes			
5.B.1	Construct Temporary Cross Over Including portions of temporary Wall South of the Bridge Structures	See Detour Plans, Phasing Sections & Retaining Wall Plans for this Construction.		Impact to NB I-25 Traffic
5.B.2	Construct Portions of NB I-25 Lanes between the proposed NB I-25 Bridge Structure to the Northern Project Limit	See Roadway Plans and Phasing Sections for this Construction.		
5.C	Construct Portions of SB I-25 Lanes			
5.C.1	Construct Remaining Portions of SB I-25 Lanes between the proposed SB I-25 Bridge Structure to the Northern Project Limit	See Roadway Plans and Phasing Sections for this Construction.		
5.D	Lane Shifts to Move NB I-25 Traffic and Accommodate Phases 6 & 7			
5.D.1	Re-Stripe NB I-25 on the North End of the Project, shifting NB I-25 traffic onto the Newly Constructed NB I-25 Lanes	Refer to Phasing Sections for information.		Impact to NB I-25 Traffic
5.D.2	Re-Stripe NB I-25 on the Soiuth End of the Project, shifting NB I-25 traffic onto the Cross Over.	Refer to Phasing Sections for information.		Impact to NB I-25 Traffic

Zhanna 9:51:22 AM K:\08276\16311\Phase 2\Traffic_ITS\Drawings\16311TRAF_PH2_Const.Phasing_Notes05.dgn
9/24/2010 CDOT-PDFHighQuality_XM.pltcfg CDOT-PenTable.tbl

Print Date: 9/24/2010
File Name: 16311TRAF_PH2_Const.Phasing_Notes05.dgn
Horiz. Scale: 1:1 Vert. Scale: As Noted
Unit Information Unit Leader Initials

FELSBURG HOLT & ULLEVIG 6300 South Syracuse Way Centennial, CO 80111

Sheet Revisions

Date:	Comments	Init.

Colorado Department of Transportation
DOT DEPARTMENT OF TRANSPORTATION
2000 South Holly Street
Denver, CO 80222
Phone: 303-972-9112 FAX: 303-972-9114
Region 6 RLB

As Constructed
No Revisions:
Revised:
Void:

I-25/SANTA FE INTERCHANGE
CONSTRUCTION PHASING
NOTES PHASE 5

Designer: JSC
Detailer: ZV
Sheet Subset: TRAFFIC
Structure Numbers
Subset Sheets: ST-10 of X

Project No./Code
IM 0254-394
16311
Sheet Number 341

811
Know what's **below.**
Call before you dig.

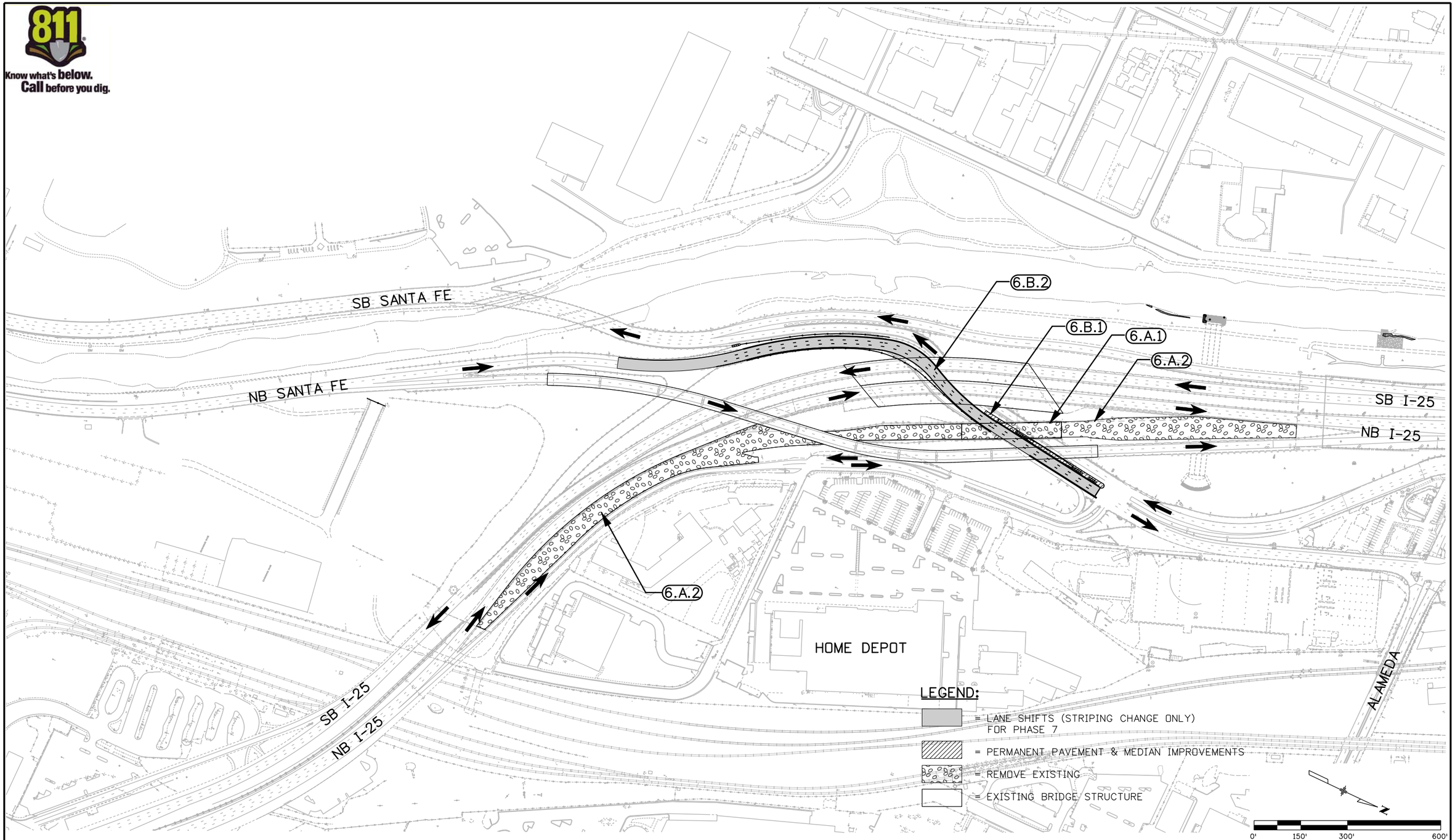

Print Date: 9/24/2010	Sheet Revisions		
File Name: 16311TRAF_PH2_ST6_Plan01.dgn	Date:	Comments	Init.
Horiz. Scale: 1:300 Vert. Scale: As Noted			
Unit Information Unit Leader Initials			
FELSBURG HOLT & ULLEVIG 6300 South Syracuse Way Centennial, CO 80111			

Colorado Department of Transportation
CDOT DEPARTMENT OF TRANSPORTATION
2000 South Holly Street
Denver, CO 80222
Phone: 303-972-9112 FAX: 303-972-9114
Region 6 RLB

As Constructed
No Revisions:
Revised:
Void:

I-25/SANTA FE INTERCHANGE CONSTRUCTION PHASING PHASE 6

Designer:	JSC	Structure Numbers	
Detailer:	ZV		
Sheet Subset:	TRAFFIC	Subset Sheets:	ST-11 of XX

Project No./Code
IM 0254-394
16311
Sheet Number 342

Zhanna 9:53:16 AM K:\08276\16311\Phase 2\Traffic_ITS\Drawings\16311TRAF_PH2_ST6_Plan01.dgn
9/24/2010 CDOT-PDFHighQuality_XM.pltcfg CDOT-PenTable.tbl

CONSTRUCTION PHASING NOTES

Phase 6: Removal of Existing NB I-25 & Final Santa Fe Construction

Reference	Construction Activity/Sequence	Special Considerations	Construction Traffic Control or Detour Plan	Traffic Operation Impacts
6.A	Removal of Existing NB I-25 Facilities			
6.A.1	Remove Existing NB I-25 over Santa Fe Bridge Structure	See Structure Demolition Plans for this Construction		Impact to Santa Fe Ave. Traffic
6.A.2	Remove Existing NB I-25 Pavement within the Project Limits			
6.B	Complete Santa Fe Construction			
6.B.1	Barrier Around the Ramp 1 Bridge Pier Located Within the Median of Santa Fe Ave.	See Roadway Plans and Phasing Sections for this Construction.		
6.B.2	Re-Stripe NB Santa Fe so that Traffic Operating in its Ultimate Configuration SB Santa Fe Traffic will Still be Operating with a 2-Lane Section.	Refer to Signing and Striping Plans for this Construction		Impact to NB I-25 Traffic

Zhanna 10:09:27 AM K:\08276\16311\Phase 2\Traffic_ITS\Drawings\16311TRAF_PH2_Const.Phasing_Notes06.dgn
9/24/2010 CDOT-PDFHighQuality_XM.pltcfg CDOT-PenTable.tbl

Print Date: 9/24/2010
File Name: 16311TRAF_PH2_Const.Phasing_Notes06.dgn
Horiz. Scale: 1:1 Vert. Scale: As Noted
Unit Information Unit Leader Initials

FELSBURG HOLT & ULLEVIG 6300 South Syracuse Way Centennial, CO 80111

Sheet Revisions		
Date:	Comments	Init.

Colorado Department of Transportation
2000 South Holly Street
Denver, CO 80222
Phone: 303-972-9112 FAX: 303-972-9114
Region 6 RLB

As Constructed
No Revisions:
Revised:
Void:

I-25/SANTA FE INTERCHANGE
CONSTRUCTION PHASING
NOTES PHASE 6

Designer: JSC
Detailer: ZV
Sheet Subset: TRAFFIC
Structure Numbers
Subset Sheets: ST-12 of X

Project No./Code
IM 0254-394
16311
Sheet Number 343

Know what's **below.**
Call before you dig.

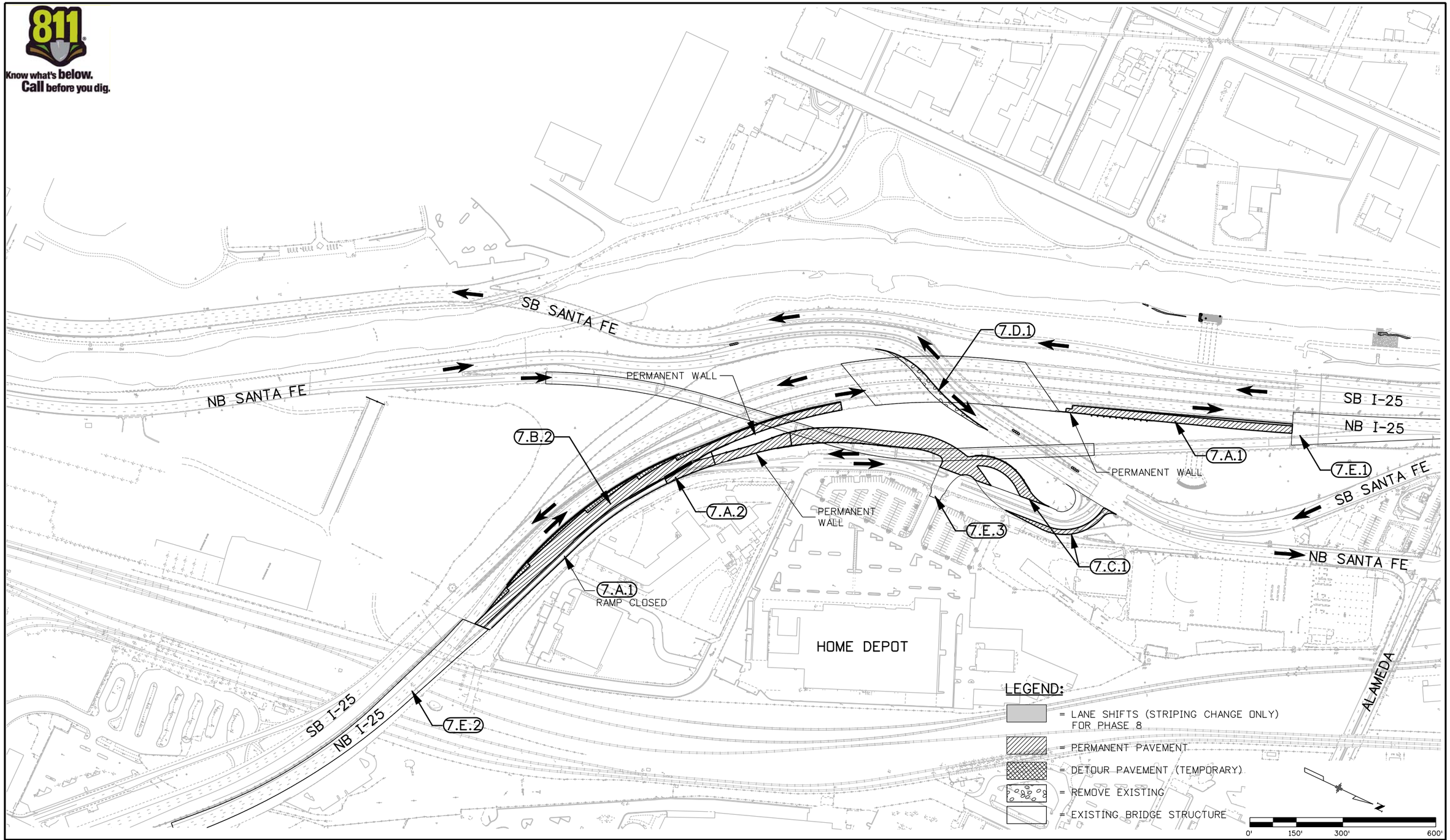

Print Date: 9/24/2010
File Name: 16311TRAF_PH2_ST7_Plan01.dgn
Horiz. Scale: 1:300 Vert. Scale: As Noted
Unit Information Unit Leader Initials

FELSBURG HOLT & ULLEVIG 6300 South Syracuse Way Centennial, CO 80111

Sheet Revisions		
Date:	Comments	Init.

Colorado Department of Transportation
DOT DEPARTMENT OF TRANSPORTATION
2000 South Holly Street
Denver, CO 80222
Phone: 303-972-9112 FAX: 303-972-9114
Region 6 RLB

As Constructed
No Revisions:
Revised:
Void:

I-25/SANTA FE INTERCHANGE
CONSTRUCTION PHASING
PHASE 7

Designer: JSC
Detailer: ZV
Sheet Subset: TRAFFIC
Structure Numbers:
Subset Sheets: ST-13 of XX

Project No./Code
IM 0254-394
16311
Sheet Number 344

Zhanna 10:05:12 AM K:\08276\16311\Phase 2\Traffic_ITS\Drawings\16311TRAF_PH2_ST7_Plan01.dgn
9/24/2010 CDOT-PDFHighQuality_XM.pltcfg CDOT-PenTable.tbl

CONSTRUCTION PHASING NOTES

Phase 7: NB I-25, Ramp 2 & Home Depot Access Construction

Reference	Construction Activity/Sequence	Special Considerations	Construction Traffic Control or Detour Plan	Traffic Operation Impacts
7.A	Ramp 2 Construction			
7.A.1	Close NB I-25 to NB Santa Fe Ramp Movement for Duration of Phase 7	Traffic Must be Detoured		NB I-25 to Santa Fe Ramp Traffic
7.A.2.1	Roadway Grading & Permanent Retaining Wall Construction for Final Ramp 2 Alignment	See Roadway Plans, Retaining Wall Plans and Phasing Sections for this Construction.		NB I-25 to Santa Fe Ramp Traffic
7.A.2.2	Final Paving Along Proposed Ramp 2 Alignment. Some Concrete Pavement and	See Roadway Plans, Retaining Wall Plans and Phasing Sections for		NB I-25 to Santa Fe Ramp Traffic
7.B	NB I-25 Construction			
7.B.1	Construct Remaining NB I-25 Lanes between the Bridge Structure and the North Project Limit, Including Extension of Proposed Retaining Walls	See Roadway Plans, Retaining Wall Plans and Phasing Sections for this Construction.		Some Impact to NB I-25 Traffic
7.B.2	Project Limit, Including Extension of Proposed Retaining Walls. This Construction will Require Both Permanent and Temporary Paving	of the Permanent Pavement Sections. See Roadway Plans, Retaining Wall Plans and Phasing Sections for this Construction.		Some Impact to NB I-25 Traffic
7.C	Home Depot Access & Frontage Road Construction			
7.C.1	Construct Portions of Frontage Road & Home Depot Access Improvements Located Outside of the Existing Pavement Limits.	See Roadway Plans and Typical Sections for this Construction		Some Impact to Frontage Road & Home Depot Access Traffic
7.D	NB Santa Fe Avenue Construction			
7.D.1	Remove outside edge of NB Santa Fe Ave and place Guardrail in its Ultimate Configuration.	See Roadway Plans & Phasing Sections for this Construction.		Some Impact to NB Santa Fe Ave Traffic
7.E	Lane Shifts to Accommodate Phase 8 Construction			
7.E.1	Re-Stripe NB I-25 North of the Structures, so that Traffic is Operating in the Outside Portion of the Permanent Pavement.	Refer to Phasing Sections for this Construction		Impact to NB I-25 Traffic
7.E.2	Re-Stripe NB I-25 Sorth of the Structures, so that Traffic is Operating in the Outside Portion of the Permanent Pavement.	Refer to Phasing Sections for this Construction		Impact to NB I-25 Traffic
7.E.3	Re-Stripe Ramp 2, Home Depot Access and Frontage Road so that Traffic is Operating in its Ultimate Configuration	Refer to Signing and Striping Plans for this Construction		Impact to Ramp 2, Frontage Road, & Home Depot Access Traffic

Zhanna 10:07:34 AM K:\08276\16311\Phase 2\Traffic_ITS\Drawings\16311TRAF_PH2_Const.Phasing_Notes07.dgn
9/24/2010 CDOT-PDFHighQuality_XM.pltcfg CDOT-PenTable.tbl

Print Date: 9/24/2010
File Name: 16311TRAF_PH2_Const.Phasing_Notes07.dgn
Horiz. Scale: 1:1 Vert. Scale: As Noted
Unit Information Unit Leader Initials
FELSBURG HOLT & ULLEVIG 6300 South Syracuse Way Centennial, CO 80111

Sheet Revisions

Date:	Comments	Init.

Colorado Department of Transportation
DOT DEPARTMENT OF TRANSPORTATION
2000 South Holly Street
Denver, CO 80222
Phone: 303-972-9112 FAX: 303-972-9114
Region 6 RLB

As Constructed
No Revisions:
Revised:
Void:

I-25/SANTA FE INTERCHANGE
CONSTRUCTION PHASING
NOTES PHASE 7

Designer: JSC
Detailer: ZV
Sheet Subset: TRAFFIC
Structure Numbers:
Subset Sheets: ST-14 of X

Project No./Code
IM 0254-394
16311
Sheet Number 345

Know what's **below.**
Call before you dig.

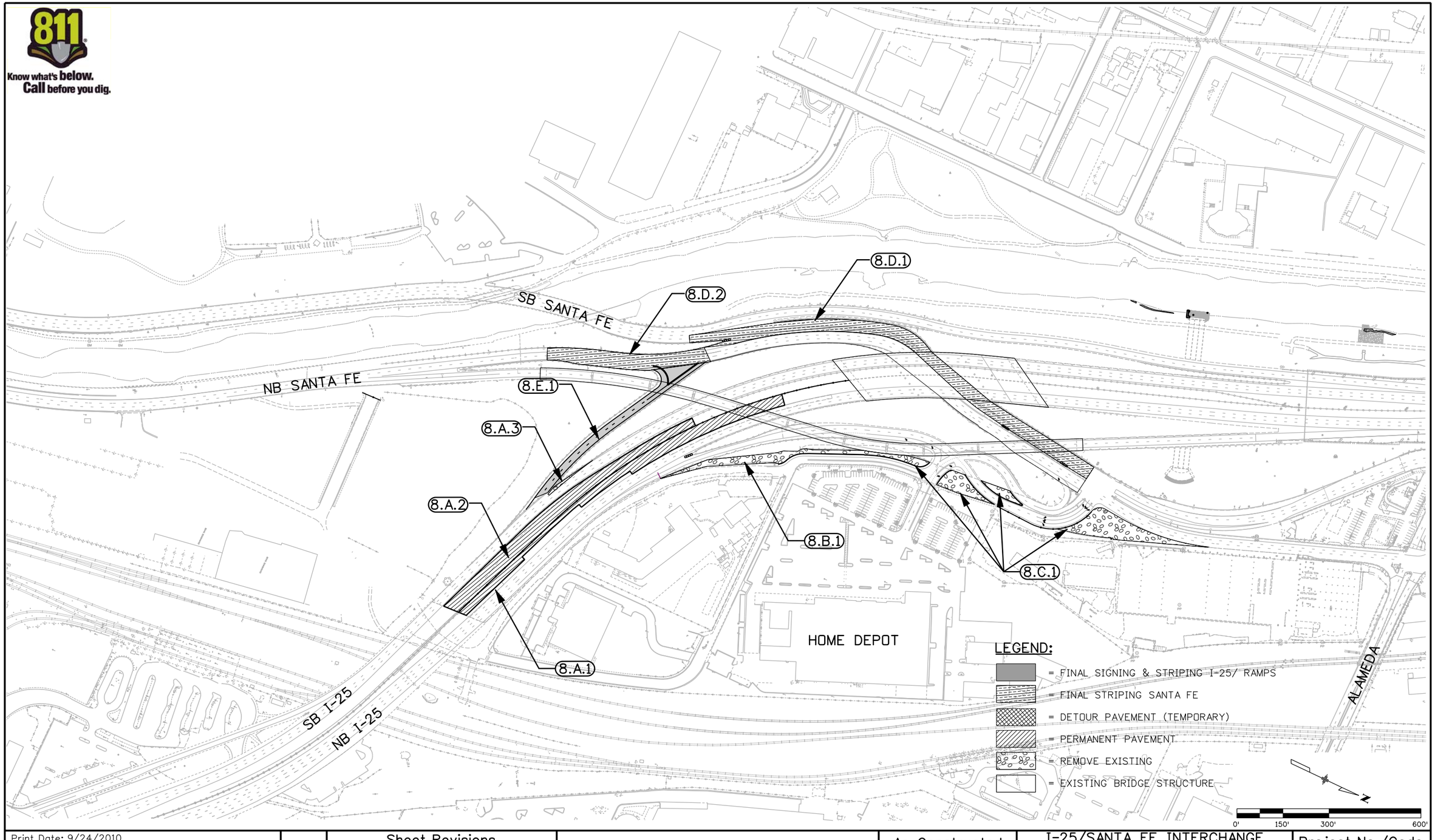

Print Date: 9/24/2010	Sheet Revisions	Colorado Department of Transportation	As Constructed
File Name: 16311TRAF_PH2_ST8_Plan01.dgn	Date: / Comments / Init.	2000 South Holly Street, Denver, CO 80222	No Revisions:
Horiz. Scale: 1:300 Vert. Scale: As Noted		Phone: 303-972-9112 FAX: 303-972-9114	Revised:
Unit Information Unit Leader Initials		Region 6 RLB	Void:
FELSBURG HOLT & ULLEVIG 6300 South Syracuse Way, Centennial, CO 80111			

I-25/SANTA FE INTERCHANGE CONSTRUCTION PHASING PHASE 8			Project No./Code
Designer: JSC	Structure Numbers		IM 0254-394
Detailer: ZV			16311
Sheet Subset: TRAFFIC	Subset Sheets: ST-15 of XX		Sheet Number 346

Zhanna 10:12:40 AM K:\08276\16311\Phase 2\Traffic_ITS\Drawings\16311TRAF_PH2_ST8_Plan01.dgn
9/24/2010 CDOT-PDFHighQuality_XM.pltcfg CDOT-PenTable.tbl

CONSTRUCTION PHASING NOTES

Phase 8: **NB I-25, SB I-25, Ramp 2 & Home Depot Access Construction**

Reference	Construction Activity/Sequence	Special Considerations	Construction Traffic Control or Detour Plan	Traffic Operation Impacts
8.A	NB I-25 & SB I-25 Construction			
8.A.1	Construct Remaining NB I-25 Lanes between the Bridge Structure and the South Project Limit	See Roadway Plans and Phasing Sections for this Construction.		Impacts to NB I-25 Traffic
8.A.2	Construct Remaining SB I-25 Lanes between the Bridge Structure and the South Project Limit	See Roadway Plans and Phasing Sections for this Construction.		Impacts to SB I-25 Traffic
8.A.3	Remove Temporary Pavement from the Outside of SB I-25 Near the Ramp 3 Gore.	See Phasing Details for Information		Impacts to SB I-25 Traffic
8.B	Demo Ramp 2 Detour			
8.B.1	Remove Ramp 2 Detour	See Phasing Plans & Sections for Information		Some Impact to Ramp 2 & Frontage Road Traffic
8.C	Home Depot Access & Frontage Road Construction			
8.C.1	Remove Portions of existing Frontage Road Pavement to Complete Home Depot and Frontage Road Improvements.	See Roadway Plans & Phasing Details for this Construction		Some Impact to Frontage Road & Home Depot Access Traffic
8.D	Final Santa Fe Striping			
8.D.1	Stripe SB Santa Fe to Show Final Lane Configureation, Including turn lanes for Traffic Accessing Ramp 3	Refer to Signing and Striping Plans for this Construction		Some Impact to SB Santa Fe Traffic
8.D.1	Stripe NB Santa Fe to Show Final Lane Configureation, Including turn lanes for Traffic Accessing Ramp 3	Refer to Signing and Striping Plans for this Construction		Some Impact to NB Santa Fe Traffic
8.E	Ramp 3			
8.E.1.1	Final Striping on Ramp 3 & Adjust Striping on SB I-25 to accept Ramp 3 Traffic	Refer to Signing and Striping Plans for this Construction		
8E.1.2	Open Ramp 3 to Traffic			

Print Date: 9/24/2010
File Name: 16311TRAF_PH2_Const.Phasing_Notes08.dgn
Horiz. Scale: 1:1 Vert. Scale: As Noted
Unit Information Unit Leader Initials

FELSBURG HOLT & ULLEVIG 6300 South Syracuse Way Centennial, CO 80111

Sheet Revisions

Date:	Comments	Init.

Colorado Department of Transportation
DEPARTMENT OF TRANSPORTATION
2000 South Holly Street
Denver, CO 80222
Phone: 303-972-9112 FAX: 303-972-9114
Region 6 RLB

As Constructed
No Revisions:
Revised:
Void:

I-25/SANTA FE INTERCHANGE
CONSTRUCTION PHASING
NOTES PHASE 8

Designer: JSC
Detailer: ZV
Sheet Subset: TRAFFIC
Structure Numbers:
Subset Sheets: ST-16 of X

Project No./Code
IM 0254-394
16311
Sheet Number 347

Zhanna 10:14:31 AM K:\08276\16311\Phase 2\Traffic_ITS\Drawings\16311TRAF_PH2_Const.Phasing_Notes08.dgn
9/24/2010 CDOT-PDFHighQuality_XM.pltcfg CDOT-PenTable.tbl

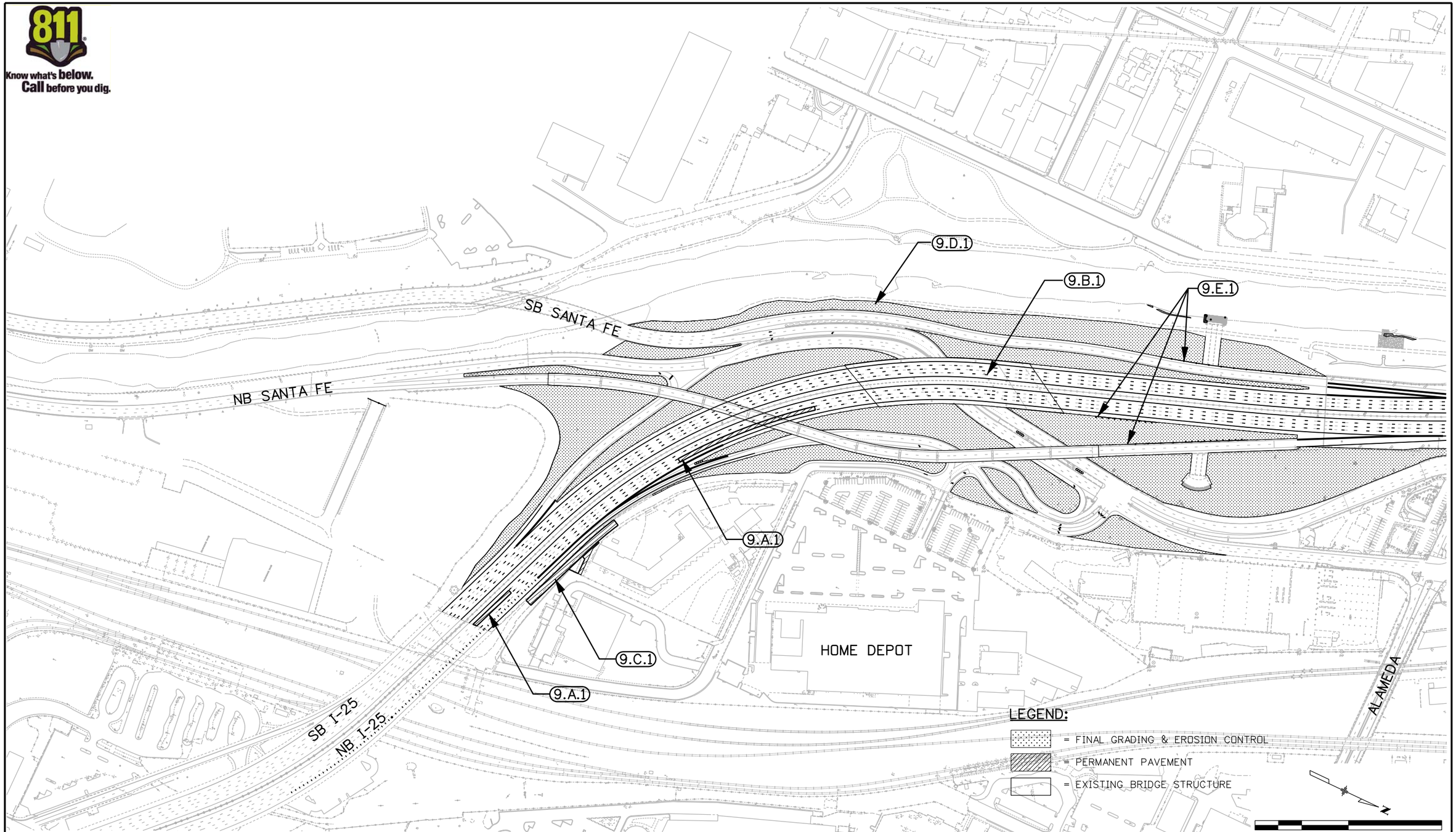

Zhanna 10:18:06 AM K:\08276\16311\Phase 2\Traffic_ITS\Drawings\16311TRAF_PH2_ST9_Plan01.dgn
9/24/2010 CDOT-PDFHighQuality_XM.pltcfg CDOT-PenTable.tbl

Print Date: 9/24/2010			
File Name: 16311TRAF_PH2_ST9_Plan01.dgn			
Horiz. Scale: 1:300	Vert. Scale: As Noted		
Unit Information	Unit Leader Initials		
FELSBURG HOLT & ULLEVIG 6300 South Syracuse Way Centennial, CO 80111			

Sheet Revisions

Date:	Comments	Init.

Colorado Department of Transportation
DOT DEPARTMENT OF TRANSPORTATION
2000 South Holly Street
Denver, CO 80222
Phone: 303-972-9112 FAX: 303-972-9114
Region 6 RLB

As Constructed	
No Revisions:	
Revised:	
Void:	

I-25/SANTA FE INTERCHANGE
CONSTRUCTION PHASING
PHASE 9

Designer:	JSC	Structure Numbers	
Detailer:	ZV		
Sheet Subset:	TRAFFIC	Subset Sheets:	ST-17 of XX

Project No./Code
IM 0254-394
16311
Sheet Number 348

CONSTRUCTION PHASING NOTES

Phase 9: Final Paving, Frontage Road Improvements, Final Grading & Erosion Control

Reference	Construction Activity/Sequence	Special Considerations	Construction Traffic Control or Detour Plan	Traffic Operation Impacts
9.A	NB I-25 Final Paving			
9.A.1	Construct Final Pockets of Permanent Paving in NB I-25	Lane Closures & Traffic Shifts will be necessary for this Construction. See Roadway Plans and Typical Sections for this Construction.		Impacts to NB I-25 Traffic.
9.B	Final Striping			
9.B.1	Final Striping for I-25 and Associated Ramps, As Necessary	Lane Closures will be necessary for this Construction. See Roadway Plans and Typical Sections for this Construction.		Impacts to I-25 Traffic.
9.C	Frontage Road Improvements			
9.C.1	Construct Frontage Road Improvements Adjacent to I-25 Retaining Wall	See Roadway Plans & Tupical Sections for this Cosntruction		Impact to Frontage Road Traffic
9.D	Final Grading & Erosion Control			
9.D.1	Final Grade & Install Final Erosion Control to All Disturbed Areas.	See Roadway Grading Plans & Final Erosion Control Plans for this Construction		
9.E	Final Guardrail Installation			
9.E.1	Install Any Remaining Guardrail As Necessary	See Roadway Plans & Tupical Sections for this Cosntruction		Some Impact to I-25, Santa Fe & Frontage Road Traffic

Zhanna 10:19:40 AM K:\08276\16311\Phase 2\Traffic_ITS\Drawings\16311TRAF_PH2_Const.Phasing_Notes09.dgn
9/24/2010 CDOT-PDFHighQuality_XM.pltcfg CDOT-PenTable.tbl

Print Date: 9/24/2010
File Name: 16311TRAF_PH2_Const.Phasing_Notes09.dgn
Horiz. Scale: 1:1 Vert. Scale: As Noted
Unit Information Unit Leader Initials

FELSBURG HOLT & ULLEVIG 6300 South Syracuse Way Centennial, CO 80111

Sheet Revisions

Date:	Comments	Init.

Colorado Department of Transportation
2000 South Holly Street
Denver, CO 80222
Phone: 303-972-9112 FAX: 303-972-9114
Region 6 RLB

As Constructed
No Revisions:
Revised:
Void:

I-25/SANTA FE INTERCHANGE
CONSTRUCTION PHASING
NOTES PHASE 9

Designer: JSC
Detailer: ZV
Sheet Subset: TRAFFIC
Structure Numbers
Subset Sheets: ST-18 of X

Project No./Code
IM 0254-394
16311
Sheet Number 349

TABULATION OF CONSTRUCTION PHASING ITEMS

STATION/LOCATION	DETOUR (1)	REMOVAL OF ASPHALT MAT (PLANING)	REMOVAL OF ASPHALT MAT	HOT MIX ASPHALT (PATCHING) (ASPHALT)	HOTMIX ASPHALT (GRS)(100) (PG 64-22)	HOTMIX ASPHALT (GRSX)(100) (PG 76-28)	AGGREGATE BASE COURSE (CLASS 6)	EMBANKMENT MATERIAL (2)	UNCLASSIFIED EXCAVATION (2)	GUARDRAIL (TYPE 7) (STYLE CE)
	SY	SY	SY	TON	TON	TON	TON	CY	CY	LF
PHASE 1										
SB SANTA FE DETOUR	2941	1097		121						
NB SANTA FE DETOUR	1909	1261		139						
NB I-25 WIDENING			57	290			527	X	X	200
PHASE 2										
SB I-25 CROSS OVER DETOUR 1	5764	441		49						
SB I-25 CROSS OVER DETOUR 2	4039									
FRONTAGE ROAD MODIFICATION		289		296			645	X	X	
PHASE 3										
SB SANTA FE		X		X						
NB SANTA FE		X		X						
PHASE 4										
RAMP 3		X		X						
SB I-25				X			X			
RAMP 2 DETOUR	X	X		X						
PHASE 5										
NB I-25 CROSS OVER DETOUR	X	X		X						
PHASE 7										
NB I-25				X			X			
HOME DEPOT ACCESS		X		X						
PROJECT TOTALS	X	X		X			X	X	X	X

FOR INFORMATION ONLY- INCLUDED IN THE COST OF DETOUR (SY)

STATION/LOCATION	EMBANKMENT MATERIAL (2)	UNCLASSIFIED EXCAVATION (2)	HOTMIX ASPHALT (GRS)(100) (PG64-22)	AGGREGATE BASE COURSE (CLASS 6)
	CY	CY	TON	TON
PHASE 1				
SB SANTA FE DETOUR	X	X	809	1320
NB SANTA FE DETOUR	X	X	525	857
PHASE 2				
SB I-25 CROSS OVER DETOUR 1	X	X	1902	3450
SB I-25 CROSS OVER 2 DETOUR 2	X	X	1333	2418
PHASE 4				
RAMP 2 DETOUR	X	X	X	X
PHASE 5				
NB I-25 CROSS OVER DETOUR	X	X	X	X
PROJECT TOTALS (FOR INFORMATION ONLY)	X	X	X	X

PHASING NOTES:

(1) DETOUR WORK CONSISTS OF CONSTRUCTING DETOUR PAVEMENT AND EMBANKMENT, MAINTENACE OF THE DETUORS, REMOVING THE DETOURS AND RESTORING THE AREA DISTURBED BY THE DETOURS TO THE ORIGINAL GRADE AND CONDITION. ITEMS SHOWN IN THE TABULATION MARKED "FOR INFORMATION ONLY" ARE INTENDED TO IDENTIFY OTHER, BUT NOT ALL, WORK REQUIRED IN ADDITION TO DETOUR PAVEMENT AND EARTHWORK. PAYMENT SHALL BE MADE UNDER ITEM 621-00425 DETOUR, SY. REFER TO PROJECT SPECIAL PROVISION OF SECTION 621, DETOUR, FOR ADDITIONAL INFORMATION.

(2) EARTHWORK QUANTITIES IN THIS TABULATION OF QUANTITIES WERE CALCULTED BETWEEN THE TOP OF FINISHED GRADE AND EXISTING GROUND ELEVATIONS. CUT AND FILL SLOPES ARE ASSUMED TO BE 3:1.

(3) SEE TRAFFIC CONTROL TABULATIONS FOR QUANTITIES ASSOCIATED WITH TRAFFIC CONTROL PLANS (TCP).

(4) SEE WALL TABULATIONS FOR QUANTITIES ASSOCIATED WITH SHORING & RETAINING WALLS.

Print Date: 9/27/2010
File Name: 16311TRAF_PH2_Const.Phasing_Tab.dgn
Horiz. Scale: 1:1 Vert. Scale: As Noted
Unit Information Unit Leader Initials

FELSBURG HOLT & ULLEVIG 6300 South Syracuse Way Centennial, CO 80111

Sheet Revisions

Date:	Comments	Init.

Colorado Department of Transportation
DEPARTMENT OF TRANSPORTATION
2000 South Holly Street
Denver, CO 80222
Phone: 303-972-9112 FAX: 303-972-9114
Region 6 RLB

As Constructed
No Revisions:
Revised:
Void:

I-25/SANTA FE INTERCHANGE
CONSTRUCTION PHASING
TABULATION OF PHASING ITEMS

Designer: JSC
Detailer: ZV
Sheet Subset: TRAFFIC
Structure Numbers:
Subset Sheets: TD-1 of 1

Project No./Code
IM 0254-394
16311
Sheet Number 350

Janis 4:58:58 PM K:\08276\16311\Phase 2\Traffic_ITS\Drawings\16311TRAF_PH2_Const.Phasing_Tab.dgn
9/27/2010 CDOT-DefaultPrinter_XM.pltcfg CDOT-PenTable.tbl

PHASE 1.A.1
SB SANTA FE DETOUR

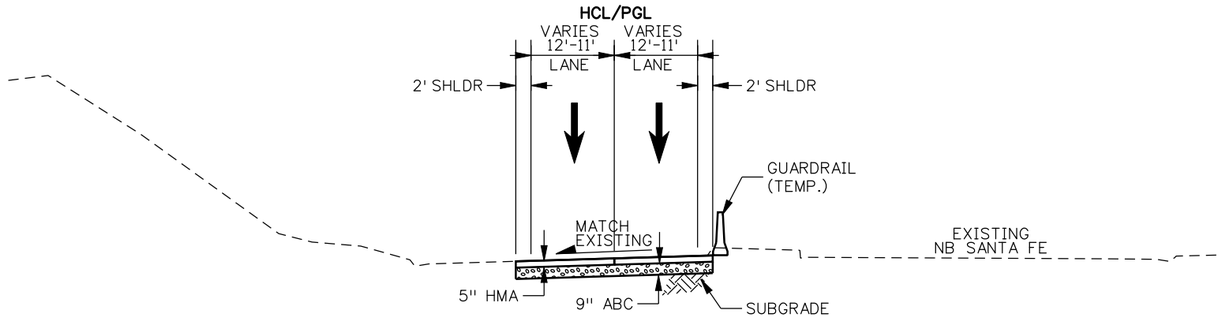

STA. 30+00.00 TO STA. 32+18.02

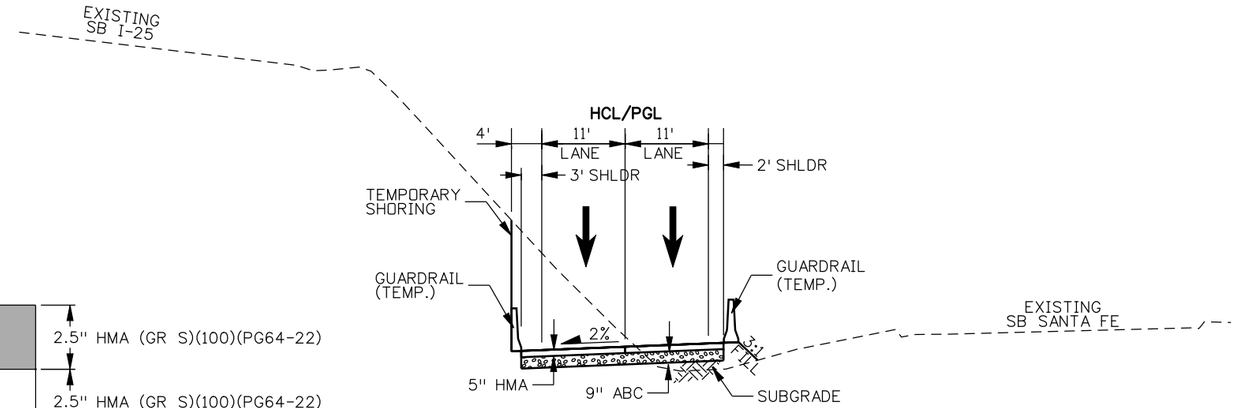

STA. 32+18.02 TO STA. 38+51.92

HMA LIFT DETAIL

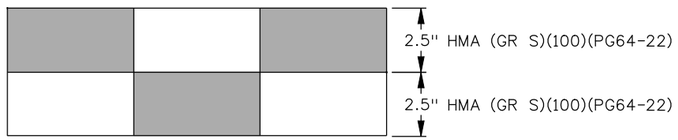

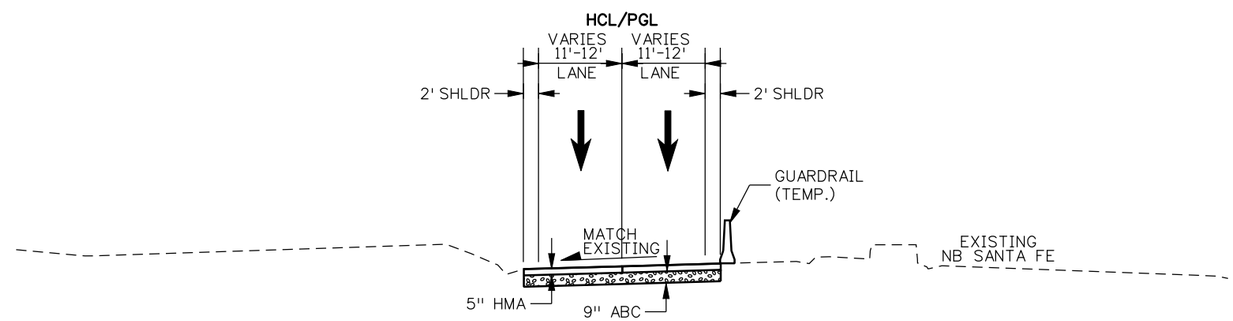

STA. 38+51.92 TO STA. 41+57.36

Print Date: 9/27/2010		Sheet Revisions			Colorado Department of Transportation	As Constructed	I-25/SANTA FE INTERCHANGE CONSTRUCTION PHASING PHASE 1 TYPICAL SECTIONS		Project No./Code
File Name: 16311TRAF_PH2_Typ_Sect01.dgn		Date:	Comments	Init.	2000 South Holly Street Denver, CO 80222 Phone: 303-972-9112 FAX: 303-972-9114	No Revisions:			IM 0254-394
Horiz. Scale: 1:20 Vert. Scale: As Noted						Revised:	Designer: JSC	Structure Numbers	16311
Unit Information Unit Leader Initials					Region 6 RLB	Void:	Detailer: ZV		Sheet Number 351
FELSBURG HOLT & ULLEVIG 6300 South Syracuse Way Centennial, CO 80111							Sheet Subset: TYPICAL	Subset Sheets: ST-19 of XX	

Zhanna 9:01:23 AM K:\08276\16311\Phase 2\Traffic_ITS\Drawings\16311TRAF_PH2_Typ_Sect01.dgn
9/27/2010 CDOT-PDFHighQuality_XM.pltcfg CDOT-PenTable.tbl

PHASE 1.A.3
NB SANTA FE DETOUR

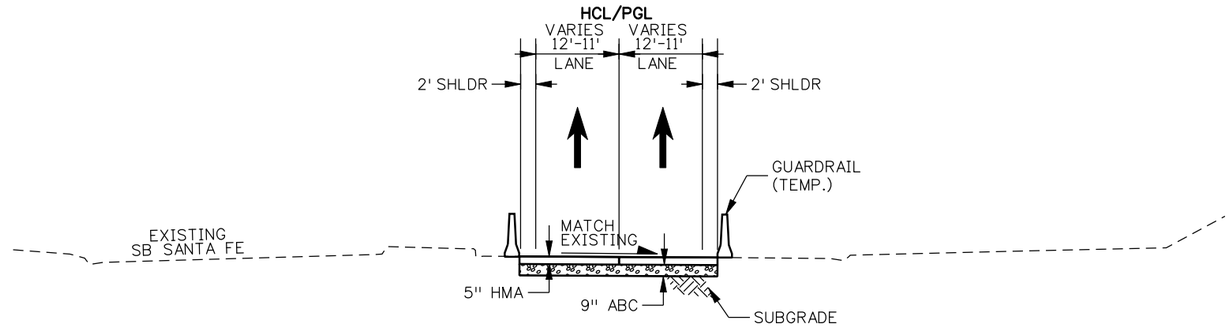

STA. 11+00.00 TO STA. 11+65.54
STA. 18+53.79 TO STA. 19+74.88

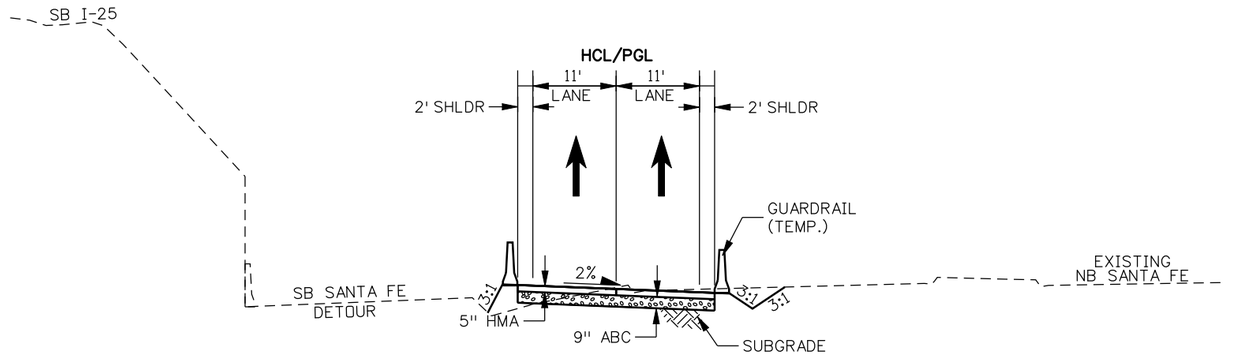

STA. 11+65.54 TO STA. 16+00.00

HMA LIFT DETAIL

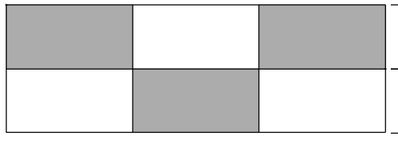

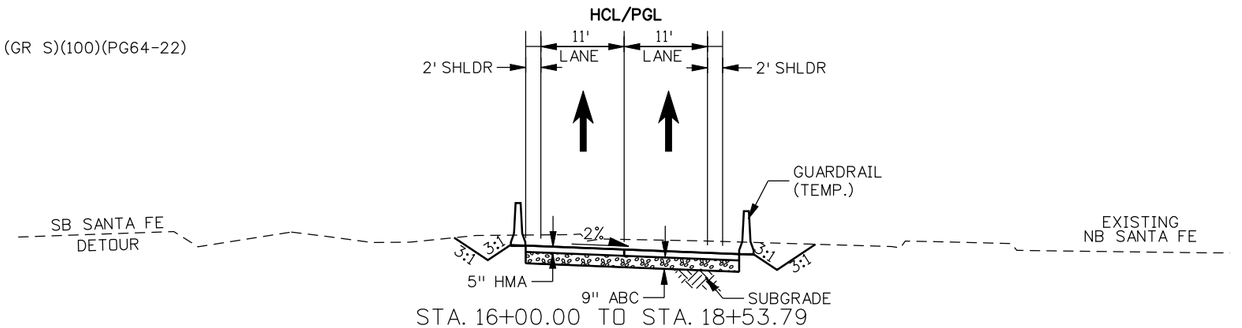

STA. 16+00.00 TO STA. 18+53.79

Print Date: 9/27/2010	Sheet Revisions			Colorado Department of Transportation	As Constructed
File Name: 16311TRAF_PH2_Typ_Sect02.dgn	Date:	Comments	Init.	2000 South Holly Street Denver, CO 80222 Phone: 303-972-9112 FAX: 303-972-9114	No Revisions:
Horiz. Scale: 1:20 Vert. Scale: As Noted				Region 6 RLB	Revised:
Unit Information Unit Leader Initials					Void:
FELSBURG HOLT & ULLEVIG 6300 South Syracuse Way Centennial, CO 80111					

I-25/SANTA FE INTERCHANGE CONSTRUCTION PHASING PHASE 1 TYPICAL SECTIONS			
Designer: JSC	Structure Numbers		Project No./Code: IM 0254-394
Detailer: ZV			16311
Sheet Subset: TYPICAL	Subset Sheets: ST-20 of XX		Sheet Number 352

Zhanna 9:03:21 AM K:\08276\16311\Phase 2\Traffic_ITS\Drawings\16311TRAF_PH2_Typ_Sect02.dgn
9/27/2010 CDOT-PDFHighQuality_XM.pltcfg CDOT-PenTable.tbl

PHASE 1.C.1
WIDEN NB I-25

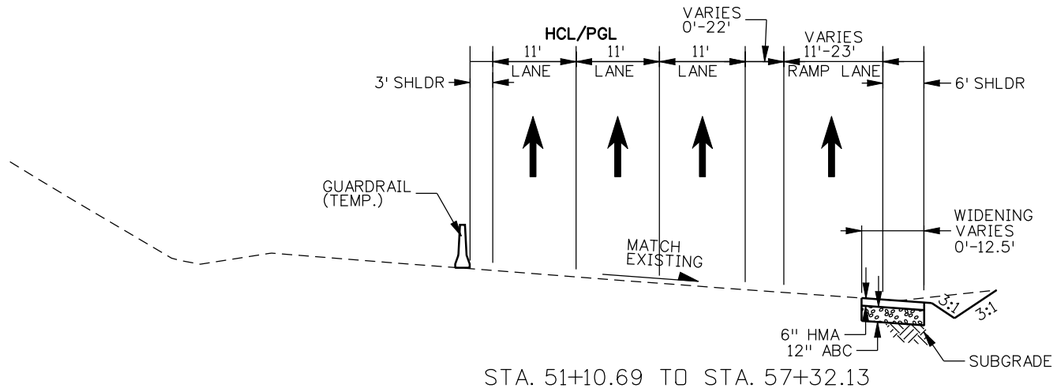

STA. 51+10.69 TO STA. 57+32.13

HMA LIFT DETAIL

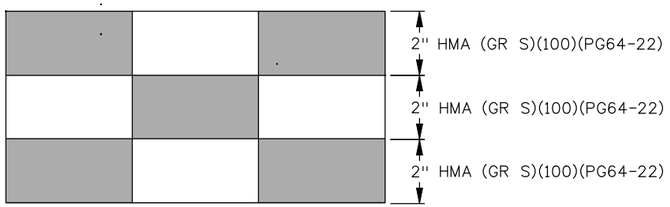

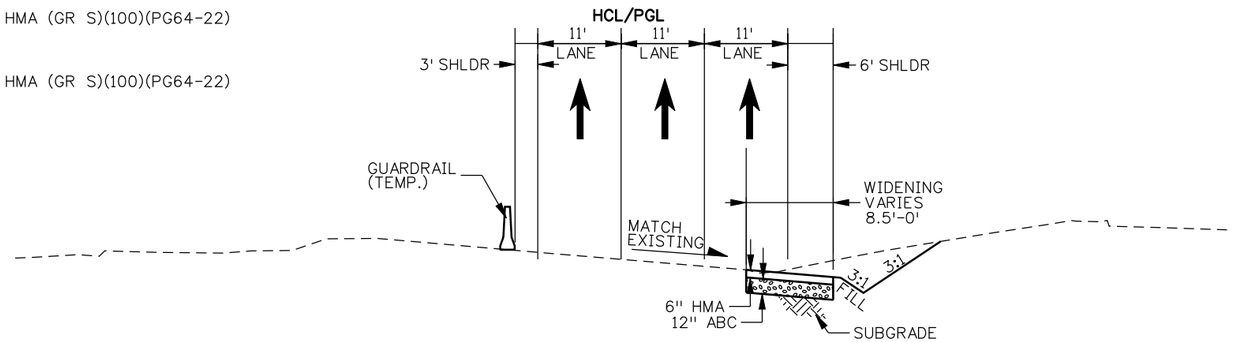

STA. 57+80.51 TO STA. 62+67.94

Zhanna 9:05:06 AM K:\08276\16311\Phase 2\Traffic_ITS\Drawings\16311TRAF_PH2_Typ_Sect03.dgn
9/27/2010 CDOT-PDFHighQuality_XM.pltcfg CDOT-PenTable.tbl

Print Date: 9/27/2010	Sheet Revisions	Colorado Department of Transportation	As Constructed
File Name: 16311TRAF_PH2_Typ_Sect03.dgn	Date: / Comments / Init.	2000 South Holly Street, Denver, CO 80222	No Revisions:
Horiz. Scale: 1:20 Vert. Scale: As Noted		Phone: 303-972-9112 FAX: 303-972-9114	Revised:
Unit Information Unit Leader Initials		Region 6 RLB	Void:
FELSBURG HOLT & ULLEVIG 6300 South Syracuse Way, Centennial, CO 80111			

I-25/SANTA FE INTERCHANGE CONSTRUCTION PHASING PHASE 1 TYPICAL SECTIONS			Project No./Code
Designer: JSC	Structure Numbers		IM 0254-394
Detailer: ZV			16311
Sheet Subset: TYPICAL	Subset Sheets: ST-21 of XX		Sheet Number 353

PHASE 2.B.1
SB I-25 CROSS OVER DETOUR SOUTH OF BRIDGE (I-25 OVER SANTA FE)

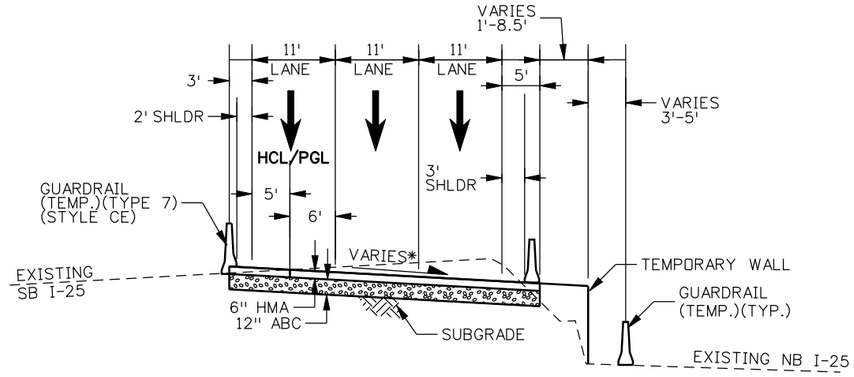

STA. 220+00.00 TO STA. 224+00.00

* SEE CROSS OVER DETOUR PROFILES FOR SUPERELEVATION TRANSITIONS

HMA LIFT DETAIL

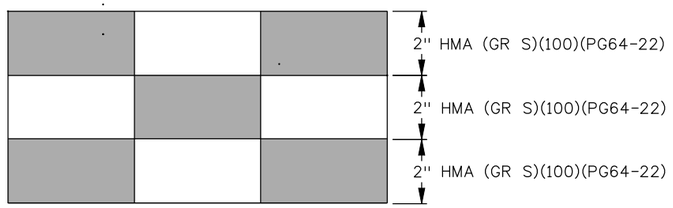

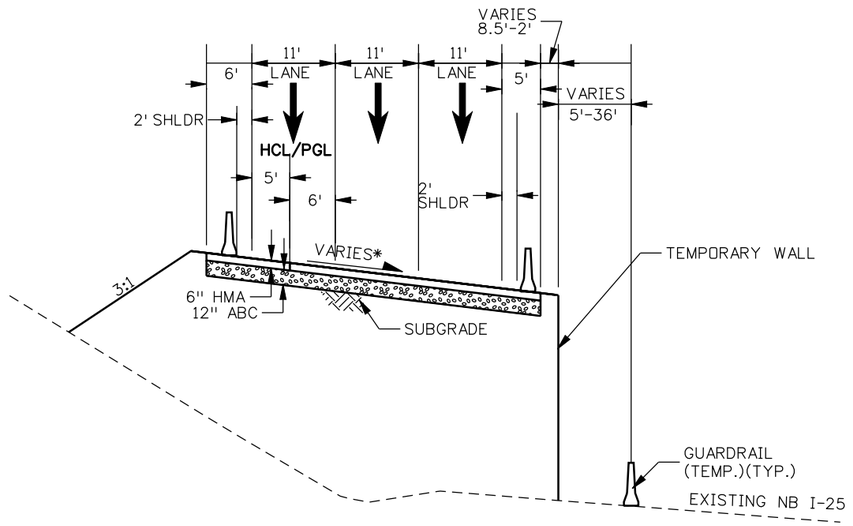

STA. 224+00.00 TO STA. 230+61.57

* SEE CROSS OVER DETOUR PROFILES FOR SUPERELEVATION TRANSITIONS

Print Date: 9/27/2010		Sheet Revisions			Colorado Department of Transportation	As Constructed	I-25/SANTA FE INTERCHANGE CONSTRUCTION PHASING PHASE 2 TYPICAL SECTIONS	Project No./Code
File Name: 16311TRAF_PH2_Typ_Sect04.dgn		Date:	Comments	Init.	2000 South Holly Street Denver, CO 80222 Phone: 303-972-9112 FAX: 303-972-9114	No Revisions:		IM 0254-394
Horiz. Scale: 1:20 Vert. Scale: As Noted						Revised:	Designer: JSC / Detailer: ZV / Sheet Subset: TYPICAL	16311
Unit Information Unit Leader Initials					Region 6 RLB	Void:	Structure Numbers / Subset Sheets: ST-22of XX	Sheet Number 354
FELSBURG HOLT & ULLEVIG 6300 South Syracuse Way Centennial, CO 80111								

Zhanna 9:06:47 AM K:\08276\16311\Phase 2\Traffic_ITS\Drawings\16311TRAF_PH2_Typ_Sect04.dgn
9/27/2010 CDOT-PDFHighQuality_XM.pltcfg CDOT-PenTable.tbl

PHASE 2.B.1
SB I-25 CROSS OVER DETOUR SOUTH OF BRIDGE (I-25 OVER SANTA FE)

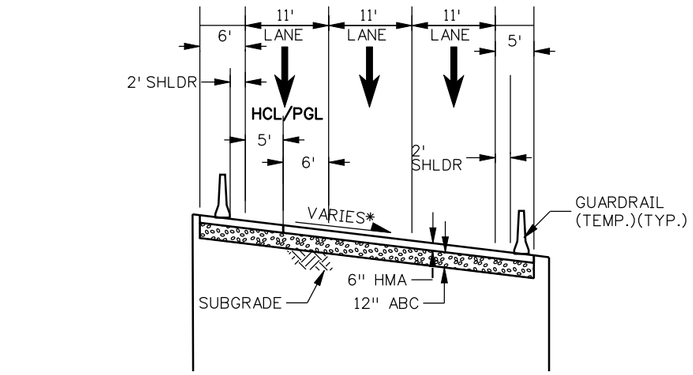

STA. 230+64.57 TO STA. 231+92.86
TEMPORARY STRUCTURE **

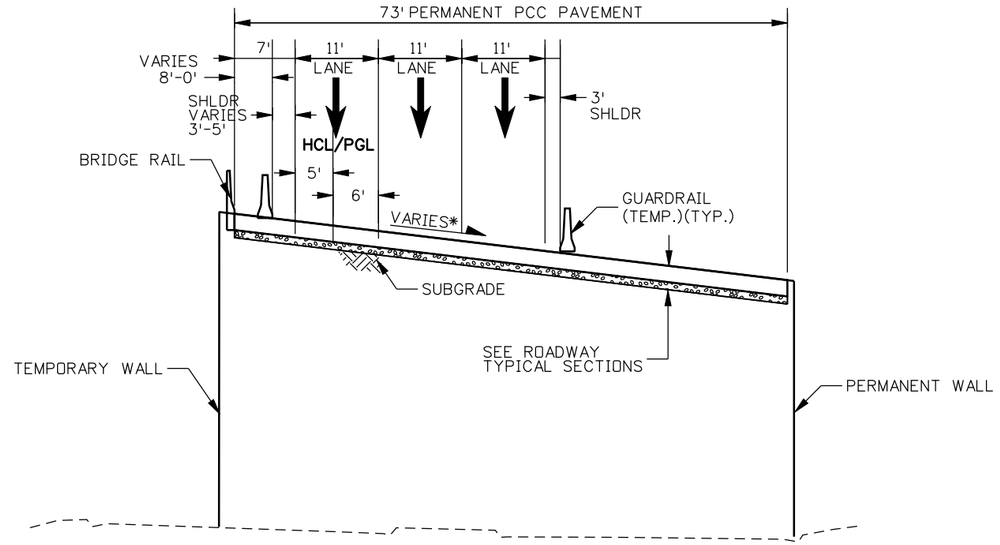

DETOUR STA. 233+51.23 TO STA. 234+18.99
= NB I-25 STA: 1629+98.00 TO STA. 1630+59.22

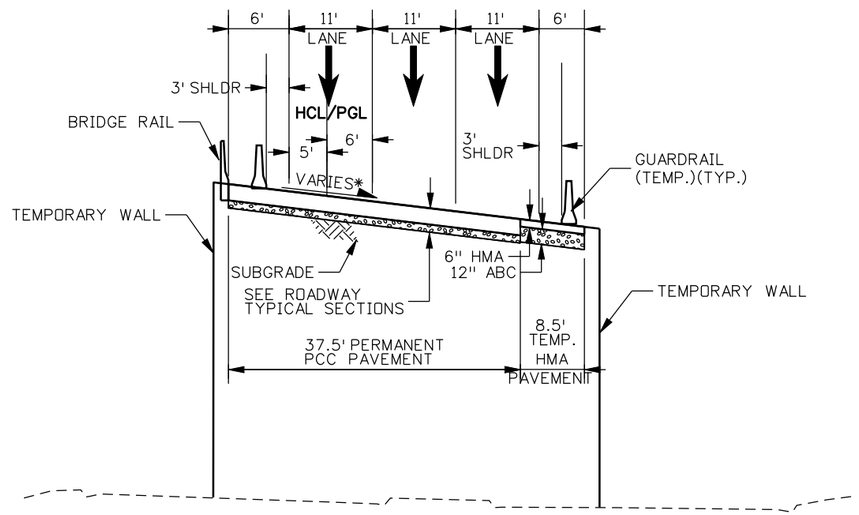

DETOUR STA. 231+92.86 TO STA. 233+51.23
= NB I-25 STA. 1628+33.09 TO STA. 1629+98.00

HMA LIFT DETAIL

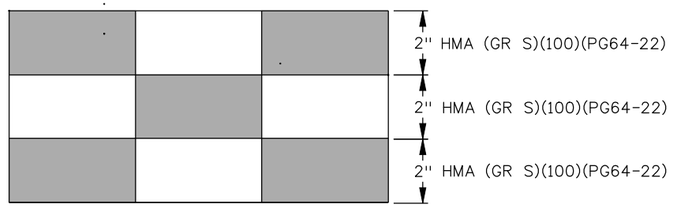

NOTE: NB I-25 OVER SANTA FE STRUCTURE TO BE CONSTRUCTED IN ITS ENTIRETY (STA. 1630+59.22 TO STA. 1637+13.28)

* SEE ROADWAY PLANS FOR SUPERELEVATION TRANSITIONS.
** SEE TEMPORARY BRIDGE PLANS FOR MORE INFORMATION.

Print Date: 9/27/2010	Sheet Revisions			Colorado Department of Transportation	As Constructed	I-25/SANTA FE INTERCHANGE CONSTRUCTION PHASING PHASE 2 TYPICAL SECTIONS	Project No./Code
File Name: 16311TRAF_PH2_Typ_Sect04A.dgn	Date:	Comments	Init.	2000 South Holly Street Denver, CO 80222 Phone: 303-972-9112 FAX: 303-972-9114	No Revisions:	Designer: JSC	IM 0254-394
Horiz. Scale: 1:20 Vert. Scale: As Noted				Region 6 RLB	Revised:	Detailer: ZV	Structure Numbers: 16311
Unit Information Unit Leader Initials					Void:	Sheet Subset: TYPICAL	Subset Sheets: ST-23 of XX
FELSBURG HOLT & ULLEVIG 6300 South Syracuse Way Centennial, CO 80111							Sheet Number 355

Zhanna 9:49:52 AM K:\08276\16311\Phase 2\Traffic_ITS\Drawings\16311TRAF_PH2_Typ_Sect04A.dgn
9/27/2010 CDOT-PDFHighQuality_XM.pltcfg CDOT-PenTable.tbl

PHASE 2.B.1
SB I-25 CROSS OVER DETOUR NORTH OF BRIDGE (I-25 OVER SANTA FE)

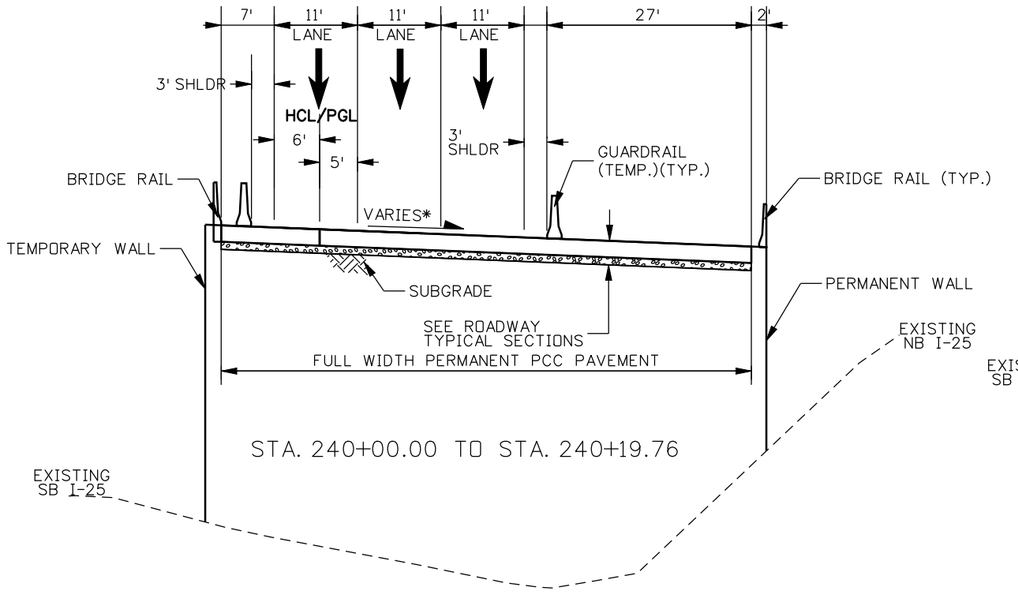

STA. 240+00.00 TO STA. 240+19.76

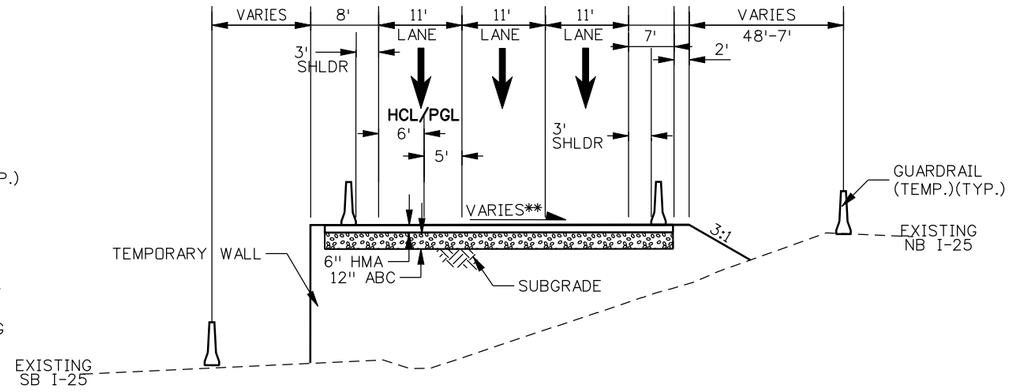

STA. 240+66.86 TO STA. 245+10.74

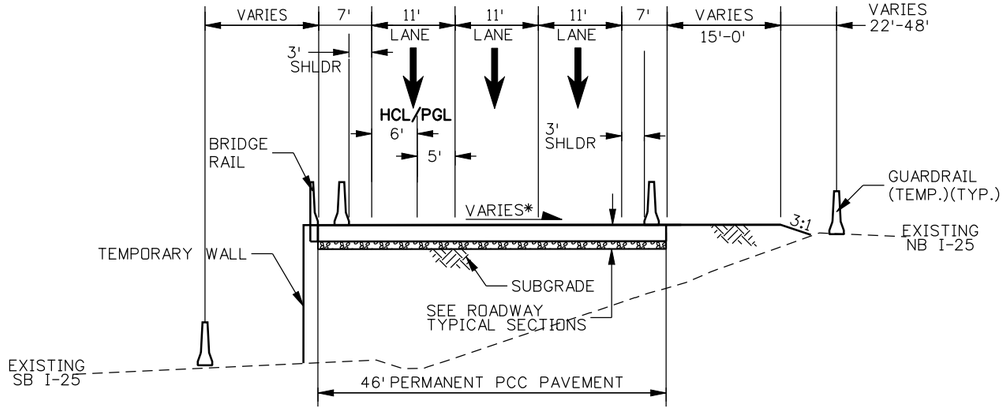

STA. 240+19.76 TO STA. 240+66.86

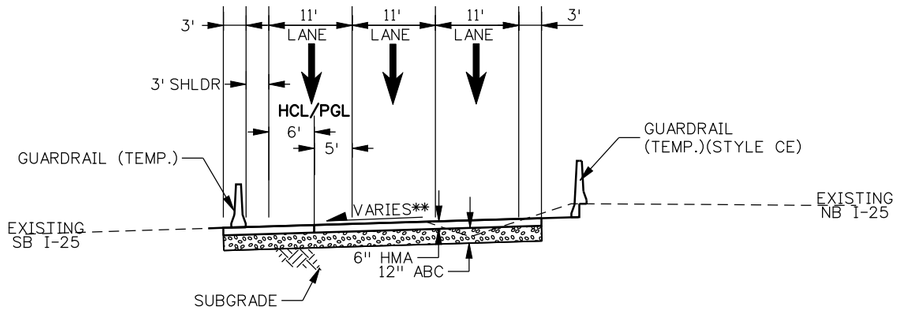

STA. 245+10.74 TO STA. 249+02.11

HMA LIFT DETAIL

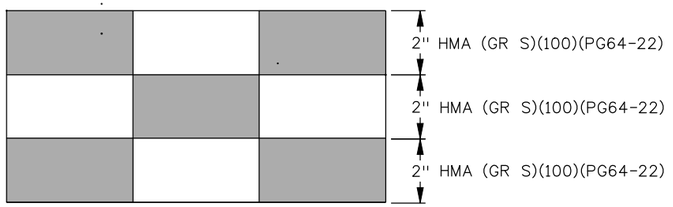

NOTE: * SEE ROADWAY PLANS FOR SUPERELEVATION TRANSITIONS.

** SEE CROSS OVER DETOUR PROFILE FOR SUPERELEVATION TRANSITIONS.

Print Date: 9/27/2010
File Name: 16311TRAF_PH2_Typ_Sect05.dgn
Horiz. Scale: 1:20 Vert. Scale: As Noted
Unit Information Unit Leader Initials

FELSBURG HOLT & ULLEVIG 6300 South Syracuse Way Centennial, CO 80111

Sheet Revisions		
Date:	Comments	Init.

Colorado Department of Transportation
DEPARTMENT OF TRANSPORTATION
2000 South Holly Street
Denver, CO 80222
Phone: 303-972-9112 FAX: 303-972-9114
Region 6 RLB

As Constructed
No Revisions:
Revised:
Void:

I-25/SANTA FE INTERCHANGE
CONSTRUCTION PHASING
PHASE 2 TYPICAL SECTIONS

Designer: JSC
Detailer: ZV
Sheet Subset: TYPICAL
Structure Numbers:
Subset Sheets: ST-24 of XX

Project No./Code
IM 0254-394
16311
Sheet Number 356

Zhanna 10:07:06 AM K:\08276\16311\Phase 2\Traffic_ITS\Drawings\16311TRAF_PH2_Typ_Sect05.dgn
9/27/2010 CDOT-PDFHighQuality_XM.pltcfg CDOT-PenTable.tbl

PHASE 3.C.1
SB SANTA FE LANE CONSTRUCTION

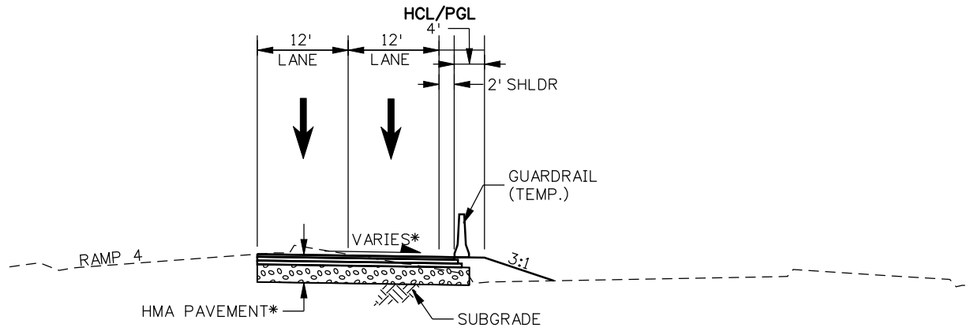

STA. 805+00.00 TO STA. 808+80.44

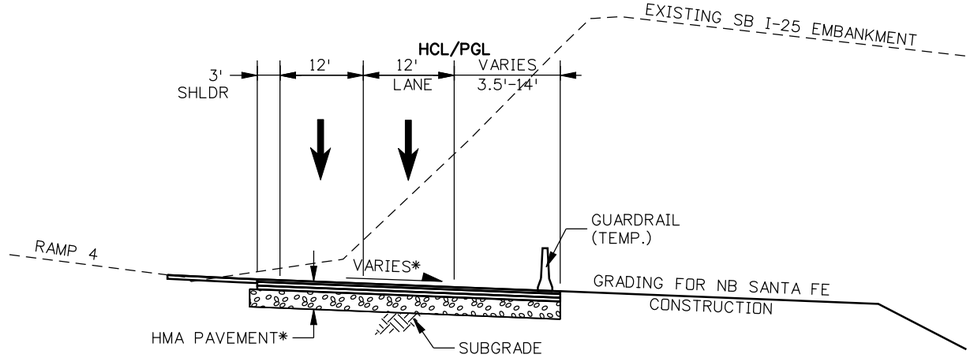

STA. 808+80.44 TO STA. 814+06.77

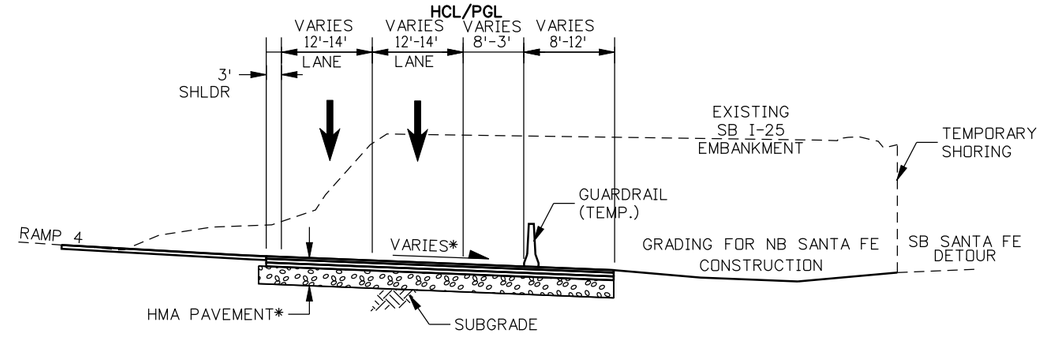

STA. 814+06.77 TO STA.816+10.53

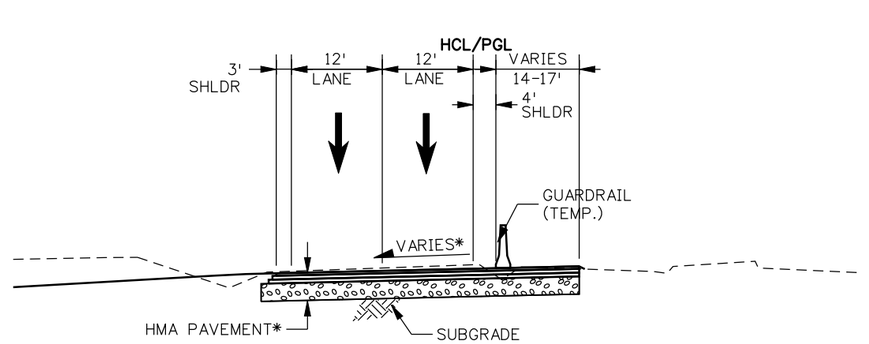

STA.816+10.53 TO STA. 818+42.21

NOTE: * SEE ROADWAY PLANS, PROFILES AND TYPICAL SECTIONS FOR MORE INFORMATION.

Print Date: 9/27/2010		Sheet Revisions			Colorado Department of Transportation	As Constructed	I-25/SANTA FE INTERCHANGE CONSTRUCTION PHASING PHASE 3 TYPICAL SECTIONS	Project No./Code
File Name: 16311TRAF_PH2_Typ_Sect06.dgn		Date:	Comments	Init.	2000 South Holly Street Denver, CO 80222 Phone: 303-972-9112 FAX: 303-972-9114	No Revisions:		IM 0254-394
Horiz. Scale: 1:20 Vert. Scale: As Noted						Revised:	Designer: JSC / Structure Numbers:	16311
Unit Information Unit Leader Initials					Region 6 RLB	Void:	Detailer: ZV / Structure Numbers:	Sheet Number 357
FELSBURG HOLT & ULLEVIG 6300 South Syracuse Way Centennial, CO 80111							Sheet Subset: TYPICAL / Subset Sheets: ST-25of XX	

Zhanna 10:11:51 AM K:\08276\16311\Phase 2\Traffic_ITS\Drawings\16311TRAF_PH2_Typ_Sect06.dgn
9/27/2010 CDOT-PDFHighQuality_XM.pltcfg CDOT-PenTable.tbl

PHASE 3.C.3
NB SANTA FE LANE CONSTRUCTION

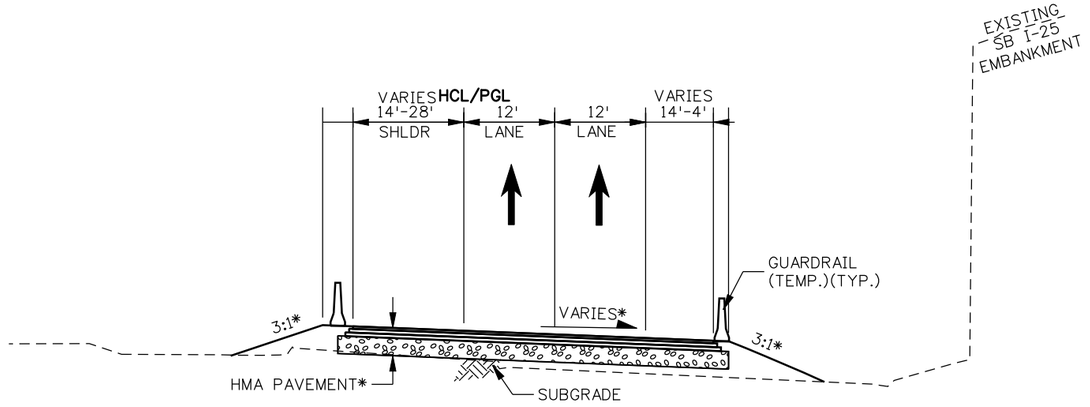

STA. 721+55.38 TO STA. 725+31.77

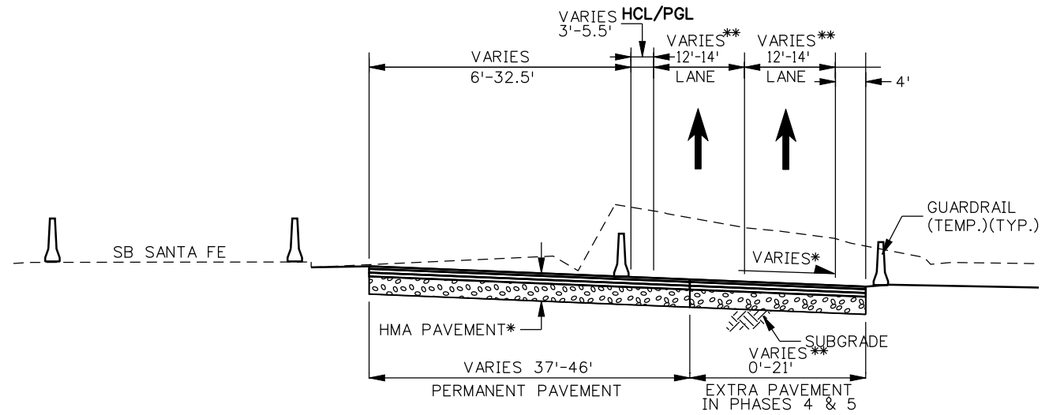

STA. 730+19.66 TO STA.734+68.41

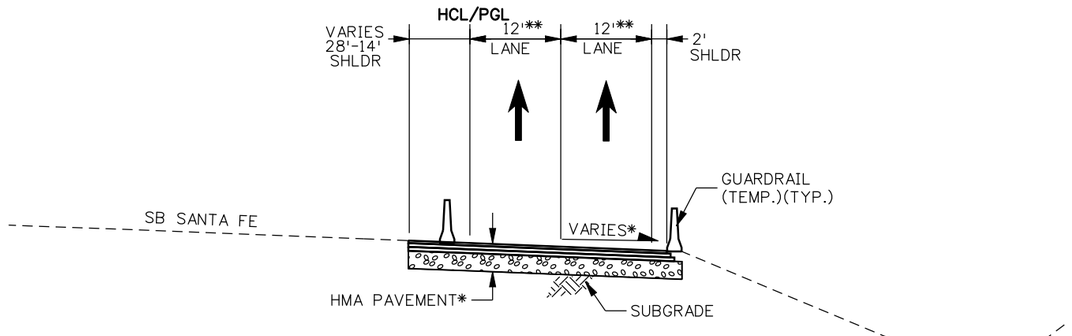

STA. 725+31.77 TO STA. 730+19.66

NOTE: * SEE ROADWAY PLANS, PROFILES & TYPICAL SECTIONS FOR MORE INFORMATION.
** SEE DETOUR PLAN FOR NB SANTA FE LANEAGE TO BE USED DURING PHASE 4 & 5.

Zhanna 10:16:19 AM K:\08276\16311\Phase 2\Traffic_ITS\Drawings\16311TRAF_PH2_Typ_Sect07.dgn
9/27/2010 CDOT-PDFHighQuality_XM.pltcfg CDOT-PenTable.tbl

Print Date: 9/27/2010	Sheet Revisions			Colorado Department of Transportation	As Constructed
File Name: 16311TRAF_PH2_Typ_Sect07.dgn	Date:	Comments	Init.	2000 South Holly Street	No Revisions:
Horiz. Scale: 1:20 Vert. Scale: As Noted				Denver, CO 80222	Revised:
Unit Information Unit Leader Initials				Phone: 303-972-9112 FAX: 303-972-9114	Void:
FELSBURG HOLT & ULLEVIG 6300 South Syracuse Way Centennial, CO 80111				Region 6 RLB	

I-25/SANTA FE INTERCHANGE CONSTRUCTION PHASING PHASE 3 TYPICAL SECTIONS			Project No./Code
			IM 0254-394
Designer: JSC	Structure Numbers		16311
Detailer: ZV			
Sheet Subset: TYPICAL	Subset Sheets: ST-26of XX		Sheet Number 358

1. Site Description

Additional information for permitted projects. For information only to fulfill the CDPS-SCP (Colorado Discharge Permit – Stormwater Construction Permit).

A. Project Site Description:

This project will replace Bridge F-16-XS (Interstate 25 over Santa Fe Drive), and Bridge F-16-XR (northbound Santa Fe to northbound Interstate 25). Additional work includes retaining walls, Interstate 25 mainline re-alignment/re-construction, connecting ramp re-alignment/re-construction, re-alignment of Santa Fe Drive and access to Home Depot. Grading, utility relocations, storm sewer construction, bridge demolitions, and placement of temporary and permanent pavement will be required. Erosion control will be required throughout the construction period, and erosion control devices shall be added, repaired, modified, and maintained as needed in order to limit erosion and sedimentation at the project site.

B. Proposed Sequencing For Major Activities:

1. Construct field office/staging areas and provide erosion control for these locations.
2. Install erosion control Best Management Practices (BMPs) around the perimeter of the project site as shown on the plans. Construct the vehicle tracking control and the concrete washouts as shown on the plans or as directed by the engineer or the erosion control supervisor (ECS).
3. Construct Stage 1.2, which includes northbound Santa Fe Drive to northbound Interstate 25 (new bridges and roadway). Provide erosion control as shown on the plans. Contractor shall limit construction activities to the area within the limits of disturbance line (LDA line shown on grading sheets).
4. Construct Stage 1.3, which includes Interstate 25 re-construction and bridge construction from the existing Broadway Bridge to the Interstate 25/Alameda Avenue project built during Stage 1.1. Provide and maintain erosion control as shown on the plans and add additional BMPs as needed.
5. Add new BMPs and modify existing BMPs for detours and construction as needed. Provide and maintain erosion control as shown on the plans.
6. Pave and finish site grading for project area.
7. Final grading and stabilization of the construction site as construction is finalized.
8. The field office area, staging area, concrete washouts, and stabilized construction entrances can be removed.

C. Total Acres Of Disturbance:

1. Total area of construction site: 41 acres
2. Total area of disturbance: 41 acres (includes clearing, grading, excavation, stockpiling of fill materials, demolition, areas with heavy equipment/vehicle traffic, installation of new or improved haul roads and access roads, staging areas, dedicated borrow/fill areas and storage areas that will disturb existing vegetative cover).
3. Acreage of seeding: 28 acres. If areas outside of the project limits of disturbed area (LDA line as shown on grading plan) are disturbed, contractor shall re-establish at his/her own expense and will not be paid for this separately.

D. Existing Soil Data: Existing soils are silty to sandy clay fill, and gravelly sand.

E. Existing Vegetation, Including Percent Cover: Percent cover is very variable with patches of native grasses to weeds and bare soils. Pictures of pre-existing conditions will be kept in the SWMP to document vegetative cover at the different areas listed. The average percent of cover on the May 2010 date of survey was 70%.

F. Potential Pollutants Sources: See First Construction Activities under Potential Pollutant Sources. The ECS shall prepare a list of all potential pollutants and their locations in accordance with subsection 107.25.

G. Receiving Water:

Outfall locations: Outfall locations are all to the South Platte River and they are shown on the plan sheets.

1. Outfall locations:
   - -Sta. 711+50 – Existing Outfall – Size Unknown (There will be no change to this outfall)
   - -Sta. 724+50 – Existing Outfall – 15" RCP (There will be no change to this outfall)
   - -Sta. 813+50 – Existing Outfall – 54" Brick (There will be no change to this outfall)
   - -Sta. 634+00 - Proposed Outfall – ? RCP (no plans from Muller) (This will be a new outfall)
   - -Sta. 635+00 - Existing Outfall – 15" RCP (There will be no change to this outfall)
   - -Sta. 639+00 – Existing Outfall – 36" RCP (There will be no change to this outfall)
   - -Sta. 641+75 – Existing Outfall – Triple Cell 16X7 RCBC (There will be no change to this outfall)
   - -Sta. 647+25 – Existing Outfall – 48" RCP (There will be no change to this outfall)

2. Names of receiving water(s) on site and the ultimate receiving water: Receiving water and the ultimate outfall is the South Platte River.
3. Distance ultimate receiving water is from project: The South Platte River is adjacent to the project site.
4. Does the receiving water have an approved total minimum daily loads (TMDL): No.
5. Allowable non-stormwater discharges: Yes, see below.

H. Allowable Non-Stormwater Discharges:

1. Landscape irrigation return flow from offsite areas may occur.
2. Groundwater and stormwater dewatering: Discharge to the ground of water from construction dewatering activities may be authorized provided that:
   a. The source is groundwater and/or groundwater combined with stormwater that does not contain pollutants.
   b. The source and BMPs are identified in the SWMP.
   c. Discharges do not leave the site as surface runoff or to surface waters.
3. If discharges do not meet the above criteria, a separate permit from the Department of Health will be required. Contaminated groundwater requiring coverage under a separate permit may include groundwater contaminated with pollutants from a landfill, mining activities, industrial pollutant plumes, underground storage tank, etc.

I. Environmental Impacts:

1. Wetland Impacts: Yes, at new storm sewer outfall (see plan sheets for location)
2. Stream Impacts: Yes, at new storm sewer outfall (see plan sheets for location)
3. Threatened and Endangered Species: No

2. Site Map Components

Pre-construction

A. Construction Site Boundaries: See Grading and Erosion Control Plans
B. All Areas Of Ground Surface Disturbance: See Grading and Erosion Control Plans
C. Areas Of Cut And Fill: See Grading and Erosion Control Plans
D. Location Of All Structural BMPs Identified In The SWMP: See Grading and Erosion Control Plans
E. Location Of Non-Structural BMPs As Applicable In The SWMP: See Grading and Erosion Control Plans
F. Springs, Stream, Wetlands And Other Surface Water: See Grading and Erosion Control Plans
G. Protection Of Trees, Shrubs, Cultural Resources And Mature Vegetation: See Grading and Erosion Control Plans

3. SWMP Administrator For Design:

Edward L. Lind, P.E., Water Resources Engineer for Felsburg Holt & Ullevig is responsible for developing the SWMP sheets during the design phase.

4. Stormwater Management Controls First Construction Activities

The Contractor Shall Perform The Following:

A. Designate A SWMP Administrator/Erosion Control Supervisor: The Erosion Control Supervisor for construction will be_____ (To be filled out at time of construction; designate the individual(s) responsible for implementing, maintaining and revising SWMP, including the title and contact information. The activities and responsibilities of the administrator shall address all aspects of the projects SWMP).

B. Potential Pollutant Sources: Evaluate, identify and describe all potential sources of pollutants at the site in accordance with subsection 107.25 and place in the SWMP notebook. All BMPs related to potential pollutants shall be shown on the SWMP site map by the contractor's ECS.

C. Best Management Practices (BMPs) For Stormwater Pollution Prevention Phased BMP Implementation:

During design: fields are marked when used in the SWMP.

During construction: the ECS shall update the checked boxes to match site conditions. Clearly describe the relationship between the phases of construction and the implementation of BMP controls. Add a narrative to the table or to the site map describing why the BMPs are being used in specific locations.

D. Offsite Drainage (Run-on Water)

Describe and record BMPs on the plans that have been implemented to address run-on water in accordance with subsection 208.03.

E. Stabilized Construction Entrance/Vehicle Tracking Control

BMPs shall be implemented in accordance with subsection 208.04.

F. Perimeter Control

1. Perimeter Control shall be established as the first item on the SWMP to prevent the potential for pollutants leaving the construction site boundaries, entering the stormwater drainage system, or discharging to state waters.
2. Perimeter control may consist of vegetation buffers, berms, silt fence, erosion logs, existing landforms, or other BMPs as approved.
3. Perimeter control shall be in accordance with subsection 208.04

Print Date: 9/27/2010	Sheet Revisions			Colorado Department of Transportation	As Constructed	I-25/SANTA FE INTERCHANGE	Project No./Code
File Name: 16311LAND_ENVI_PH2_SWM_Plan01.dgn	Date:	Comments	Init.	2000 South Holly Street Denver, CO 80222 Phone: 303-972-9112 FAX: 303-972-9114	No Revisions:	SWMP CONSTRUCTION PLAN SHEET	IM 0254-394
Horiz. Scale: 1:100 Vert. Scale: As Noted					Revised:	Designer: ELL / Detailer: RSA / Sheet Subset: SWMP	Structure Numbers: 16311
Unit Information Unit Leader Initials				Region 6 RLB	Void:	Subset Sheets: SW-1 of 4	Sheet Number 359
FELSBURG HOLT & ULLEVIG 6300 South Syracuse Way Centennial, CO 80111							

rynal 1:33:56 PM K:\08276\16311\Phase 2\Landscape_Environmental\Drawings\16311LAND_ENVI_PH2_SWM_Plan01.dgn
9/27/2010 CDOT-DefaultPrinter_XM.pltcfg

Structural BMP practices for erosion and sediment control; practices may include, but are not limited to:

	Type of Control	BMP as Designed	In use on site	First Construction Activities	During Construction	Interim/Final Stabilization
Temporary Berms	erosion			X	X	
Check Dams	sediment	X		X	X	
Silt Fence	sediment	X		X	X	
Erosion Logs	sediment	X		X	X	
Inlet Protection	erosion	X		X	X	
Outlet Protection	erosion	X		X	X	X
Gravel Bags	sediment	X		X	X	
Concrete Washouts	construction	X		X	X	
Stabilized Construction Entrance	construction	X		X	X	
Other						

South Platte River

Prior to construction of the water quality pond and its outlet pipe, fence (plastic), and erosion logs or other BMPs shall be placed to protect the South Platte River The cost of the BMPs and modifications required due to phasing shall be included in the item. Once work is complete in the area, seed and apply mulch/mulch tackifier or blanket per the plans. The ECS shall update the stormwater plans with locations, narratives, details, etc. for river work including, but not limited to, dewatering, access roads, etc.; ECS shall add information to the appropriate sections of the SWMP notebook.

Detour Side Slopes

Immediately after placement of detours, slopes shall be stabilized by spraying flexible growth medium onto all bare soils to prevent erosion from occurring.

Temporary Berms

Earth berms shall be placed as directed by the ECS where offsite or onsite storm waters can potentially cause erosion or sedimentation. They may be used for culvert protection, topside protection at an inlet, and inlet protection. They will collect sediment prior to its leaving the construction site. They shall be installed immediately after installation of the structure or roadway gutters as designated on the plans. Temporary Berms shall be maintained and kept in operating conditions per Section 208.

Check Dams

Check dams shall be placed as directed by the ECS where offsite or onsite storm waters can potentially cause erosion or sedimentation. They may be used for culvert protection, topside protection at an inlet, and inlet protection. They will collect sediment prior to its leaving the construction site. They shall be installed immediately after installation of the structure or roadway gutters as designated on the plans. Check dams shall be maintained and kept in operating conditions per Section 208.

Silt Fence

Silt fence shall be used as a perimeter control BMP and as a disturbed area BMP to capture sediment laden run-off from disturbed areas during construction. It shall be placed on the contour; ends shall be j-hooked to prevent water from running around the ends of fence. A maximum drainage area of one-quarter acre per 100 feet of silt fence length; maximum slope length behind the barrier is 100 feet. Silt fence shall be used at toe of slope and shall be placed prior to earthwork disturbance occurring, and during construction as required to limit sedimentation. Silt fence shall be placed 5' to 10' beyond toe of slope if possible to provide storage capacity. Silt fence shall be placed at locations indicated on the plans, or as directed by the engineer or the ECS to prevent sediment from exiting the project site or entering state waters. Silt fence shall be maintained and kept in operating conditions per Section 208.

Erosion Logs

Erosion logs are to be used as a perimeter control BMP, as a sediment barrier, and as a slope break as shown on the erosion control plans or in areas as directed by the engineer. They are to be placed prior to any disturbance. They are used to capture and filter sediment-laden run-off from disturbed areas during construction. Erosion logs shall be placed 5' to 10' beyond the toe of slope if possible to provide storage capacity. Erosion logs shall be maintained and kept in operating conditions per Section 208.

Inlet – Erosion Logs shall be placed at existing inlets as shown in the plans and where disturbance may be occurring adjacent to pipe that may cause sediment laden water to enter the pipe. Erosion Logs shall be placed prior to work commencing at these locations to filter sediment-laden runoff. For new culverts and new inlets, Erosion Logs shall be placed once the culvert or inlet is in place to prevent sediment-laden water from entering. BMPs shall be placed at storm drain inlets prior to sweeping operations commencing.

Ditch checks/stabilization of ditches – Erosion Logs shall be placed in areas indicated in the plans or as directed as soon as possible, immediately in most cases after ditch grading has been completed, (a completed ditch is one that is acting as a conduit for water). When checks are used in an existing ditch not to be disturbed, place check prior to work commencing in surrounding areas.

Toes of slopes – Erosion Logs are to be placed prior to work commencing for toes of slope locations and at diversion areas in addition to berms, as needed. Erosion Logs shall be placed on the contour with ends of logs j-hooked to prevent water from running around the ends causing erosion.

Inlet and Outlet Protection

Inlets are to be protected from sediment that may concentrate at them. Storm drain inlet protection shall be placed at existing inlets as shown on the plans, and at new inlets. Inlet and outlet protection shall be installed prior to construction for existing inlets and outlets, and immediately after installation for new inlets and outlets. Outlets shall have BMPs placed to collect sediment prior it's being released off the site. Riprap erosion protection shall be placed at pipe outlets to provide permanent protection. Inlet and outlet protection shall be maintained and kept in operating conditions per Section 208.

Gravel Bags

Gravel Bags are to be used in the gutter pans along the flow line and up-stream of storm drain inlets to capture sediment laden water or other pollutants from saw cutting, metal grinding, or other work. Gravel bags shall be installed prior to work commencing and shall be removed once work at the site is complete. Gravel bags shall be maintained and kept in operating condition at all times per Section 208.

Concrete Washout Structure

Concrete Washout Structures are to be used as a storage area to collect concrete debris from concrete mixers washing out their chutes and preventing this debris from contaminating waterways. Install prior to any concrete or grouting work. The location shall be approved by the Engineer. Concrete washout structures shall be maintained and kept in operating condition per Section 208.

.

Stabilized Construction Entrance

Stabilized Construction Entrances are to be used to prevent/minimize sediment tracking when vehicles exit onto roadway areas. Ensure that all access to project work is limited to these entrance points. Install prior to any clearing & grubbing. Stabilized construction entrances shall be maintained and kept in operating condition per Section 208.

NON-STRUCTURAL BMP PRACTICES FOR EROSION AND SEDIMENT CONTROL

Practices may include, but are not limited to:

BMP	Type of Control	BMP as Designed	In Use on Site	First Construction Activities	During Construction	Interim/Final Stabilization
Surface Roughening/Grading Techniques	Erosion	X			X	
Seeding Permanent	Erosion	X			X	X
Seeding Temporary	Erosion	X			X	
Mulch (Weed Free Straw)/Mulch Tackifier	Erosion	X			X	X
Soil Binder	Erosion	X			X	X
Soil Retention Blanket	Erosion	X			X	X
Vegetative Buffer Strips	Erosion	X		X	X	X
Protection Of Wetlands, Mature Trees & Vegetation	Erosion	X		X	X	X
Flexible Growth Medium	Erosion	X			X	
Landforms	Erosion	X		X	X	X

- Erosion control devices are used to limit the amount of erosion on site.
- Sediment control devices are designed to capture sediment on the project site,
- Construction control are BMPs related to construction access and staging.
- BMP locations are indicated on the Grading and Erosion Control Plans.
- BMP installation details and general narratives are in the SWMP notebook.

Surface Roughening/Grading Techniques

Surface Roughening/Grading Techniques are to be used on all disturbed areas to limit erosion and encourage infiltration of stormwaters. It shall be done immediately after grading operations have been completed or at the end of each working day. The surface roughening and grading techniques shall be parallel to the length of the slope, and shall be approved by the Engineer.

Seeding, Permanent

Seeding is used to control runoff and erosion on disturbed areas. Drill seeding shall occur on slopes flatter than 2:1 and shall occur on the contour of the slope. Completed areas (any portion of a slope that is at final grade) shall be seeded within 48 hours during seeding seasons. Seeded areas shall be inspected frequently for areas of failure. Slopes which are too steep for drill seeding shall have seed broadcast at double the rate and raked into the surface, (see interim and final seeding). Seeding in ditch lines shall follow the contour, drill rows running down a ditch line shall not be allowed.

Seeding, Temporary

Seeding (Temporary) is used to control runoff and erosion on temporarily disturbed areas between construction phases or detour phases. Drill seeding shall occur on slopes flatter than 2:1 and shall occur on the contour of the slope. Completed areas (any portion of a slope that is at desired grade) shall be seeded within 48 hours during seeding seasons. Seeded areas shall be inspected frequently for areas of failure. Slopes which are too steep for drill seeding shall have seed broadcast at double the rate and raked into the surface, (see interim and final seeding). Seeding in ditch lines shall follow the contour, drill rows running down a ditch line shall not be allowed.

Mulch (Weed Free Straw) and Mulch Tackifier

Mulch (Weed Free Straw) and Mulch Tackifier shall be in accordance with subsection 213.03 (a). Mulch (Weed Free Straw) and Mulch Tackifier shall be placed at all areas that are to be seeded. This shall include re-mulching and applying additional tackifier to areas that have been re-disturbed and areas that have eroded since the initial mulching. The Mulch (Weed free Straw) and Mulch Tackifier will protect the seed from the forces of precipitation and wind and allow the seed to germinate. This shall be placed immediately after grading operations have established finished grade and the area will no longer be disturbed. Mulch (Weed Free Straw) and Mulch Tackifier shall not be placed in ditch bottoms where there is a potential for the Mulch (Weed Free Straw) and Mulch Tackifier to exit the project site.

Soil Binder

Soil Binder is a soil conditioner that is to be applied to the temporarily exposed soil areas during detours or construction phasing to reduce erosion. It can be used as a temporary soil stabilizer on disturbed areas or used in conjunction with seeding, mulching, and mulch tackifier to reduce soil loss and encourage vegetation establishment. This shall be placed immediately after temporary grading operations.

Soil Retention Blanket

Soil Retention Blankets shall be placed in areas as shown on the plans or as directed by the engineer. All slopes steeper than a 4:1 shall receive a blanket and ditches that have a grade steeper than 2% shall receive a blanket. Soils shall be properly prepared prior to placing of the blanket. If rills, plant material, rocks, weeds, etc. are present they shall be removed prior to placing blanket to ensure that the blanket is placed on the soil with no tenting; see specifications and M&S standards.

Vegetative Buffer Strips

Existing vegetation shall be used as a BMP on the project. Existing vegetation aids with erosion and sediment control, and protects water quality. Areas of preserved vegetation shall be marked on the grading and erosion control plans. The amount of sediment reaching buffer strips shall be kept to a minimum by placing temporary erosion control features on slopes. If sediment does enter buffer strips and covers existing vegetation it shall be cleaned/re-seeded as directed. Sediment in vegetative ditches shall be avoided to prevent sediment laden water from exiting the project site. All vegetative ditch outfalls (from CDOT right of way) shall be protected with Erosion Logs as shown in the plans or as directed.

Protection of Wetlands, Mature Trees and Vegetation

Prior to construction commencing, orange plastic fence (Fence (Plastic)) shall be placed in combination with an Erosion Log to prevent encroachment of construction traffic and sediment into state waters. Fence (Plastic) shall be placed adjacent to the wetlands, mature trees and vegetation; Erosion Logs shall be placed between the Fence (Plastic) and disturbance area. Erosion Logs shall be placed to direct flows away from or filter water running into wetlands, mature trees and vegetation from disturbance areas. Erosion Logs at these locations shall be trenched into the soil. Sediment in vegetative ditches shall be avoided to prevent sediment laden water from exiting the project site. All vegetative ditch outfalls (from CDOT right of way) shall be protected with Erosion Logs as shown in the plans or as directed.

Landforms

Where indicated in the plans, existing landforms shall be used as a BMP. Landforms prevent sediment from entering onto a site by filtering sediment laden water. When a landform is present, other BMPs may not be necessary. If a landform directs flow of water to a concentrated outfall point, the outfall point shall be protected to prevent erosion. If BMPs are needed at outfall points, the ECS shall add location, type and appropriate narrative to the plans or SWMP notebook.

5. During Construction

Responsibilities of the SWMP administrator/erosion control supervisor during construction.

The SWMP should be considered a "living document" that is continuously reviewed and modified. During construction, the following items shall be added, updated, or amended as needed by the SWMP Administrator/Erosion Control Supervisor (ECS) in accordance with section 208.

A. Materials Handling And Spill Prevention
B. Stockpile Management
C. Grading And Slope Stabilization
D. Surface Roughening
E. Vehicle Tracking
F. Temporary Stabilization
G. Concrete Washout
   1. Concrete washout water or waste from field laboratories and paving equipment shall be contained in accordance with subsection 208.05.
H. Saw Cutting
I. New Inlet/Culvert Protection
J. Street Cleaning

6. Inspections

A. Inspections shall be in accordance with subsection 208.03 (c).

7. BMP Maintenance

A. Maintenance shall be in accordance with subsection 208.04 (e).

8. Record Keeping

A. Records shall be in accordance with subsection 208.03 (c).

9. Interim And Final Stabilization

A. Seeding Plan

Soil preparation, soil conditioning or topsoil, seeding (native), mulching (weed free), and mulch tackifier will be required for the disturbed area within the right-of-way limits which are not surfaced. The following types and rates shall be used:

COMMON NAME	BOTANICAL NAME	POUNDS PLS/ACRE
Western wheatgrass	*Pascopyrum smithii* "Arriba"	4.0
Sideoats grama	*Bouteloua curtipendula* "Vaughn"	2.0
Needle and thread	*Stipa comata*	3.0
Sand bluestem	*Andropogon hallii* "Elida"	4.0
Blue grama	*Bouteloua gracilis* "Hachita"	1.5
Little bluestem	*Schizachyrium scoparium* "Pastura"	2.0
Sand dropseed	*Sporobolus cryptandrus*	0.7
Prairie sandreed	*Calamovilfa longifolia* "Goshen"	3.0
Prairie coneflower	*Ratibida columnaris*	0.3
Blue flax	*Linum lewisi*	0.5
*Oats	*Avena sativa*	3.0
*In the event of fall seeding, substitute Oats for Winter Wheat at the same rate.		
	TOTAL	**24**

B. Seeding Application: Drill seed 0.25 inch to 0.5 inch into the soil. In small areas not accessible to a drill, hand broadcast at double the rate and rake 0.25 inch to 0.5 inch into soil.

C. Mulching Application: Apply 1 ½ tons of certified weed free hay per acre mechanically crimped into the soil in combination with an organic mulch tackifier.

D. Special Requirements: Due to high failure rates, hydro mulching and/or hydro seeding will not be allowed.

E. Soil Conditioning And Fertilizer Requirements: Soil conditioner, organic amendment shall be applied to all seeded areas at 3 cy/1000 sf.

F. Blanket Application: On slopes and ditches requiring a blanket, the blanket shall be placed in lieu of mulch and mulch tackifier. See SWMP for blanket locations.

G. Reseeding Operations/Corrective Stabilization
Prior to Final Acceptance.
1. Seeded areas shall be reviewed during the 14 day inspections by the Erosion Control Supervisor for bare soils caused by surface or wind erosion. Bare areas caused by surface or gully erosion, blown away mulch, etc., shall be re-graded, seeded, mulched and have mulch tackifier (or blanket) applied as necessary.
2. Areas where seed has not germinated after one season shall be evaluated by the Engineer and CDOT Landscape Architect. Areas that have not germinated shall have seed, mulch and mulch tackifier (or blanket) applied. Work shall be paid for by the appropriate bid item.
3. The Contractor shall maintain seeding/mulch/tackifier, mow to control weeds or apply herbicide to control weeds in the seeded areas until final acceptance.

10.Prior To Final Acceptance

A. Final acceptance shall be in accordance with subsection 208.061.
B. Native seed areas shall have 80% coverage, 90% grass species and no noxious weeds prior to final project acceptance. Any native seed areas having poor germination (less than 80% coverage) shall be re-seeded until establishment is reached. No bare spots greater that 6'x6' shall be accepted.

11. Tabulation Of Stormwater Quantities

PAY ITEM	DESCRIPTION	UNIT	QUANTITY
203	BLADING	HR	240
203	BACKHOE	HR	240
203	SWEEPING (PICK-UP-BROOM)	HR	240
208	EROSION LOG (12 INCH)	LF	25,650
208	GRAVEL BAG	EA	1,050
208	SILT FENCE	LF	6,893
208	CHECK DAM	EA	60
208	CONCRETE WASHOUT STRUCTURE	EA	9
208	STORM DRAIN INLET PROTECTION	EA	180
208	STABILIZED CONSTRUCTION ENTRANCE	EA	9
208	SEDIMENT REMOVAL AND DISPOSAL (LABOR)	LS	360
208	SEDIMENT REMOVAL AND DISPOSAL (EQUIPMENT)	HR	300
208	EROSION CONTROL SUPERVISOR	HR	480
208	TEMPORARY BERMS	LF	1,050
212	SEEDING (NATIVE)	AC	42
213	MULCHING (WEED FREE STRAW)	AC	42
213	MULCH TACKIFIER	LB	8,400
213	SOIL BINDER	AC	29
216	SOL RETENTION BLANKET (SPECIAL)	SY	9,525
216	SOIL RETENTION BLANKET (STRAW / COCONUT)	SY	19,298
217	HERBICIDE TREATMENT	HR	120
700	EROSION CONTROL	FA	1

All quantities have been increased by 50 percent to account for unforeseen conditions and compliance with section 208.04 or replacement.

1. BMP cleaning and maintenance shall be paid for as 208 Sediment Removal and Disposal (Equipment) (HR) and Sediment Removal and Disposal (Labor) (HR).
2. It is estimated that 9 concrete washout structures will be required on the project.
3. The quantity of seeding (native) shall include soil preparation, soil conditioner, pre-emergent herbicide, and seed applied, completed, and accepted.
4. Stockpiled topsoil and topsoil quantities are shown with the roadway tabulations.

rynal1:36:08 PM K:\08276\16311\Phase 2\Landscape_Environmental\Drawings\16311LAND_ENVI_PH2_SWM_Plan04.dgn
9/27/2010 CDOT-DefaultPrinter_XM.pltcfg *

UTILITY INFORMATION SHOWN IS PLOTTED FROM THE BEST AVAILABLE DATA. THE CONTRACTOR IS RESPONSIBLE FOR MAKING THEIR OWN DETERMINATION AS TO THE TYPE AND LOCATION OF UTILITIES AS MAY BE NECESSARY TO AVOID DAMAGE THERETO. CONTACT THE UTILITY NOTIFICATION CENTER OF COLORADO AT 1-800-922-1987 FOR UTILITY LOCATIONS AT LEAST 72 HOURS PRIOR TO EXCAVATING. CONTRACTOR SHALL COORDINATE WITH UTILITY COMPANY FOR ANY UTILITIES THAT NEED RELOCATING.

RTD LIGHT RAIL
BROADWAY STATION

OFF RAMP TO BROADWAY

EXISTING ROW

610+00

615+00

SB I-25

NB I-25

STORM DRAIN INLET PROTECTION (1 EACH)

I-25 MAINLINE HCL

PROTECT VEGETATION

SILT FENCE (450 LF)

STORM DRAIN INLET PROTECTION (1 EACH)

SILT FENCE (220 LF)

I-25 FRONTAGE ROAD

STORM DRAIN INLET PROTECTION (1 EACH)

MATCHLINE I-25 STA. 619+00

CONSOLIDATED RAILROAD

S. CHEROKEE ST.

STOR. ALL STORAGE

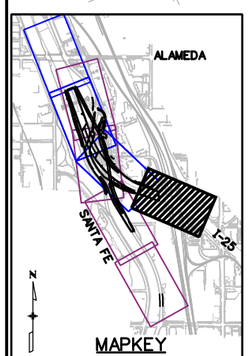

MAPKEY

LEGEND

TOE OF FILL

TOP OF CUT

LIMITS OF DISTURBANCE — LOA —

FLOW DIRECTION

EXISTING WETLANDS

0' 50' 100' 200'

Print Date: 9/27/2010		
File Name: 16311LAND_ENVI_PH2_INI_I-25Plan1.dgn		
Horiz. Scale: 1:100	Vert. Scale: As Noted	
Unit Information	Unit Leader Initials	

FELSBURG HOLT & ULLEVIG 6300 South Syracuse Way Centennial, CO 80111

0000

Sheet Revisions

Date:	Comments	Init.

Colorado Department of Transportation
DEPARTMENT OF TRANSPORTATION
2000 South Holly Street
Denver, CO 80222
Phone: 303-972-9112 FAX: 303-972-9114
Region 6 RLB

As Constructed

No Revisions:	
Revised:	
Void:	

I-25/SANTA FE INTERCHANGE
I-25 INITIAL
GRADING/EROSION CONTROL PLAN

Designer:	ELL	Structure Numbers	
Detailer:	RSA		
Sheet Subset:	EROSION	Subset Sheets:	EI-1 of 7

Project No./Code	IM 0254-394
	16311
Sheet Number	363

rynal 1:36:33 PM K:\08276\16311\Phase 2\Landscape_Environmental\Drawings\16311LAND_ENVI_PH2_INI_I-25Plan1.dgn
9/27/2010 CDOT-DefaultPrinter_XM.pltcfg *

Know what's below. Call before you dig. 811

UTILITY INFORMATION SHOWN IS PLOTTED FROM THE BEST AVAILABLE DATA. THE CONTRACTOR IS RESPONSIBLE FOR MAKING THEIR OWN DETERMINATION AS TO THE TYPE AND LOCATION OF UTILITIES AS MAY BE NECESSARY TO AVOID DAMAGE THERETO. CONTACT THE UTILITY NOTIFICATION CENTER OF COLORADO AT 1-800-922-1987 FOR UTILITY LOCATIONS AT LEAST 72 HOURS PRIOR TO EXCAVATING. CONTRACTOR SHALL COORDINATE WITH UTILITY COMPANY FOR ANY UTILITIES THAT NEED RELOCATING.

PROTECT WETLANDS

PROTECT WATERS OF THE US

STORM DRAIN INLET PROTECTION (1 EACH)

STORM DRAIN INLET PROTECTION (2 EACH)

EROSION LOG (12 INCH) (770 LF)

CONCRETE WASHOUT AREA (1 EACH)

NB SANTA FE

SB SANTA FE

SB I-25

NB I-25

I-25 FRONTAGE ROAD

EXISTING ROW

PROTECT VEGETATION

SILT FENCE (600 LF)

SILT FENCE (625 LF)

EROSION LOG (12 INCH) (1945 LF)

EROSION LOG (12 INCH) (475 LF)

EROSION LOG (12 INCH) (400 LF)

I-25 MAINLINE HCL

MATCHLINE I-25 STA. 619+00

MATCHLINE I-25 STA. 632+00

625+00

626+00

630+00

U.S. WELDING

W. CENTER AVE.

CONCRETE WASHOUT AREA (1 EACH)

ALAMEDA

SANTA FE

I-25

MAPKEY

LEGEND

TOE OF FILL

TOP OF CUT

LIMITS OF DISTURBANCE — LDA —

FLOW DIRECTION

EXISTING WETLANDS

PROPOSED STAGING AREA

0' 50' 100' 200'

Print Date: 9/27/2010	
File Name: 16311LAND_ENVI_PH2_INI_I-25Plan2.dgn	
Horiz. Scale: 1:100	Vert. Scale: As Noted
Unit Information	Unit Leader Initials

FELSBURG HOLT & ULLEVIG 6300 South Syracuse Way Centennial, CO 80111

Sheet Revisions		
Date:	Comments	Init.

Colorado Department of Transportation

DEPARTMENT OF TRANSPORTATION

2000 South Holly Street
Denver, CO 80222
Phone: 303-972-9112 FAX: 303-972-9114

Region 6 RLB

As Constructed

No Revisions:

Revised:

Void:

I-25/SANTA FE INTERCHANGE
I-25 INITIAL
GRADING/EROSION CONTROL PLAN

Designer:	ELL	Structure Numbers	
Detailer:	RSA		
Sheet Subset:	EROSION	Subset Sheets: EI-2 of 7	

Project No./Code

IM 0254-394

16311

Sheet Number 364

rynal i:39:34 PM K:\08276\16311\Phase 2\Landscape_Environmental\Drawings\16311LAND_ENVI_PH2_INI_I-25Plan2.dgn
9/27/2010 CDOT-PDFDraftQuality_XM.pltcfg *

UTILITY INFORMATION SHOWN IS PLOTTED FROM THE BEST AVAILABLE DATA. THE CONTRACTOR IS RESPONSIBLE FOR MAKING THEIR OWN DETERMINATION AS TO THE TYPE AND LOCATION OF UTILITIES AS MAY BE NECESSARY TO AVOID DAMAGE THERETO. CONTACT THE UTILITY NOTIFICATION CENTER OF COLORADO AT 1-800-922-1987 FOR UTILITY LOCATIONS AT LEAST 72 HOURS PRIOR TO EXCAVATING. CONTRACTOR SHALL COORDINATE WITH UTILITY COMPANY FOR ANY UTILITIES THAT NEED RELOCATING.

PROTECT WATERS OF THE US

PROTECT WETLANDS

PROTECT VEGETATION

SOUTH PLATTE RIVER

EXISTING ROW

EROSION LOG (12 INCH) (1350 LF)

STORM DRAIN INLET PROTECTION (1 EACH)

STORM DRAIN INLET PROTECTION (2 EACH)

STORM DRAIN INLET PROTECTION (3 EACH)

EROSION LOG (12 INCH) (210 LF)

EROSION LOG (12 INCH) (870 LF)

EROSION LOG (12 INCH) (730 LF)

EROSION LOG (12 INCH) (530 LF)

EROSION LOG (12 INCH) (90 LF)

EROSION LOG (12 INCH) (700 LF)

I-25 MAINLINE HCL

SB I-25

NB I-25

SB SANTA FE

NB SANTA FE

MATCHLINE I-25 STA. 632+00

MATCHLINE I-25 STA. 645+00

635+00

640+00

STABILIZED CONSTRUCTION ENTRANCE (1 EACH)

CONCRETE WASHOUT AREA (1 EACH)

SILT FENCE (910 LF)

SILT FENCE (370 LF)

LDA

SF

0' 50' 100' 200'

LEGEND

- TOE OF FILL
- TOP OF CUT
- LIMITS OF DISTURBANCE (LDA)
- FLOW DIRECTION
- EXISTING WETLANDS
- PROPOSED STAGING AREA

ALAMEDA

SANTA FE

I-25

MAPKEY

Print Date:	9/27/2010
File Name:	16311LAND_ENVI_PH2_INI_I-25Plan3.dgn
Horiz. Scale:	1:100
Vert. Scale:	As Noted
Unit Information	Unit Leader Initials

FELSBURG HOLT & ULLEVIG
6300 South Syracuse Way
Centennial, CO 80111

Sheet Revisions

Date:	Comments	Init.

Colorado Department of Transportation
DEPARTMENT OF TRANSPORTATION
2000 South Holly Street
Denver, CO 80222
Phone: 303-972-9112 FAX: 303-972-9114
Region 6 RLB

As Constructed

No Revisions:	
Revised:	
Void:	

I-25/SANTA FE INTERCHANGE
I-25 INITIAL
GRADING/EROSION CONTROL PLAN

Designer:	ELL	Structure Numbers	
Detailer:	RSA		
Sheet Subset:	EROSION	Subset Sheets:	EI-3 of 7

Project No./Code
IM 0254-394
16311
Sheet Number 365

rynal1:40:54 PM K:\08276\16311\Phase 2\Landscape_Environmental\Drawings\16311LAND_ENVI_PH2_INI_I-25Plan3.dgn
9/27/2010 CDOT-PDFDraftQuality_XM.pltcfg *

UTILITY INFORMATION SHOWN IS PLOTTED FROM THE BEST AVAILABLE DATA. THE CONTRACTOR IS RESPONSIBLE FOR MAKING THEIR OWN DETERMINATION AS TO THE TYPE AND LOCATION OF UTILITIES AS MAY BE NECESSARY TO AVOID DAMAGE THERETO. CONTACT THE UTILITY NOTIFICATION CENTER OF COLORADO AT 1-800-922-1987 FOR UTILITY LOCATIONS AT LEAST 72 HOURS PRIOR TO EXCAVATING. CONTRACTOR SHALL COORDINATE WITH UTILITY COMPANY FOR ANY UTILITIES THAT NEED RELOCATING.

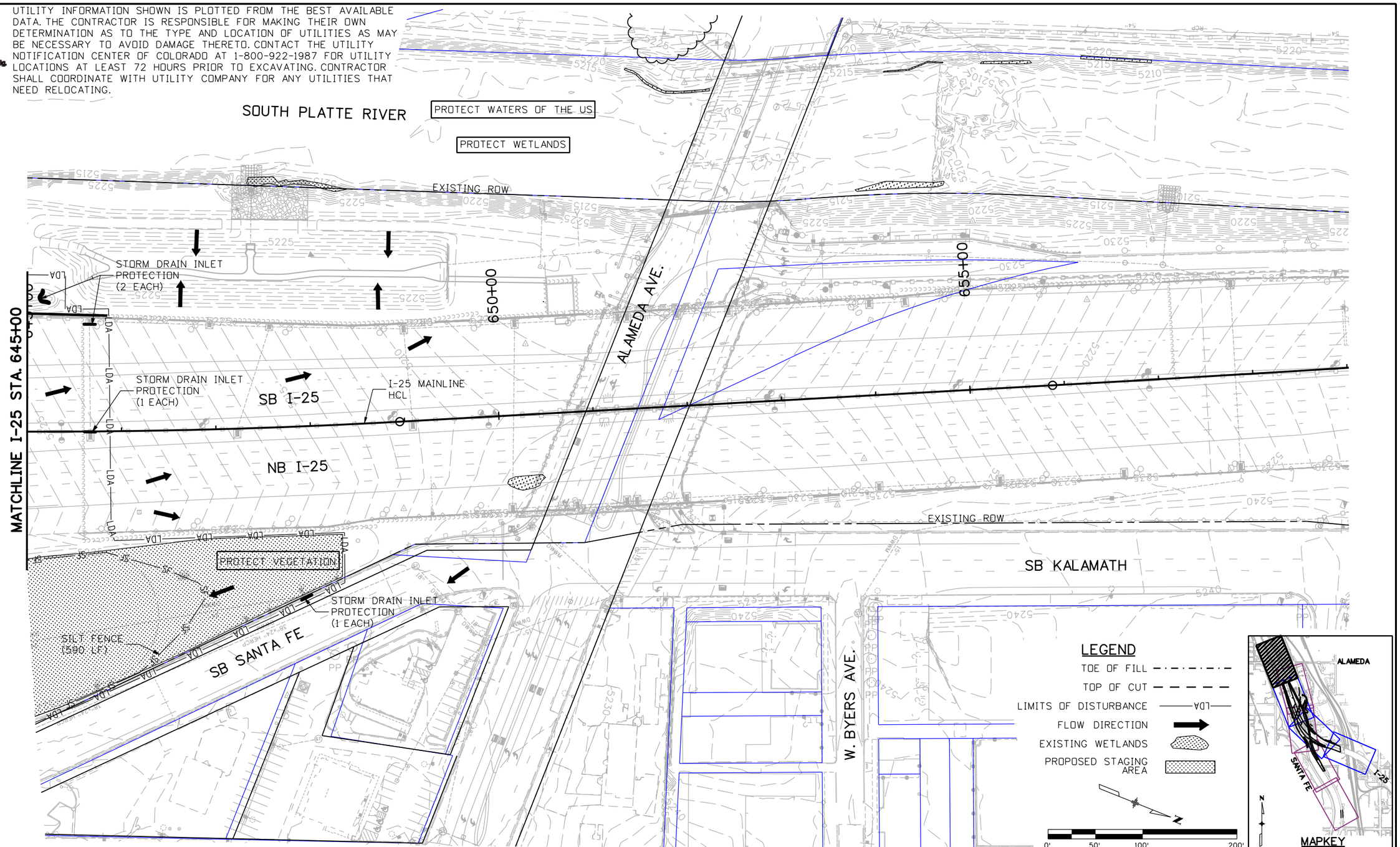

Print Date: 9/27/2010	Sheet Revisions	Colorado Department of Transportation	As Constructed
File Name: 16311LAND_ENVI_PH2_INI_I-25Plan4.dgn	Date: Comments: Init.	2000 South Holly Street, Denver, CO 80222	No Revisions:
Horiz. Scale: 1:100 Vert. Scale: As Noted		Phone: 303-972-9112 FAX: 303-972-9114	Revised:
Unit Information Unit Leader Initials		Region 6 RLB	Void:
FELSBURG HOLT & ULLEVIG 6300 South Syracuse Way Centennial, CO 80111			

I-25/SANTA FE INTERCHANGE I-25 INITIAL GRADING/EROSION CONTROL PLAN			Project No./Code
Designer: ELL	Structure Numbers		IM 0254-394
Detailer: RSA			16311
Sheet Subset: EROSION	Subset Sheets: EI-4 of 7		Sheet Number 366

rynal 1:41:47 PM K:\08276\16311\Phase 2\Landscape_Environmental\Drawings\16311LAND_ENVI_PH2_INI_I-25Plan4.dgn
9/27/2010 CDOT-PDFDraftQuality_XM.pltcfg *

UTILITY INFORMATION SHOWN IS PLOTTED FROM THE BEST AVAILABLE DATA. THE CONTRACTOR IS RESPONSIBLE FOR MAKING THEIR OWN DETERMINATION AS TO THE TYPE AND LOCATION OF UTILITIES AS MAY BE NECESSARY TO AVOID DAMAGE THERETO. CONTACT THE UTILITY NOTIFICATION CENTER OF COLORADO AT 1-800-922-1987 FOR UTILITY LOCATIONS AT LEAST 72 HOURS PRIOR TO EXCAVATING. CONTRACTOR SHALL COORDINATE WITH UTILITY COMPANY FOR ANY UTILITIES THAT NEED RELOCATING.

VANDERBILT PARK

SB SANTA FE

SOUTH PLATTE RIVER

PROTECT WATERS OF THE US

PROTECT WETLANDS

STABILIZED CONSTRUCTION ENTRANCE (1 EACH)

STORM DRAIN INLET PROTECTION (1 EACH)

EROSION LOG (12 INCH) (985 LF)

NB SANTA FE HCL

MATCHLINE NB SANTA FE STA. 708+00

710+00

715+00

720+00

MATCHLINE NB SANTA FE STA. 721+00

NB SANTA FE

CONCRETE WASHOUT AREA (1 EACH)

STORM DRAIN INLET PROTECTION (1 EACH)

EROSION LOG (12 INCH) (SEE SHEET EI-2)

STABILIZED CONSTRUCTION ENTRANCE (1 EACH)

STORM DRAIN INLET PROTECTION (1 EACH)

STORM DRAIN INLET PROTECTION (1 EACH)

STORM DRAIN INLET PROTECTION (SEE SHEET EI-2)

EROSION LOG (12 INCH) (235 LF)

W. OHIO AVE.

SILT FENCE (400 LF)

EXISTING ROW

STORM DRAIN INLET PROTECTION (1 EACH)

PROTECT VEGETATION

LEGEND

TOE OF FILL

TOP OF CUT

LIMITS OF DISTURBANCE LDA

FLOW DIRECTION

EXISTING WETLANDS

PROPOSED STAGING AREA

0' 50' 100' 200'

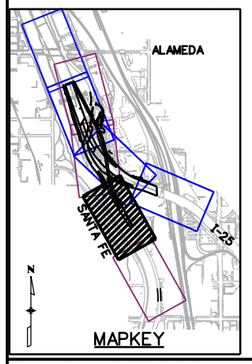

Print Date: 9/27/2010	Sheet Revisions		
File Name: 16311LAND_ENVI_PH2_INI_SantaFePlan2.dgn	Date:	Comments	Init.
Horiz. Scale: 1:100 Vert. Scale: As Noted			
Unit Information Unit Leader Initials			
FELSBURG HOLT & ULLEVIG 6300 South Syracuse Way Centennial, CO 80111			

Colorado Department of Transportation
DEPARTMENT OF TRANSPORTATION
2000 South Holly Street
Denver, CO 80222
Phone: 303-972-9112 FAX: 303-972-9114
Region 6 RLB

As Constructed
No Revisions:
Revised:
Void:

I-25/SANTA FE INTERCHANGE
SANTA FE INITIAL
GRADING/EROSION CONTROL PLAN

Designer: ELL
Detailer: RSA
Sheet Subset: EROSION
Structure Numbers
Subset Sheets: EI-5 of 7

Project No./Code
IM 0254-394
16311
Sheet Number 367

rynal1:42:12 PM K:\08276\16311\Phase 2\Landscape_Environmental\Drawings\16311LAND_ENVI_PH2_INI_SantaFePlan2.dgn
9/27/2010 CDOT-PDFDraftQuality_XM.pltcfg *

UTILITY INFORMATION SHOWN IS PLOTTED FROM THE BEST AVAILABLE DATA. THE CONTRACTOR IS RESPONSIBLE FOR MAKING THEIR OWN DETERMINATION AS TO THE TYPE AND LOCATION OF UTILITIES AS MAY BE NECESSARY TO AVOID DAMAGE THERETO. CONTACT THE UTILITY NOTIFICATION CENTER OF COLORADO AT 1-800-922-1987 FOR UTILITY LOCATIONS AT LEAST 72 HOURS PRIOR TO EXCAVATING. CONTRACTOR SHALL COORDINATE WITH UTILITY COMPANY FOR ANY UTILITIES THAT NEED RELOCATING.

PROTECT WATERS OF THE US

PROTECT WETLANDS

PROTECT VEGETATION

SOUTH PLATTE RIVER

EXISTING ROW

SB I-25

NB I-25

SB SANTA FE

NB SANTA FE

NB SANTA FE HCL

SB SANTA FE HCL

815+00

818+00

825+00

MATCHLINE NB SANTA FE STA. 721+00

MATCHLINE SB SANTA FE STA. 818+62.17

MATCHLINE NB SANTA FE STA. 735+00

SEE SHEETS EI-1 & EI-2 FOR EROSION CONTROL

HOME DEPOT PARKING LOT

LDA

SF

MAPKEY

ALAMEDA

SANTA FE

I-25

LEGEND

TOE OF FILL

TOP OF CUT

LIMITS OF DISTURBANCE

FLOW DIRECTION

EXISTING WETLANDS

PROPOSED STAGING AREA

0' 50' 100' 200'

Print Date: 9/27/2010	Sheet Revisions		
File Name: 16311LAND_ENVI_PH2_INI_SantaFePlan3.dgn	Date:	Comments	Init.
Horiz. Scale: 1:100 Vert. Scale: As Noted			
Unit Information Unit Leader Initials			
FELSBURG HOLT & ULLEVIG 6300 South Syracuse Way Centennial, CO 80111			

Colorado Department of Transportation
DEPARTMENT OF TRANSPORTATION
2000 South Holly Street
Denver, CO 80222
Phone: 303-972-9112 FAX: 303-972-9114
Region 6 RLB

As Constructed
No Revisions:
Revised:
Void:

I-25/SANTA FE INTERCHANGE
SANTA FE INITIAL
GRADING/EROSION CONTROL PLAN

Designer: ELL
Detailer: RSA
Sheet Subset: EROSION
Structure Numbers:
Subset Sheets: EI-6 of 7

Project No./Code
IM 0254-394
16311
Sheet Number 368

rynal 1:42:33 PM K:\08276\16311\Phase 2\Landscape_Environmental\Drawings\16311LAND_ENVI_PH2_INI_SantaFePlan3.dgn
9/27/2010 CDOT-PDFDraftQuality_XM.pltcfg *

Know what's below. Call before you dig.

UTILITY INFORMATION SHOWN IS PLOTTED FROM THE BEST AVAILABLE DATA. THE CONTRACTOR IS RESPONSIBLE FOR MAKING THEIR OWN DETERMINATION AS TO THE TYPE AND LOCATION OF UTILITIES AS MAY BE NECESSARY TO AVOID DAMAGE THERETO. CONTACT THE UTILITY NOTIFICATION CENTER OF COLORADO AT 1-800-922-1987 FOR UTILITY LOCATIONS AT LEAST 72 HOURS PRIOR TO EXCAVATING. CONTRACTOR SHALL COORDINATE WITH UTILITY COMPANY FOR ANY UTILITIES THAT NEED RELOCATING.

SEE SHEETS EI-3 & EI-4 FOR EROSION CONTROL

SB I-25

NB I-25

MATCHLINE SB SANTA FE STA. 818+62.17

MATCHLINE NB SANTA FE STA. 735+00

820+00

825+00

830+00

745+00

SB SANTA FE

NB SANTA FE

SB SANTA FE HCL

NB SANTA FE HCL

EXISTING ROW

ALAMEDA STATION DEVELOPMENT

LEGEND

TOE OF FILL

TOP OF CUT

LIMITS OF DISTURBANCE LDA

FLOW DIRECTION

EXISTING WETLANDS

PROPOSED STAGING AREA

0' 50' 100' 200'

ALAMEDA

SANTA FE

I-25

MAPKEY

rynal 1:42:51 PM K:\08276\16311\Phase 2\Landscape_Environmental\Drawings\16311LAND_ENVI_PH2_INI_SantaFePlan4.dgn
9/27/2010 CDOT-PDFDraftQuality_XM.pltcfg *

Print Date: 9/27/2010	Sheet Revisions	Colorado Department of Transportation	As Constructed
File Name: 16311LAND_ENVI_PH2_INI_SantaFePlan4.dgn	Date: Comments Init.	2000 South Holly Street, Denver, CO 80222	No Revisions:
Horiz. Scale: 1:100 Vert. Scale: As Noted		Phone: 303-972-9112 FAX: 303-972-9114	Revised:
Unit Information Unit Leader Initials		Region 6 RLB	Void:
FELSBURG HOLT & ULLEVIG 6300 South Syracuse Way Centennial, CO 80111			

I-25/SANTA FE INTERCHANGE SANTA FE INITIAL GRADING/EROSION CONTROL PLAN			Project No./Code
Designer: ELL	Structure Numbers		IM 0254-394
Detailer: RSA			16311
Sheet Subset: EROSION	Subset Sheets: EI-7 of 7		Sheet Number 369

UTILITY INFORMATION SHOWN IS PLOTTED FROM THE BEST AVAILABLE DATA. THE CONTRACTOR IS RESPONSIBLE FOR MAKING THEIR OWN DETERMINATION AS TO THE TYPE AND LOCATION OF UTILITIES AS MAY BE NECESSARY TO AVOID DAMAGE THERETO. CONTACT THE UTILITY NOTIFICATION CENTER OF COLORADO AT 1-800-922-1987 FOR UTILITY LOCATIONS AT LEAST 72 HOURS PRIOR TO EXCAVATING. CONTRACTOR SHALL COORDINATE WITH UTILITY COMPANY FOR ANY UTILITIES THAT NEED RELOCATING.

RTD LIGHT RAIL
BROADWAY STATION

OFF RAMP TO BROADWAY

EXISTING ROW

610+00

615+00

619+00

SB I-25

NB I-25

MAINTAIN

I-25 MAINLINE
HCL

EXISTING ROW

*MAINTAIN

*MAINTAIN

STORM DRAIN INLET
PROTECTION
(1 EACH)

MAINTAIN

I-25 FRONTAGE ROAD

EXISTING ROW

STORM DRAIN INLET
PROTECTION
(1 EACH)

*MAINTAIN

MATCHLINE I-25 STA. 619+00

CONSOLIDATED RAILROAD

S. CHEROKEE ST.

STOR. ALL STORAGE

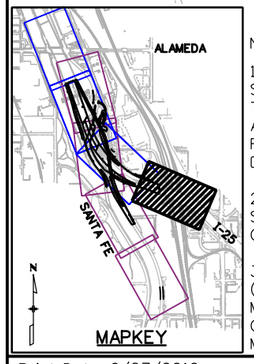

MAPKEY

NOTES:

1. SEEDING (NATIVE), MULCHING (WEED FREE) AND MULCH TACKIFIER SHALL BE REQUIRED FOR ALL OF THE DISTURBED AREAS WITHIN THE PROJECT AREA WHICH ARE NOT TO BE PAVED. ADDITIONAL APPLICATIONS OF THOSE ITEMS MAY BE REQUIRED DUE TO RE-MOBILIZATIONS, SITE CONDITIONS, OR EROSION DUE TO RUNOFF OR CONSTRUCTION.

2. THE QUANTITY OF SEEDING (NATIVE) SHALL INCLUDE SOIL PREPARATION, SOIL CONDITIONER, PRE-EMERGENT HERBICIDE, AND SEED APPLIED, COMPLETED, AND ACCEPTED.

3. INSTALL NEW EROSION/SEDIMENT CONTROLS BEST MANAGEMENT PRACTICES (BMP'S) AS NEW AREAS ARE UNDERGOING CONSTRUCTION AS NEEDED. REPAIR, MAINTAIN, AND REPLACE EXISTING BMP'S AS NEEDED. PERMANENTLY STABILIZE COMPLETED AREAS WITH SEEDING (NATIVE), MULCHING (WEED FREE HAY), AND MULCH TACKIFIER..

LEGEND

TOE OF FILL
TOP OF CUT
LIMITS OF DISTURBANCE — LOA —
FLOW DIRECTION
EXISTING WETLANDS

* MAINTAIN ALL INITIAL EROSION CONTROL FACILITIES AS NEEDED DURING VARIOUS CONSTRUCTION PHASES.

0' 50' 100' 200'

Print Date: 9/27/2010	
File Name: 16311LAND_ENVI_PH2_INT_I-25Plan1.dgn	
Horiz. Scale: 1:100	Vert. Scale: As Noted
Unit Information	Unit Leader Initials

FELSBURG HOLT & ULLEVIG 6300 South Syracuse Way Centennial, CO 80111

Sheet Revisions		
Date:	Comments	Init.

Colorado Department of Transportation
DEPARTMENT OF TRANSPORTATION
2000 South Holly Street
Denver, CO 80222
Phone: 303-972-9112 FAX: 303-972-9114
Region 6 RLB

As Constructed
No Revisions:
Revised:
Void:

I-25/SANTA FE INTERCHANGE
I-25 INTERIM
GRADING/EROSION CONTROL PLAN

Designer:	ELL	Structure Numbers	
Detailer:	RSA		
Sheet Subset:	EROSION	Subset Sheets:	EN-1 of 7

Project No./Code
IM 0254-394
16311
Sheet Number 370

rynal1:43:16 PM K:\08276\16311\Phase 2\Landscape_Environmental\Drawings\16311LAND_ENVI_PH2_INT_I-25Plan1.dgn
9/27/2010 CDOT-PDFDraftQuality_XM.pltcfg *

UTILITY INFORMATION SHOWN IS PLOTTED FROM THE BEST AVAILABLE DATA. THE CONTRACTOR IS RESPONSIBLE FOR MAKING THEIR OWN DETERMINATION AS TO THE TYPE AND LOCATION OF UTILITIES AS MAY BE NECESSARY TO AVOID DAMAGE THERETO. CONTACT THE UTILITY NOTIFICATION CENTER OF COLORADO AT 1-800-922-1987 FOR UTILITY LOCATIONS AT LEAST 72 HOURS PRIOR TO EXCAVATING. CONTRACTOR SHALL COORDINATE WITH UTILITY COMPANY FOR ANY UTILITIES THAT NEED RELOCATING.

PROTECT WETLANDS

PROTECT WATERS OF THE US

NB SANTA FE

SB SANTA FE

RAMP 1

RAMP 2

RAMP 3

RAMP 4

NB/SB SANTA FE

SB I-25

NB I-25

I-25 FRONTAGE ROAD

W. CENTER AVE.

U.S. WELDING

MATCHLINE I-25 STA. 619+00

MATCHLINE I-25 STA. 632+00

EROSION LOG (12 INCH) (500 LF)

EROSION LOG (12 INCH) (400 LF)

EROSION LOG (12 INCH) (300 LF)

EROSION LOG (12 INCH) (100 LF)

EROSION LOG (12 INCH) (100 LF)

EROSION LOG (12 INCH) (120 LF)

EROSION LOG (12 INCH) (250 LF)

STORM DRAIN INLET PROTECTION (2 EACH)

STORM DRAIN INLET PROTECTION (1 EACH)

STORM DRAIN INLET PROTECTION (8 EACH)

STORM DRAIN INLET PROTECTION (2 EACH)

STORM DRAIN INLET PROTECTION (1 EACH)

STORM DRAIN INLET PROTECTION (2 EACH)

STORM DRAIN INLET PROTECTION (2 EACH)

CHECK DAM (2 EACH)

CHECK DAM (2 EACH)

CHECK DAM (1 EACH)

CHECK DAM (1 EACH)

CHECK DAM (2 EACH)

CHECK DAM (3 EACH)

I-25 MAINLINE HCL

EXISTING ROW

*MAINTAIN

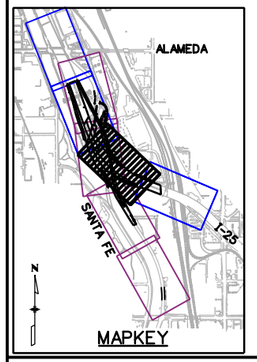

NOTES:

1. SEEDING (NATIVE), MULCHING (WEED FREE) AND MULCH TACKIFIER SHALL BE REQUIRED FOR ALL OF THE DISTURBED AREAS WITHIN THE PROJECT AREA WHICH ARE NOT TO BE PAVED. ADDITIONAL APPLICATIONS OF THOSE ITEMS MAY BE REQUIRED DUE TO RE-MOBILIZATIONS, SITE CONDITIONS, OR EROSION DUE TO RUNOFF OR CONSTRUCTION.

2. THE QUANTITY OF SEEDING (NATIVE) SHALL INCLUDE SOIL PREPARATION, SOIL CONDITIONER, PRE-EMERGENT HERBICIDE, AND SEED APPLIED, COMPLETED, AND ACCEPTED.

3. INSTALL NEW EROSION/SEDIMENT CONTROLS BEST MANAGEMENT PRACTICES (BMP'S) AS NEW AREAS ARE UNDERGOING CONSTRUCTION AS NEEDED. REPAIR, MAINTAIN, AND REPLACE EXISTING BMP'S AS NEEDED. PERMANENTLY STABILIZE COMPLETED AREAS WITH SEEDING (NATIVE), MULCHING (WEED FREE HAY), AND MULCH TACKIFIER..

LEGEND

- TOE OF FILL
- TOP OF CUT
- LIMITS OF DISTURBANCE (LOD)
- FLOW DIRECTION
- EXISTING WETLANDS
- PROPOSED STAGING AREA

* MAINTAIN ALL INITIAL EROSION CONTROL FACILITIES AS NEEDED DURING VARIOUS CONSTRUCTION PHASES.

0' 50' 100' 200'

Print Date: 9/27/2010	Sheet Revisions	Colorado Department of Transportation	As Constructed
File Name: 16311LAND_ENVI_PH2_INT_I-25Plan2.dgn	Date: Comments: Init.	2000 South Holly Street, Denver, CO 80222	No Revisions:
Horiz. Scale: 1:100 Vert. Scale: As Noted		Phone: 303-972-9112 FAX: 303-972-9114	Revised:
Unit Information Unit Leader Initials		Region 6 RLB	Void:
FELSBURG HOLT & ULLEVIG 6300 South Syracuse Way Centennial, CO 80111			

I-25/SANTA FE INTERCHANGE
I-25 INTERIM
GRADING/EROSION CONTROL PLAN

Designer:	ELL	Structure Numbers	
Detailer:	RSA		
Sheet Subset:	EROSION	Subset Sheets: EN-2 of 7	

Project No./Code: IM 0254-394

16311

Sheet Number 371

Know what's below. Call before you dig. 811

rynal1:43:33 PM K:\08276\16311\Phase 2\Landscape_Environmental\Drawings\16311LAND_ENVI_PH2_INT_I-25Plan2.dgn
9/27/2010 CDOT-PDFDraftQuality_XM.pltcfg *

UTILITY INFORMATION SHOWN IS PLOTTED FROM THE BEST AVAILABLE DATA. THE CONTRACTOR IS RESPONSIBLE FOR MAKING THEIR OWN DETERMINATION AS TO THE TYPE AND LOCATION OF UTILITIES AS MAY BE NECESSARY TO AVOID DAMAGE THERETO. CONTACT THE UTILITY NOTIFICATION CENTER OF COLORADO AT 1-800-922-1987 FOR UTILITY LOCATIONS AT LEAST 72 HOURS PRIOR TO EXCAVATING. CONTRACTOR SHALL COORDINATE WITH UTILITY COMPANY FOR ANY UTILITIES THAT NEED RELOCATING.

NOTES:

1. SEEDING (NATIVE), MULCHING (WEED FREE) AND MULCH TACKIFIER SHALL BE REQUIRED FOR ALL OF THE DISTURBED AREAS WITHIN THE PROJECT AREA WHICH ARE NOT TO BE PAVED. ADDITIONAL APPLICATIONS OF THOSE ITEMS MAY BE REQUIRED DUE TO RE-MOBILIZATIONS, SITE CONDITIONS, OR EROSION DUE TO RUNOFF OR CONSTRUCTION.

2. THE QUANTITY OF SEEDING (NATIVE) SHALL INCLUDE SOIL PREPARATION, SOIL CONDITIONER, PRE-EMERGENT HERBICIDE, AND SEED APPLIED, COMPLETED, AND ACCEPTED.

3. INSTALL NEW EROSION/SEDIMENT CONTROLS BEST MANAGEMENT PRACTICES (BMP'S) AS NEW AREAS ARE UNDERGOING CONSTRUCTION AS NEEDED. REPAIR, MAINTAIN, AND REPLACE EXISTING BMP'S AS NEEDED. PERMANENTLY STABILIZE COMPLETED AREAS WITH SEEDING (NATIVE), MULCHING (WEED FREE HAY), AND MULCH TACKIFIER..

* MAINTAIN ALL INITIAL EROSION CONTROL FACILITIES AS NEEDED DURING VARIOUS CONSTRUCTION PHASES.

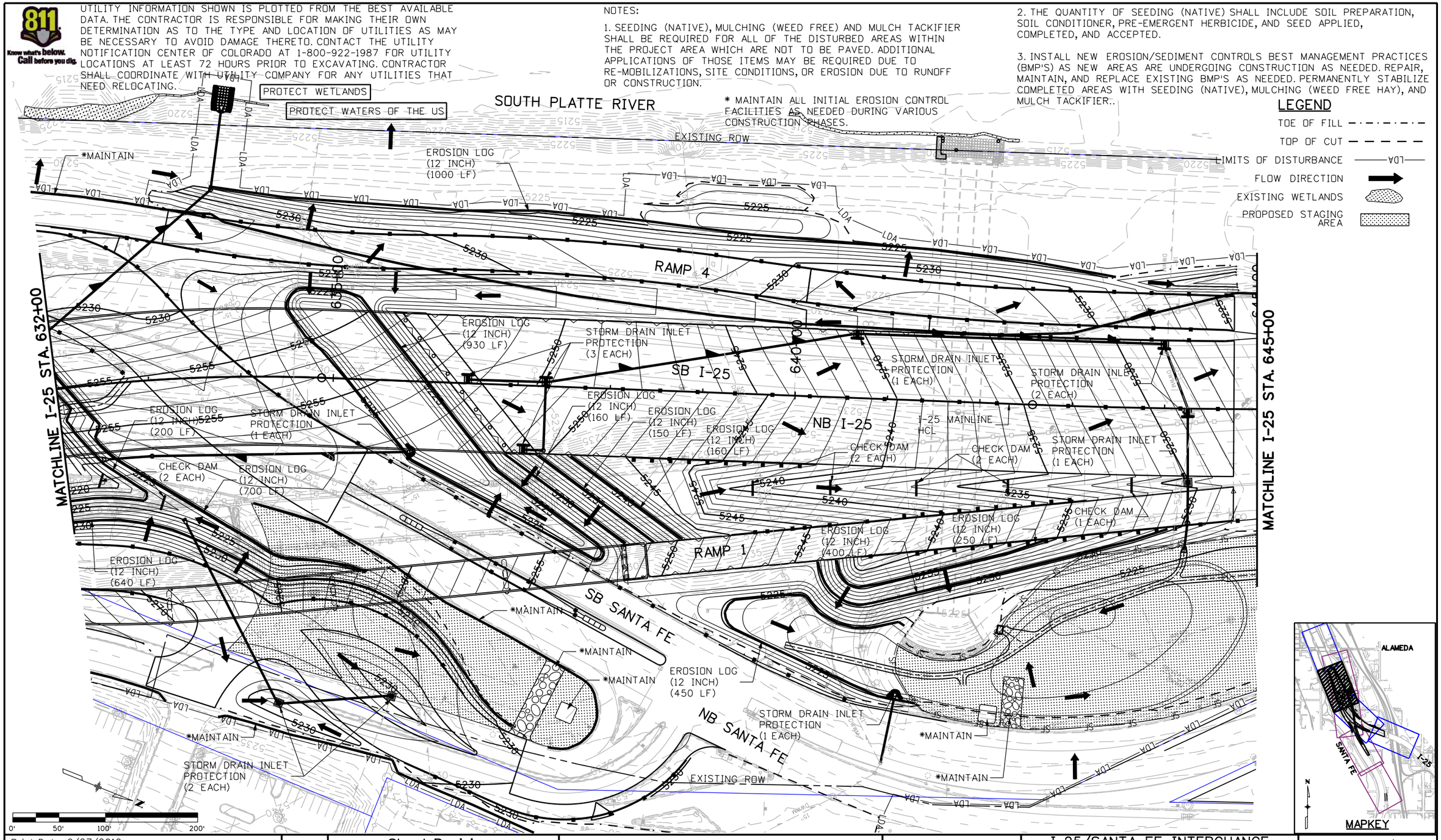

LEGEND

- TOE OF FILL
- TOP OF CUT
- LIMITS OF DISTURBANCE — LDA —
- FLOW DIRECTION
- EXISTING WETLANDS
- PROPOSED STAGING AREA

MAPKEY

Print Date: 9/27/2010	Sheet Revisions		
File Name: 16311LAND_ENVI_PH2_INT_I-25Plan3.dgn	Date:	Comments	Init.
Horiz. Scale: 1:100 Vert. Scale: As Noted			
Unit Information Unit Leader Initials			
FELSBURG HOLT & ULLEVIG 6300 South Syracuse Way Centennial, CO 80111			

Colorado Department of Transportation
DOT DEPARTMENT OF TRANSPORTATION
2000 South Holly Street
Denver, CO 80222
Phone: 303-972-9112 FAX: 303-972-9114
Region 6 RLB

As Constructed
No Revisions:
Revised:
Void:

I-25/SANTA FE INTERCHANGE
I-25 INTERIM
GRADING/EROSION CONTROL PLAN

Designer:	ELL	Structure Numbers	
Detailer:	RSA		
Sheet Subset:	EROSION	Subset Sheets: EN-3 of 7	

Project No./Code
IM 0254-394
16311
Sheet Number 372

rynal 1:43:54 PM K:\08276\16311\Phase 2\Landscape_Environmental\Drawings\16311LAND_ENVI_PH2_INT_I-25Plan3.dgn
9/27/2010 CDOT-PDFDraftQuality_XM.pltcfg *

UTILITY INFORMATION SHOWN IS PLOTTED FROM THE BEST AVAILABLE DATA. THE CONTRACTOR IS RESPONSIBLE FOR MAKING THEIR OWN DETERMINATION AS TO THE TYPE AND LOCATION OF UTILITIES AS MAY BE NECESSARY TO AVOID DAMAGE THERETO. CONTACT THE UTILITY NOTIFICATION CENTER OF COLORADO AT 1-800-922-1987 FOR UTILITY LOCATIONS AT LEAST 72 HOURS PRIOR TO EXCAVATING. CONTRACTOR SHALL COORDINATE WITH UTILITY COMPANY FOR ANY UTILITIES THAT NEED RELOCATING.

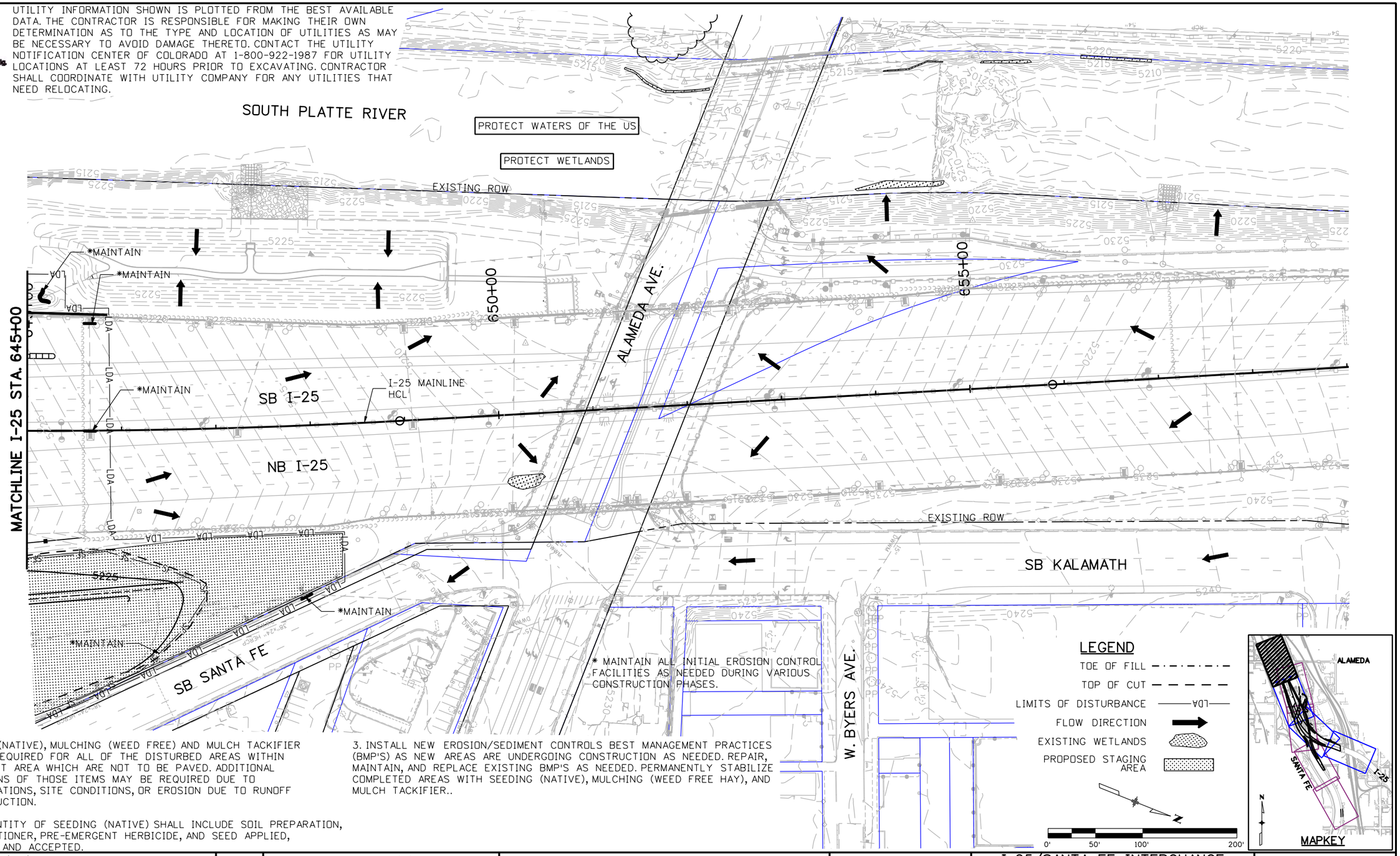

NOTES:

1. SEEDING (NATIVE), MULCHING (WEED FREE) AND MULCH TACKIFIER SHALL BE REQUIRED FOR ALL OF THE DISTURBED AREAS WITHIN THE PROJECT AREA WHICH ARE NOT TO BE PAVED. ADDITIONAL APPLICATIONS OF THOSE ITEMS MAY BE REQUIRED DUE TO RE-MOBILIZATIONS, SITE CONDITIONS, OR EROSION DUE TO RUNOFF OR CONSTRUCTION.

2. THE QUANTITY OF SEEDING (NATIVE) SHALL INCLUDE SOIL PREPARATION, SOIL CONDITIONER, PRE-EMERGENT HERBICIDE, AND SEED APPLIED, COMPLETED, AND ACCEPTED.

3. INSTALL NEW EROSION/SEDIMENT CONTROLS BEST MANAGEMENT PRACTICES (BMP'S) AS NEW AREAS ARE UNDERGOING CONSTRUCTION AS NEEDED. REPAIR, MAINTAIN, AND REPLACE EXISTING BMP'S AS NEEDED. PERMANENTLY STABILIZE COMPLETED AREAS WITH SEEDING (NATIVE), MULCHING (WEED FREE HAY), AND MULCH TACKIFIER..

Print Date: 9/27/2010	Sheet Revisions		
File Name: 16311LAND_ENVI_PH2_INT_I-25Plan4.dgn	Date:	Comments	Init.
Horiz. Scale: 1:100 Vert. Scale: As Noted			
Unit Information Unit Leader Initials			
FELSBURG HOLT & ULLEVIG 6300 South Syracuse Way Centennial, CO 80111			

Colorado Department of Transportation
DEPARTMENT OF TRANSPORTATION
2000 South Holly Street
Denver, CO 80222
Phone: 303-972-9112 FAX: 303-972-9114
Region 6 RLB

As Constructed
No Revisions:
Revised:
Void:

I-25/SANTA FE INTERCHANGE
I-25 INTERIM
GRADING/EROSION CONTROL PLAN

Designer:	ELL	Structure Numbers	
Detailer:	RSA		
Sheet Subset:	EROSION	Subset Sheets: EN-4 of 7	

Project No./Code
IM 0254-394
16311
Sheet Number 373

rynal1:44:18 PM K:\08276\16311\Phase 2\Landscape_Environmental\Drawings\16311LAND_ENVI_PH2_INT_I-25Plan4.dgn
9/27/2010 CDOT-PDFDraftQuality_XM.pltcfg *

UTILITY INFORMATION SHOWN IS PLOTTED FROM THE BEST AVAILABLE DATA. THE CONTRACTOR IS RESPONSIBLE FOR MAKING THEIR OWN DETERMINATION AS TO THE TYPE AND LOCATION OF UTILITIES AS MAY BE NECESSARY TO AVOID DAMAGE THERETO. CONTACT THE UTILITY NOTIFICATION CENTER OF COLORADO AT 1-800-922-1987 FOR UTILITY LOCATIONS AT LEAST 72 HOURS PRIOR TO EXCAVATING. CONTRACTOR SHALL COORDINATE WITH UTILITY COMPANY FOR ANY UTILITIES THAT NEED RELOCATING.

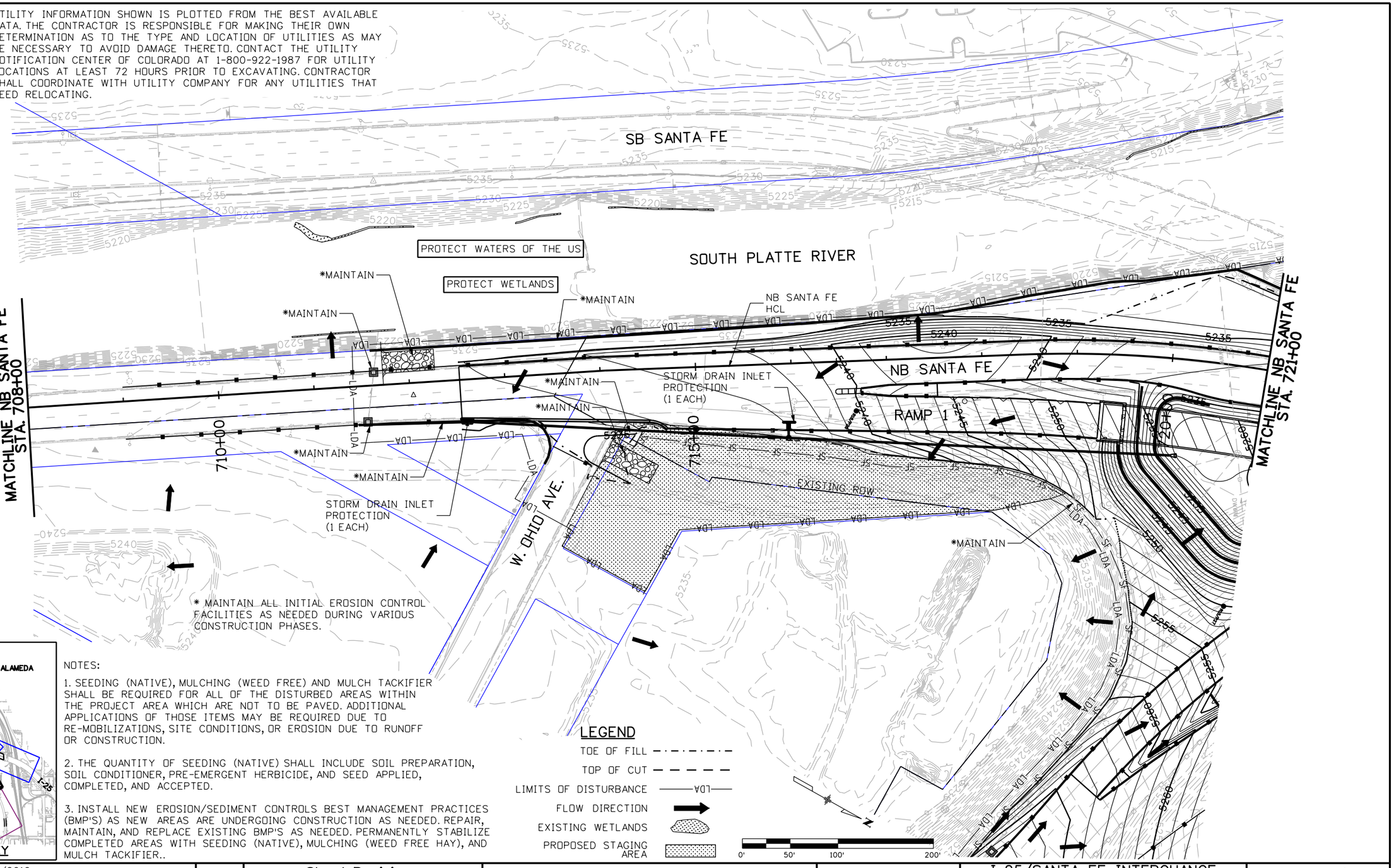

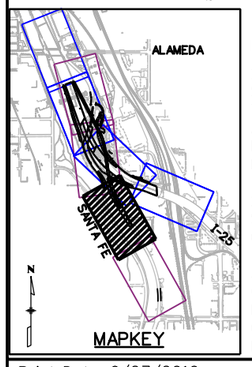

NOTES:

1. SEEDING (NATIVE), MULCHING (WEED FREE) AND MULCH TACKIFIER SHALL BE REQUIRED FOR ALL OF THE DISTURBED AREAS WITHIN THE PROJECT AREA WHICH ARE NOT TO BE PAVED. ADDITIONAL APPLICATIONS OF THOSE ITEMS MAY BE REQUIRED DUE TO RE-MOBILIZATIONS, SITE CONDITIONS, OR EROSION DUE TO RUNOFF OR CONSTRUCTION.

2. THE QUANTITY OF SEEDING (NATIVE) SHALL INCLUDE SOIL PREPARATION, SOIL CONDITIONER, PRE-EMERGENT HERBICIDE, AND SEED APPLIED, COMPLETED, AND ACCEPTED.

3. INSTALL NEW EROSION/SEDIMENT CONTROLS BEST MANAGEMENT PRACTICES (BMP'S) AS NEW AREAS ARE UNDERGOING CONSTRUCTION AS NEEDED. REPAIR, MAINTAIN, AND REPLACE EXISTING BMP'S AS NEEDED. PERMANENTLY STABILIZE COMPLETED AREAS WITH SEEDING (NATIVE), MULCHING (WEED FREE HAY), AND MULCH TACKIFIER..

* MAINTAIN ALL INITIAL EROSION CONTROL FACILITIES AS NEEDED DURING VARIOUS CONSTRUCTION PHASES.

LEGEND

- TOE OF FILL
- TOP OF CUT
- LIMITS OF DISTURBANCE (LDA)
- FLOW DIRECTION
- EXISTING WETLANDS
- PROPOSED STAGING AREA

0' 50' 100' 200'

Print Date: 9/27/2010
File Name: 16311LAND_ENVI_PH2_INT_SantaFePlan2.dgn
Horiz. Scale: 1:100 Vert. Scale: As Noted
Unit Information Unit Leader Initials

FELSBURG HOLT & ULLEVIG 6300 South Syracuse Way Centennial, CO 80111

Sheet Revisions		
Date:	Comments	Init.

Colorado Department of Transportation
2000 South Holly Street
Denver, CO 80222
Phone: 303-972-9112 FAX: 303-972-9114
Region 6 RLB

As Constructed
No Revisions:
Revised:
Void:

I-25/SANTA FE INTERCHANGE
SANTA FE INTERIM
GRADING/EROSION CONTROL PLAN

Designer: ELL
Detailer: RSA
Sheet Subset: EROSION
Structure Numbers:
Subset Sheets: EN-5 of 7

Project No./Code
IM 0254-394
16311
Sheet Number 374

rynal1:44:40 PM K:\08276\16311\Phase 2\Landscape_Environmental\Drawings\16311LAND_ENVI_PH2_INT_SantaFePlan2.dgn
9/27/2010 CDOT-PDFDraftQuality_XM.pltcfg *

UTILITY INFORMATION SHOWN IS PLOTTED FROM THE BEST AVAILABLE DATA. THE CONTRACTOR IS RESPONSIBLE FOR MAKING THEIR OWN DETERMINATION AS TO THE TYPE AND LOCATION OF UTILITIES AS MAY BE NECESSARY TO AVOID DAMAGE THERETO. CONTACT THE UTILITY NOTIFICATION CENTER OF COLORADO AT 1-800-922-1987 FOR UTILITY LOCATIONS AT LEAST 72 HOURS PRIOR TO EXCAVATING. CONTRACTOR SHALL COORDINATE WITH UTILITY COMPANY FOR ANY UTILITIES THAT NEED RELOCATING.

NOTES:

1. SEEDING (NATIVE), MULCHING (WEED FREE) AND MULCH TACKIFIER SHALL BE REQUIRED FOR ALL OF THE DISTURBED AREAS WITHIN THE PROJECT AREA WHICH ARE NOT TO BE PAVED. ADDITIONAL APPLICATIONS OF THOSE ITEMS MAY BE REQUIRED DUE TO RE-MOBILIZATIONS, SITE CONDITIONS, OR EROSION DUE TO RUNOFF OR CONSTRUCTION.

2. THE QUANTITY OF SEEDING (NATIVE) SHALL INCLUDE SOIL PREPARATION, SOIL CONDITIONER, PRE-EMERGENT HERBICIDE, AND SEED APPLIED, COMPLETED, AND ACCEPTED.

3. INSTALL NEW EROSION/SEDIMENT CONTROLS BEST MANAGEMENT PRACTICES (BMP'S) AS NEW AREAS ARE UNDERGOING CONSTRUCTION AS NEEDED. REPAIR, MAINTAIN, AND REPLACE EXISTING BMP'S AS NEEDED. PERMANENTLY STABILIZE COMPLETED AREAS WITH SEEDING (NATIVE), MULCHING (WEED FREE HAY), AND MULCH TACKIFIER.

* MAINTAIN ALL INITIAL EROSION CONTROL FACILITIES AS NEEDED DURING VARIOUS CONSTRUCTION PHASES.

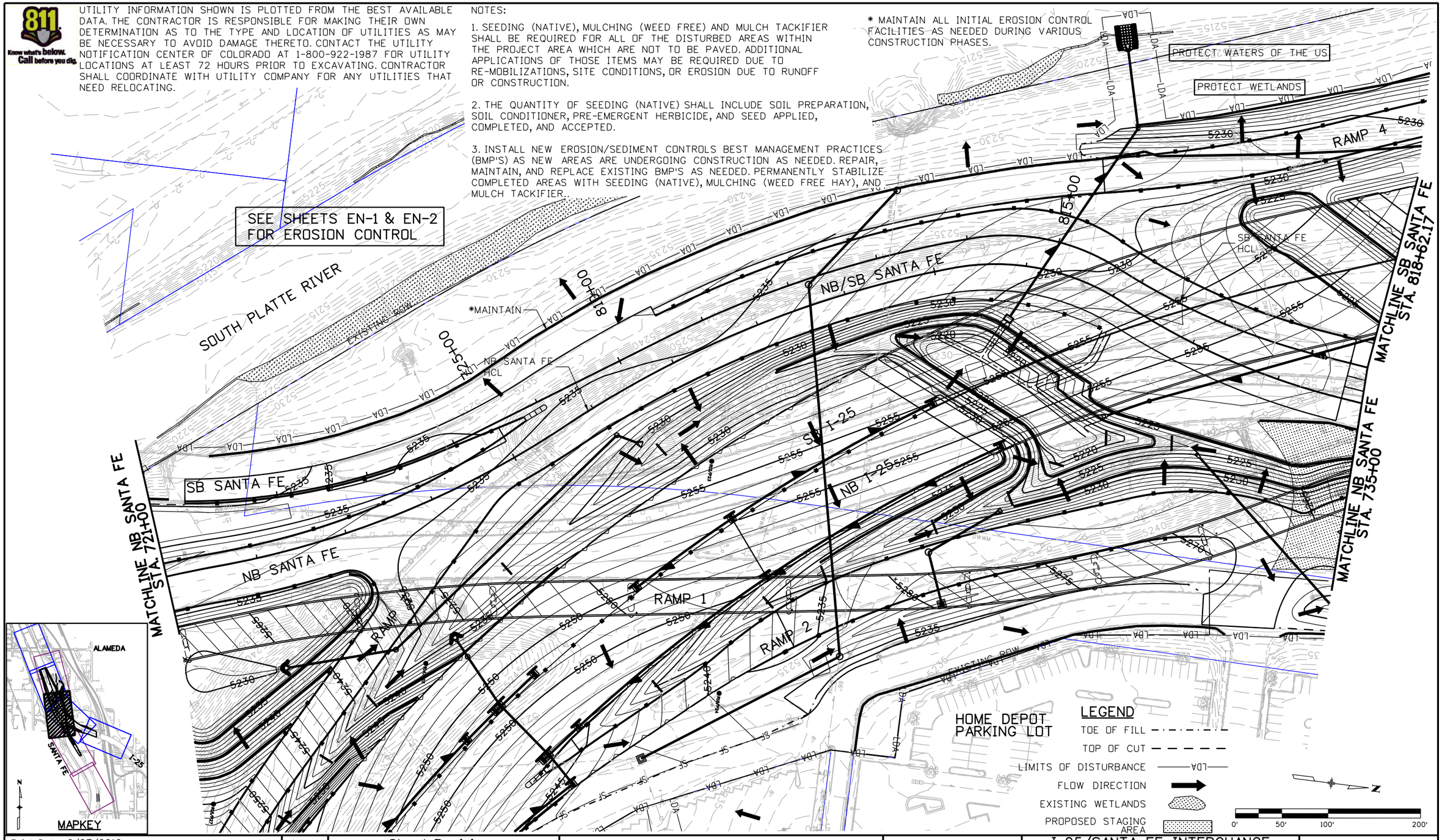

Print Date: 9/27/2010	Sheet Revisions		
File Name: 16311LAND_ENVI_PH2_INT_SantaFePlan3.dgn	Date:	Comments	Init.
Horiz. Scale: 1:100 Vert. Scale: As Noted			
Unit Information Unit Leader Initials			
FELSBURG HOLT & ULLEVIG 6300 South Syracuse Way Centennial, CO 80111			

Colorado Department of Transportation
2000 South Holly Street
Denver, CO 80222
Phone: 303-972-9112 FAX: 303-972-9114
Region 6 RLB

As Constructed
No Revisions:
Revised:
Void:

I-25/SANTA FE INTERCHANGE
SANTA FE INTERIM
GRADING/EROSION CONTROL PLAN

Designer: ELL
Detailer: RSA
Sheet Subset: EROSION
Structure Numbers:
Subset Sheets: EN-6 of 7

Project No./Code
IM 0254-394
16311
Sheet Number 375

rynal 1:44:59 PM K:\08276\16311\Phase 2\Landscape_Environmental\Drawings\16311LAND_ENVI_PH2_INT_SantaFePlan3.dgn
9/27/2010 CDOT-PDFDraftQuality_XM.pltcfg *

Know what's below. Call before you dig.

UTILITY INFORMATION SHOWN IS PLOTTED FROM THE BEST AVAILABLE DATA. THE CONTRACTOR IS RESPONSIBLE FOR MAKING THEIR OWN DETERMINATION AS TO THE TYPE AND LOCATION OF UTILITIES AS MAY BE NECESSARY TO AVOID DAMAGE THERETO. CONTACT THE UTILITY NOTIFICATION CENTER OF COLORADO AT 1-800-922-1987 FOR UTILITY LOCATIONS AT LEAST 72 HOURS PRIOR TO EXCAVATING. CONTRACTOR SHALL COORDINATE WITH UTILITY COMPANY FOR ANY UTILITIES THAT NEED RELOCATING.

SEE SHEETS EN-3 & EN-4 FOR EROSION CONTROL

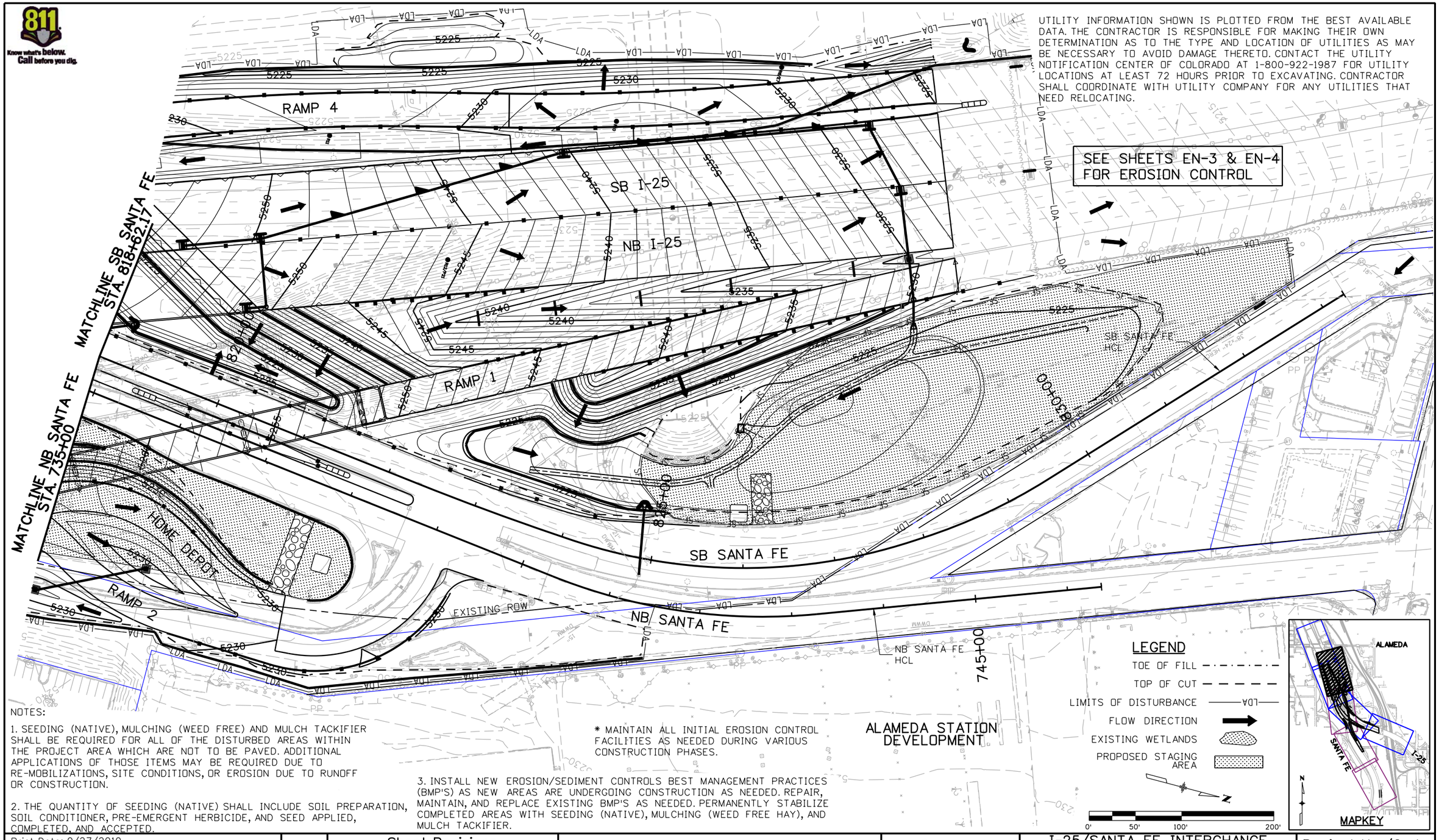

NOTES:

1. SEEDING (NATIVE), MULCHING (WEED FREE) AND MULCH TACKIFIER SHALL BE REQUIRED FOR ALL OF THE DISTURBED AREAS WITHIN THE PROJECT AREA WHICH ARE NOT TO BE PAVED. ADDITIONAL APPLICATIONS OF THOSE ITEMS MAY BE REQUIRED DUE TO RE-MOBILIZATIONS, SITE CONDITIONS, OR EROSION DUE TO RUNOFF OR CONSTRUCTION.

2. THE QUANTITY OF SEEDING (NATIVE) SHALL INCLUDE SOIL PREPARATION, SOIL CONDITIONER, PRE-EMERGENT HERBICIDE, AND SEED APPLIED, COMPLETED, AND ACCEPTED.

* MAINTAIN ALL INITIAL EROSION CONTROL FACILITIES AS NEEDED DURING VARIOUS CONSTRUCTION PHASES.

3. INSTALL NEW EROSION/SEDIMENT CONTROLS BEST MANAGEMENT PRACTICES (BMP'S) AS NEW AREAS ARE UNDERGOING CONSTRUCTION AS NEEDED. REPAIR, MAINTAIN, AND REPLACE EXISTING BMP'S AS NEEDED. PERMANENTLY STABILIZE COMPLETED AREAS WITH SEEDING (NATIVE), MULCHING (WEED FREE HAY), AND MULCH TACKIFIER.

LEGEND

- TOE OF FILL
- TOP OF CUT
- LIMITS OF DISTURBANCE — LDA —
- FLOW DIRECTION
- EXISTING WETLANDS
- PROPOSED STAGING AREA

0' 50' 100' 200'

Print Date: 9/27/2010	Sheet Revisions		
File Name: 16311LAND_ENVI_PH2_INT_SantaFePlan4.dgn	Date:	Comments	Init.
Horiz. Scale: 1:100 Vert. Scale: As Noted			
Unit Information Unit Leader Initials			
FELSBURG HOLT & ULLEVIG 6300 South Syracuse Way Centennial, CO 80111			

Colorado Department of Transportation
2000 South Holly Street
Denver, CO 80222
Phone: 303-972-9112 FAX: 303-972-9114
Region 6 RLB

As Constructed
No Revisions:
Revised:
Void:

I-25/SANTA FE INTERCHANGE SANTA FE INTERIM GRADING/EROSION CONTROL PLAN

Designer:	ELL	Structure Numbers	
Detailer:	RSA		
Sheet Subset:	EROSION	Subset Sheets: EN-7 of 7	

Project No./Code
IM 0254-394
16311
Sheet Number 376

rynal 1:45:20 PM K:\08276\16311\Phase 2\Landscape_Environmental\Drawings\16311LAND_ENVI_PH2_INT_SantaFePlan4.dgn
9/27/2010 CDOT-PDFDraftQuality_XM.pltcfg *

UTILITY INFORMATION SHOWN IS PLOTTED FROM THE BEST AVAILABLE DATA. THE CONTRACTOR IS RESPONSIBLE FOR MAKING THEIR OWN DETERMINATION AS TO THE TYPE AND LOCATION OF UTILITIES AS MAY BE NECESSARY TO AVOID DAMAGE THERETO. CONTACT THE UTILITY NOTIFICATION CENTER OF COLORADO AT 1-800-922-1987 FOR UTILITY LOCATIONS AT LEAST 72 HOURS PRIOR TO EXCAVATING. CONTRACTOR SHALL COORDINATE WITH UTILITY COMPANY FOR ANY UTILITIES THAT NEED RELOCATING.

RTD LIGHT RAIL
BROADWAY STATION

OFF RAMP TO BROADWAY

EXISTING ROW

610+00

615+00

SB I-25

NB I-25

I-25 MAINLINE
HCL

EXISTING ROW

LOA

5275

5270

5265

MATCHLINE I-25 STA. 619+00

I-25 FRONTAGE ROAD

EXISTING ROW

CONSOLIDATED RAILROAD

S. CHEROKEE ST.

STOR. ALL STORAGE

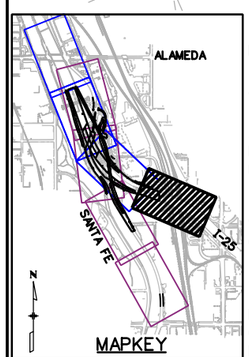

MAPKEY

NOTES:

1. SEEDING (NATIVE), MULCHING (WEED FREE) AND MULCH TACKIFIER SHALL BE REQUIRED FOR ALL OF THE DISTURBED AREAS WITHIN THE PROJECT AREA WHICH ARE NOT TO BE PAVED. ADDITIONAL APPLICATIONS OF THOSE ITEMS MAY BE REQUIRED DUE TO RE-MOBILIZATIONS, SITE CONDITIONS, OR EROSION DUE TO RUNOFF OR CONSTRUCTION.

2. THE QUANTITY OF SEEDING (NATIVE) SHALL INCLUDE SOIL PREPARATION, SOIL CONDITIONER, PRE-EMERGENT HERBICIDE, AND SEED APPLIED, COMPLETED, AND ACCEPTED.

3. INSTALL NEW EROSION/SEDIMENT CONTROLS BEST MANAGEMENT PRACTICES (BMP'S) AS NEW AREAS ARE UNDERGOING CONSTRUCTION AS NEEDED. REPAIR, MAINTAIN, AND REPLACE EXISTING BMP'S AS NEEDED. PERMANENTLY STABILIZE COMPLETED AREAS WITH SEEDING (NATIVE), MULCHING (WEED FREE HAY), AND MULCH TACKIFIER..

LEGEND

- TOE OF FILL
- TOP OF CUT
- LIMITS OF DISTURBANCE (LOA)
- FLOW DIRECTION
- EXISTING WETLANDS
- SOIL RETENTION BLANKET (STRAW/COCONUT)
- SOIL RETENTION BLANKET (SPECIAL)

0' 50' 100' 200'

Print Date: 9/27/2010
File Name: 16311LAND_ENVI_PH2_FIN_I-25Plan1.dgn
Horiz. Scale: 1:100 Vert. Scale: As Noted
Unit Information Unit Leader Initials

FELSBURG HOLT & ULLEVIG 6300 South Syracuse Way Centennial, CO 80111

Sheet Revisions		
Date:	Comments	Init.

Colorado Department of Transportation
2000 South Holly Street
Denver, CO 80222
Phone: 303-972-9112 FAX: 303-972-9114
Region 6 RLB

As Constructed
No Revisions:
Revised:
Void:

I-25/SANTA FE INTERCHANGE
I-25 FINAL
GRADING/EROSION CONTROL PLAN

Designer: ELL
Detailer: RSA
Sheet Subset: EROSION
Structure Numbers:
Subset Sheets: EF-1 of 7

Project No./Code
IM 0254-394
16311
Sheet Number 377

rynal 11:45:52 PM K:\08276\16311\Phase 2\Landscape_Environmental\Drawings\16311LAND_ENVI_PH2_FIN_I-25Plan1.dgn
9/27/2010 CDOT-PDFDraftQuality_XM.pltcfg *

Know what's below. Call before you dig. 811

UTILITY INFORMATION SHOWN IS PLOTTED FROM THE BEST AVAILABLE DATA. THE CONTRACTOR IS RESPONSIBLE FOR MAKING THEIR OWN DETERMINATION AS TO THE TYPE AND LOCATION OF UTILITIES AS MAY BE NECESSARY TO AVOID DAMAGE THERETO. CONTACT THE UTILITY NOTIFICATION CENTER OF COLORADO AT 1-800-922-1987 FOR UTILITY LOCATIONS AT LEAST 72 HOURS PRIOR TO EXCAVATING. CONTRACTOR SHALL COORDINATE WITH UTILITY COMPANY FOR ANY UTILITIES THAT NEED RELOCATING.

PROTECT WETLANDS

PROTECT WATERS OF THE US

NB SANTA FE

SB SANTA FE

NB/SB SANTA FE

RAMP 1

RAMP 2

RAMP 3

RAMP 4

NB I-25

SB I-25

I-25 FRONTAGE ROAD

EXISTING ROW

SOIL RETENTION BLANKET (STRAW/COCONUT) (120 SY)

SOIL RETENTION BLANKET (SPECIAL) (560 SY)

SOIL RETENTION BLANKET (STRAW/COCONUT) (4190 SY)

SOIL RETENTION BLANKET (SPECIAL) (720 SY)

I-25 MAINLINE HCL

MATCHLINE I-25 STA. 619+00

MATCHLINE I-25 STA. 632+00

U.S. WELDING

W. CENTER AVE.

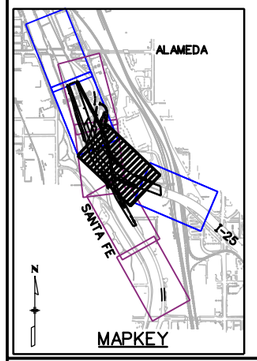

NOTES:

1. SEEDING (NATIVE), MULCHING (WEED FREE) AND MULCH TACKIFIER SHALL BE REQUIRED FOR ALL OF THE DISTURBED AREAS WITHIN THE PROJECT AREA WHICH ARE NOT TO BE PAVED. ADDITIONAL APPLICATIONS OF THOSE ITEMS MAY BE REQUIRED DUE TO RE-MOBILIZATIONS, SITE CONDITIONS, OR EROSION DUE TO RUNOFF OR CONSTRUCTION.

2. THE QUANTITY OF SEEDING (NATIVE) SHALL INCLUDE SOIL PREPARATION, SOIL CONDITIONER, PRE-EMERGENT HERBICIDE, AND SEED APPLIED, COMPLETED, AND ACCEPTED.

3. INSTALL NEW EROSION/SEDIMENT CONTROLS BEST MANAGEMENT PRACTICES (BMP'S) AS NEW AREAS ARE UNDERGOING CONSTRUCTION AS NEEDED. REPAIR, MAINTAIN, AND REPLACE EXISTING BMP'S AS NEEDED. PERMANENTLY STABILIZE COMPLETED AREAS WITH SEEDING (NATIVE), MULCHING (WEED FREE HAY), AND MULCH TACKIFIER..

LEGEND

- TOE OF FILL
- TOP OF CUT
- LIMITS OF DISTURBANCE (LDA)
- FLOW DIRECTION
- EXISTING WETLANDS
- SOIL RETENTION BLANKET (STRAW/COCONUT)
- SOIL RETENTION BLANKET (SPECIAL)

N

0' 50' 100' 200'

Print Date: 9/27/2010	
File Name: 16311LAND_ENVI_PH2_FIN_I-25Plan2.dgn	
Horiz. Scale: 1:100	Vert. Scale: As Noted
Unit Information	Unit Leader Initials

FELSBURG HOLT & ULLEVIG 6300 South Syracuse Way Centennial, CO 80111

Sheet Revisions		
Date:	Comments	Init.

Colorado Department of Transportation

DOT DEPARTMENT OF TRANSPORTATION

2000 South Holly Street
Denver, CO 80222
Phone: 303-972-9112 FAX: 303-972-9114

Region 6 RLB

As Constructed

No Revisions:

Revised:

Void:

I-25/SANTA FE INTERCHANGE
I-25 FINAL
GRADING/EROSION CONTROL PLAN

Designer:	ELL	Structure Numbers	
Detailer:	RSA		
Sheet Subset:	EROSION	Subset Sheets: EF-2 of 7	

Project No./Code

IM 0254-394

16311

Sheet Number 378

rynal 1:46:09 PM K:\08276\16311\Phase 2\Landscape_Environmental\Drawings\16311LAND_ENVI_PH2_FIN_I-25Plan2.dgn
9/27/2010 CDOT-PDFDraftQuality_XM.pltcfg *

UTILITY INFORMATION SHOWN IS PLOTTED FROM THE BEST AVAILABLE DATA. THE CONTRACTOR IS RESPONSIBLE FOR MAKING THEIR OWN DETERMINATION AS TO THE TYPE AND LOCATION OF UTILITIES AS MAY BE NECESSARY TO AVOID DAMAGE THERETO. CONTACT THE UTILITY NOTIFICATION CENTER OF COLORADO AT 1-800-922-1987 FOR UTILITY LOCATIONS AT LEAST 72 HOURS PRIOR TO EXCAVATING. CONTRACTOR SHALL COORDINATE WITH UTILITY COMPANY FOR ANY UTILITIES THAT NEED RELOCATING.

NOTES:

1. SEEDING (NATIVE), MULCHING (WEED FREE) AND MULCH TACKIFIER SHALL BE REQUIRED FOR ALL OF THE DISTURBED AREAS WITHIN THE PROJECT AREA WHICH ARE NOT TO BE PAVED. ADDITIONAL APPLICATIONS OF THOSE ITEMS MAY BE REQUIRED DUE TO RE-MOBILIZATIONS, SITE CONDITIONS, OR EROSION DUE TO RUNOFF OR CONSTRUCTION.

2. THE QUANTITY OF SEEDING (NATIVE) SHALL INCLUDE SOIL PREPARATION, SOIL CONDITIONER, PRE-EMERGENT HERBICIDE, AND SEED APPLIED, COMPLETED, AND ACCEPTED.

3. INSTALL NEW EROSION/SEDIMENT CONTROLS BEST MANAGEMENT PRACTICES (BMP'S) AS NEW AREAS ARE UNDERGOING CONSTRUCTION AS NEEDED. REPAIR, MAINTAIN, AND REPLACE EXISTING BMP'S AS NEEDED. PERMANENTLY STABILIZE COMPLETED AREAS WITH SEEDING (NATIVE), MULCHING (WEED FREE HAY), AND MULCH TACKIFIER..

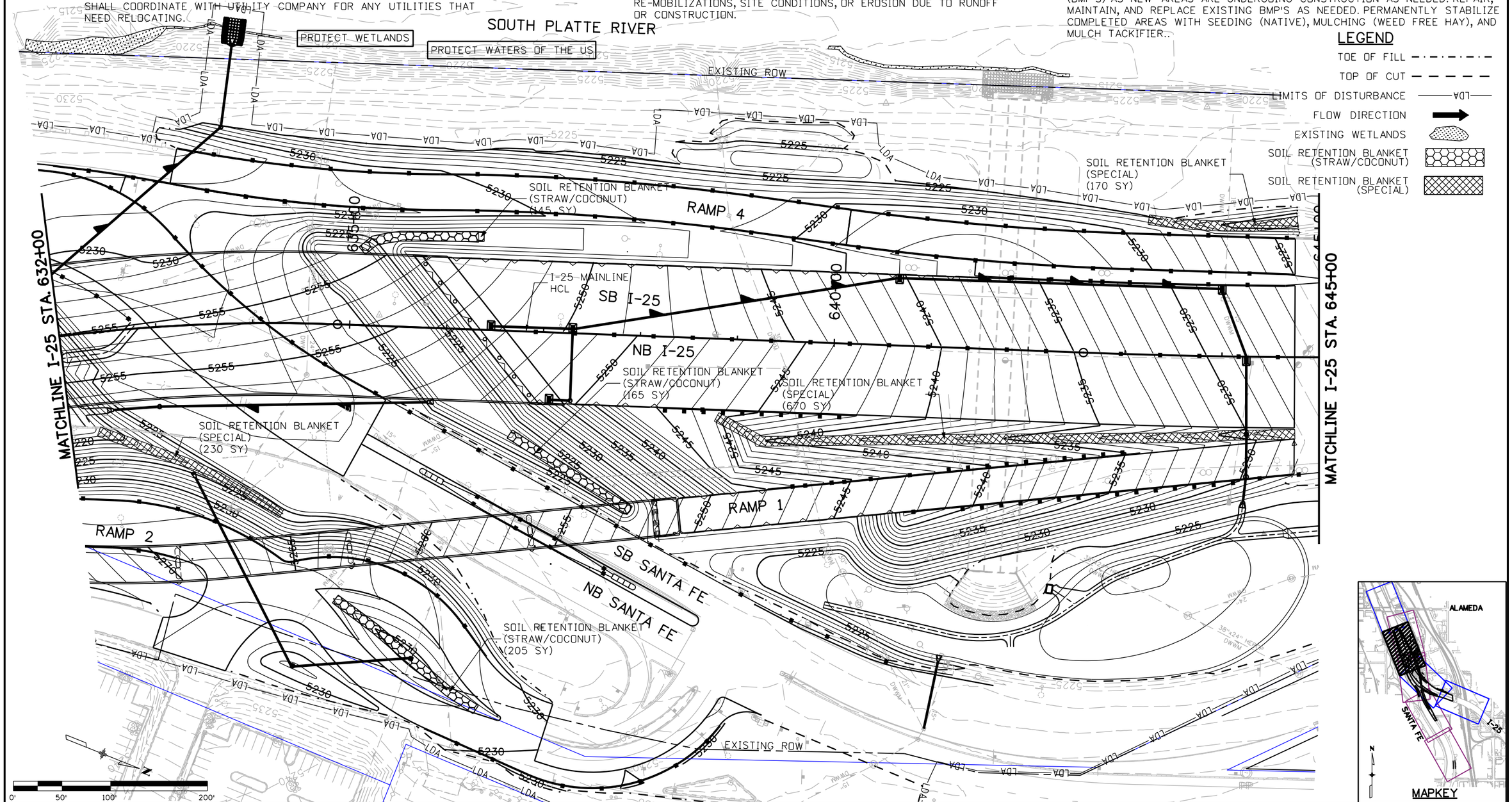

LEGEND

- TOE OF FILL
- TOP OF CUT
- LIMITS OF DISTURBANCE — LDA —
- FLOW DIRECTION
- EXISTING WETLANDS
- SOIL RETENTION BLANKET (STRAW/COCONUT)
- SOIL RETENTION BLANKET (SPECIAL)

Print Date: 9/27/2010	Sheet Revisions	Colorado Department of Transportation	As Constructed
File Name: 16311LAND_ENVI_PH2_FIN_I-25Plan3.dgn	Date: / Comments / Init.	2000 South Holly Street, Denver, CO 80222	No Revisions:
Horiz. Scale: 1:100 Vert. Scale: As Noted		Phone: 303-972-9112 FAX: 303-972-9114	Revised:
Unit Information Unit Leader Initials		Region 6 RLB	Void:
FELSBURG HOLT & ULLEVIG 6300 South Syracuse Way Centennial, CO 80111			

I-25/SANTA FE INTERCHANGE
I-25 FINAL
GRADING/EROSION CONTROL PLAN

Designer:	ELL	Structure Numbers	
Detailer:	RSA		
Sheet Subset:	EROSION	Subset Sheets: EF-3 of 7	

Project No./Code
IM 0254-394
16311
Sheet Number 379

rynal 1:46:29 PM K:\08276\16311\Phase 2\Landscape_Environmental\Drawings\16311LAND_ENVI_PH2_FIN_I-25Plan3.dgn
9/27/2010 CDOT-PDFDraftQuality_XM.pltcfg *

UTILITY INFORMATION SHOWN IS PLOTTED FROM THE BEST AVAILABLE DATA. THE CONTRACTOR IS RESPONSIBLE FOR MAKING THEIR OWN DETERMINATION AS TO THE TYPE AND LOCATION OF UTILITIES AS MAY BE NECESSARY TO AVOID DAMAGE THERETO. CONTACT THE UTILITY NOTIFICATION CENTER OF COLORADO AT 1-800-922-1987 FOR UTILITY LOCATIONS AT LEAST 72 HOURS PRIOR TO EXCAVATING. CONTRACTOR SHALL COORDINATE WITH UTILITY COMPANY FOR ANY UTILITIES THAT NEED RELOCATING.

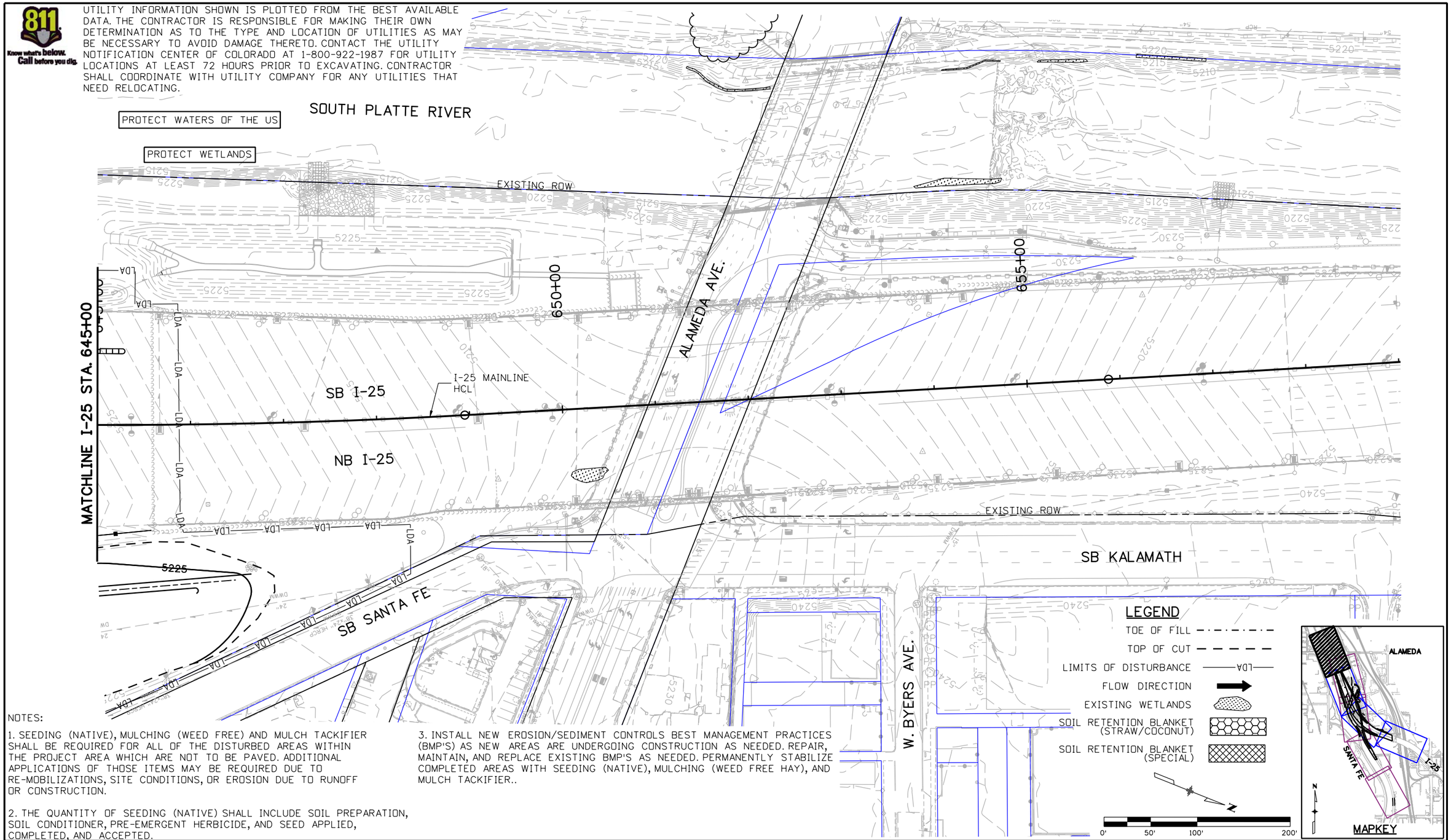

NOTES:

1. SEEDING (NATIVE), MULCHING (WEED FREE) AND MULCH TACKIFIER SHALL BE REQUIRED FOR ALL OF THE DISTURBED AREAS WITHIN THE PROJECT AREA WHICH ARE NOT TO BE PAVED. ADDITIONAL APPLICATIONS OF THOSE ITEMS MAY BE REQUIRED DUE TO RE-MOBILIZATIONS, SITE CONDITIONS, OR EROSION DUE TO RUNOFF OR CONSTRUCTION.

2. THE QUANTITY OF SEEDING (NATIVE) SHALL INCLUDE SOIL PREPARATION, SOIL CONDITIONER, PRE-EMERGENT HERBICIDE, AND SEED APPLIED, COMPLETED, AND ACCEPTED.

3. INSTALL NEW EROSION/SEDIMENT CONTROLS BEST MANAGEMENT PRACTICES (BMP'S) AS NEW AREAS ARE UNDERGOING CONSTRUCTION AS NEEDED. REPAIR, MAINTAIN, AND REPLACE EXISTING BMP'S AS NEEDED. PERMANENTLY STABILIZE COMPLETED AREAS WITH SEEDING (NATIVE), MULCHING (WEED FREE HAY), AND MULCH TACKIFIER..

Print Date:	9/27/2010
File Name:	16311LAND_ENVI_PH2_FIN_I-25Plan4.dgn
Horiz. Scale:	1:100
Vert. Scale:	As Noted
Unit Information	Unit Leader Initials

FELSBURG HOLT & ULLEVIG
6300 South Syracuse Way
Centennial, CO 80111

Sheet Revisions		
Date:	Comments	Init.

Colorado Department of Transportation
DEPARTMENT OF TRANSPORTATION
2000 South Holly Street
Denver, CO 80222
Phone: 303-972-9112 FAX: 303-972-9114
Region 6 RLB

As Constructed
No Revisions:
Revised:
Void:

I-25/SANTA FE INTERCHANGE
I-25 FINAL
GRADING/EROSION CONTROL PLAN

Designer:	ELL	Structure Numbers	
Detailer:	RSA		
Sheet Subset:	EROSION	Subset Sheets:	EF-4 of 7

Project No./Code
IM 0254-394
16311
Sheet Number 380

rynal 1:46:47 PM K:\08276\16311\Phase 2\Landscape_Environmental\Drawings\16311LAND_ENVI_PH2_FIN_I-25Plan4.dgn
9/27/2010 CDOT-PDFDraftQuality_XM.pltcfg *

UTILITY INFORMATION SHOWN IS PLOTTED FROM THE BEST AVAILABLE DATA. THE CONTRACTOR IS RESPONSIBLE FOR MAKING THEIR OWN DETERMINATION AS TO THE TYPE AND LOCATION OF UTILITIES AS MAY BE NECESSARY TO AVOID DAMAGE THERETO. CONTACT THE UTILITY NOTIFICATION CENTER OF COLORADO AT 1-800-922-1987 FOR UTILITY LOCATIONS AT LEAST 72 HOURS PRIOR TO EXCAVATING. CONTRACTOR SHALL COORDINATE WITH UTILITY COMPANY FOR ANY UTILITIES THAT NEED RELOCATING.

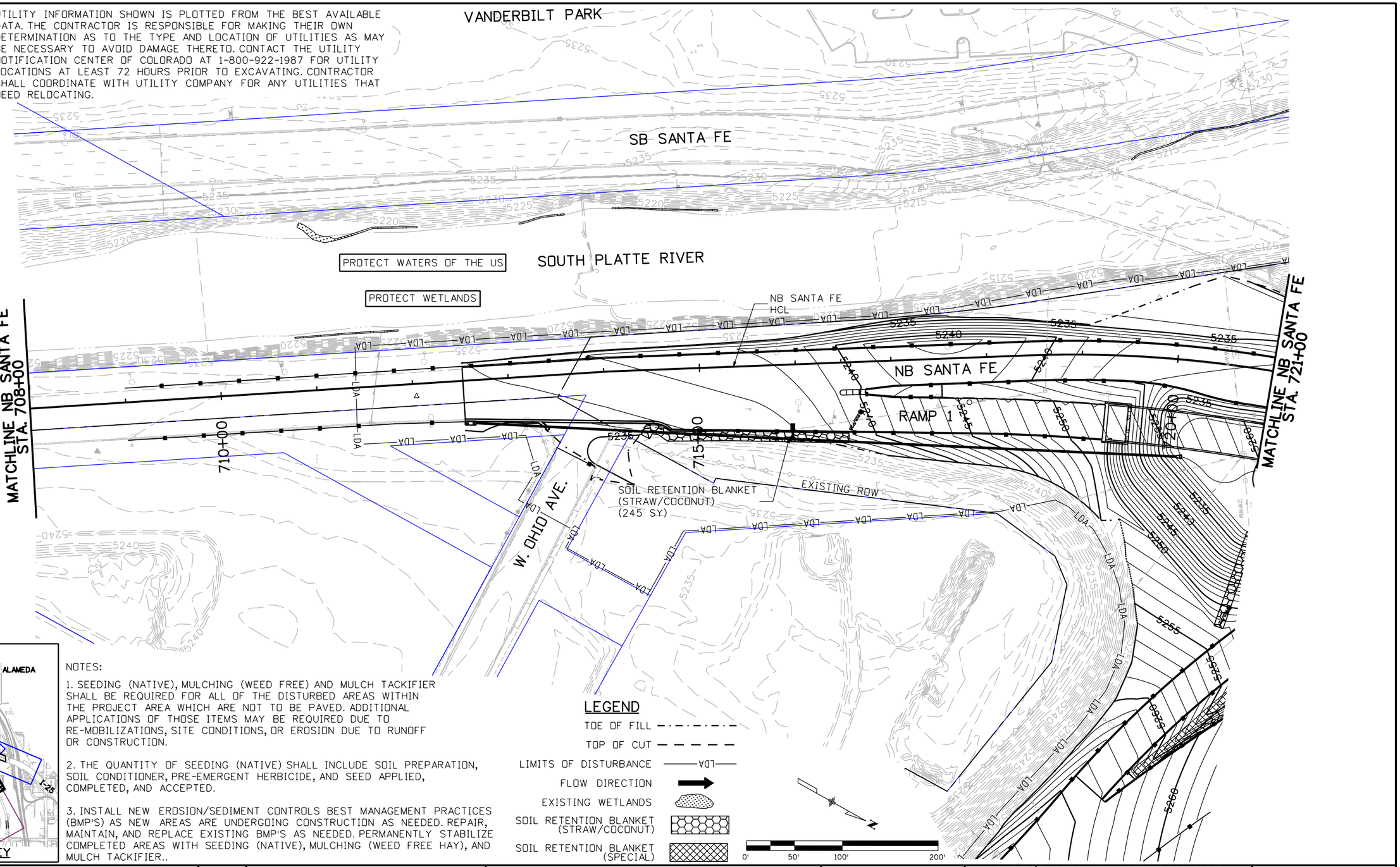

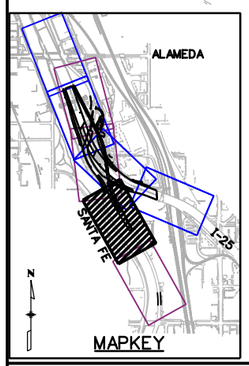

NOTES:

1. SEEDING (NATIVE), MULCHING (WEED FREE) AND MULCH TACKIFIER SHALL BE REQUIRED FOR ALL OF THE DISTURBED AREAS WITHIN THE PROJECT AREA WHICH ARE NOT TO BE PAVED. ADDITIONAL APPLICATIONS OF THOSE ITEMS MAY BE REQUIRED DUE TO RE-MOBILIZATIONS, SITE CONDITIONS, OR EROSION DUE TO RUNOFF OR CONSTRUCTION.

2. THE QUANTITY OF SEEDING (NATIVE) SHALL INCLUDE SOIL PREPARATION, SOIL CONDITIONER, PRE-EMERGENT HERBICIDE, AND SEED APPLIED, COMPLETED, AND ACCEPTED.

3. INSTALL NEW EROSION/SEDIMENT CONTROLS BEST MANAGEMENT PRACTICES (BMP'S) AS NEW AREAS ARE UNDERGOING CONSTRUCTION AS NEEDED. REPAIR, MAINTAIN, AND REPLACE EXISTING BMP'S AS NEEDED. PERMANENTLY STABILIZE COMPLETED AREAS WITH SEEDING (NATIVE), MULCHING (WEED FREE HAY), AND MULCH TACKIFIER..

LEGEND

- TOE OF FILL
- TOP OF CUT
- LIMITS OF DISTURBANCE (LDA)
- FLOW DIRECTION
- EXISTING WETLANDS
- SOIL RETENTION BLANKET (STRAW/COCONUT)
- SOIL RETENTION BLANKET (SPECIAL)

0' 50' 100' 200'

Print Date: 9/27/2010
File Name: 16311LAND_ENVI_PH2_FIN_SantaFePlan2.dgn
Horiz. Scale: 1:100 Vert. Scale: As Noted
Unit Information Unit Leader Initials

FELSBURG HOLT & ULLEVIG 6300 South Syracuse Way Centennial, CO 80111

Sheet Revisions		
Date:	Comments	Init.

Colorado Department of Transportation
2000 South Holly Street
Denver, CO 80222
Phone: 303-972-9112 FAX: 303-972-9114
Region 6 RLB

As Constructed
No Revisions:
Revised:
Void:

I-25/SANTA FE INTERCHANGE
SANTA FE FINAL
GRADING/EROSION CONTROL PLAN

Designer: ELL
Detailer: RSA
Sheet Subset: EROSION
Structure Numbers:
Subset Sheets: EF-5 of 7

Project No./Code
IM 0254-394
16311
Sheet Number 381

rynal1:47:08 PM K:\08276\16311\Phase 2\Landscape_Environmental\Drawings\16311LAND_ENVI_PH2_FIN_SantaFePlan2.dgn
9/27/2010 CDOT-PDFDraftQuality_XM.pltcfg *

UTILITY INFORMATION SHOWN IS PLOTTED FROM THE BEST AVAILABLE DATA. THE CONTRACTOR IS RESPONSIBLE FOR MAKING THEIR OWN DETERMINATION AS TO THE TYPE AND LOCATION OF UTILITIES AS MAY BE NECESSARY TO AVOID DAMAGE THERETO. CONTACT THE UTILITY NOTIFICATION CENTER OF COLORADO AT 1-800-922-1987 FOR UTILITY LOCATIONS AT LEAST 72 HOURS PRIOR TO EXCAVATING. CONTRACTOR SHALL COORDINATE WITH UTILITY COMPANY FOR ANY UTILITIES THAT NEED RELOCATING.

NOTES:

1. SEEDING (NATIVE), MULCHING (WEED FREE) AND MULCH TACKIFIER SHALL BE REQUIRED FOR ALL OF THE DISTURBED AREAS WITHIN THE PROJECT AREA WHICH ARE NOT TO BE PAVED. ADDITIONAL APPLICATIONS OF THOSE ITEMS MAY BE REQUIRED DUE TO RE-MOBILIZATIONS, SITE CONDITIONS, OR EROSION DUE TO RUNOFF OR CONSTRUCTION.

2. THE QUANTITY OF SEEDING (NATIVE) SHALL INCLUDE SOIL PREPARATION, SOIL CONDITIONER, PRE-EMERGENT HERBICIDE, AND SEED APPLIED, COMPLETED, AND ACCEPTED.

3. INSTALL NEW EROSION/SEDIMENT CONTROLS BEST MANAGEMENT PRACTICES (BMP'S) AS NEW AREAS ARE UNDERGOING CONSTRUCTION AS NEEDED. REPAIR, MAINTAIN, AND REPLACE EXISTING BMP'S AS NEEDED. PERMANENTLY STABILIZE COMPLETED AREAS WITH SEEDING (NATIVE), MULCHING (WEED FREE HAY), AND MULCH TACKIFIER.

SEE SHEETS EF-1 & EF-2
FOR EROSION CONTROL

PROTECT WATERS OF THE US

PROTECT WETLANDS

SOUTH PLATTE RIVER

EXISTING ROW

NB SANTA FE

SB SANTA FE

NB/SB SANTA FE

SB I-25

NB I-25

RAMP 1

RAMP 2

RAMP 4

SB SANTA FE HCL

NB SANTA FE HCL

MATCHLINE NB SANTA FE STA. 721+00

MATCHLINE NB SANTA FE STA. 735+00

MATCHLINE SB SANTA FE STA. 818+62.17

815+00

818+00

825+00

HOME DEPOT PARKING LOT

LEGEND

- TOE OF FILL
- TOP OF CUT
- LIMITS OF DISTURBANCE (LOD)
- FLOW DIRECTION
- EXISTING WETLANDS
- SOIL RETENTION BLANKET (STRAW/COCONUT)
- SOIL RETENTION BLANKET (SPECIAL)

0' 50' 100' 200'

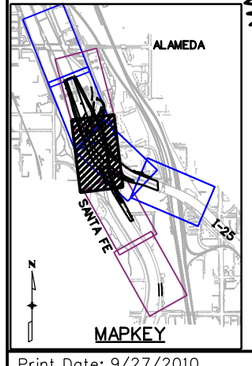

MAPKEY

Print Date: 9/27/2010	Sheet Revisions	
File Name: 16311LAND_ENVI_PH2_FIN_SantaFePlan3.dgn	Date:	Comments / Init.
Horiz. Scale: 1:100 Vert. Scale: As Noted		
Unit Information Unit Leader Initials		

FELSBURG HOLT & ULLEVIG 6300 South Syracuse Way Centennial, CO 80111

Colorado Department of Transportation
DEPARTMENT OF TRANSPORTATION
2000 South Holly Street
Denver, CO 80222
Phone: 303-972-9112 FAX: 303-972-9114
Region 6 RLB

As Constructed
No Revisions:
Revised:
Void:

I-25/SANTA FE INTERCHANGE
SANTA FE FINAL
GRADING/EROSION CONTROL PLAN

Designer: ELL
Detailer: RSA
Sheet Subset: EROSION
Structure Numbers:
Subset Sheets: EF-6 of 7

Project No./Code
IM 0254-394
16311
Sheet Number 382

rynal i:47:24 PM K:\08276\16311\Phase 2\Landscape_Environmental\Drawings\16311LAND_ENVI_PH2_FIN_SantaFePlan3.dgn
9/27/2010 CDOT-PDFDraftQuality_XM.pltcfg *

Know what's below. Call before you dig.

UTILITY INFORMATION SHOWN IS PLOTTED FROM THE BEST AVAILABLE DATA. THE CONTRACTOR IS RESPONSIBLE FOR MAKING THEIR OWN DETERMINATION AS TO THE TYPE AND LOCATION OF UTILITIES AS MAY BE NECESSARY TO AVOID DAMAGE THERETO. CONTACT THE UTILITY NOTIFICATION CENTER OF COLORADO AT 1-800-922-1987 FOR UTILITY LOCATIONS AT LEAST 72 HOURS PRIOR TO EXCAVATING. CONTRACTOR SHALL COORDINATE WITH UTILITY COMPANY FOR ANY UTILITIES THAT NEED RELOCATING.

SEE SHEETS EF-3 & EF-4 FOR EROSION CONTROL

RAMP 4
RAMP 1
RAMP 2
SB I-25
NB I-25
HOME DEPOT
SB SANTA FE
NB SANTA FE
EXISTING ROW
SB SANTA FE HCL
NB SANTA FE HCL
MATCHLINE SB SANTA FE STA. 818+62.17
MATCHLINE NB SANTA FE STA. 735+00
830+00
745+00
ALAMEDA STATION DEVELOPMENT

NOTES:

1. SEEDING (NATIVE), MULCHING (WEED FREE) AND MULCH TACKIFIER SHALL BE REQUIRED FOR ALL OF THE DISTURBED AREAS WITHIN THE PROJECT AREA WHICH ARE NOT TO BE PAVED. ADDITIONAL APPLICATIONS OF THOSE ITEMS MAY BE REQUIRED DUE TO RE-MOBILIZATIONS, SITE CONDITIONS, OR EROSION DUE TO RUNOFF OR CONSTRUCTION.

2. THE QUANTITY OF SEEDING (NATIVE) SHALL INCLUDE SOIL PREPARATION, SOIL CONDITIONER, PRE-EMERGENT HERBICIDE, AND SEED APPLIED, COMPLETED, AND ACCEPTED.

3. INSTALL NEW EROSION/SEDIMENT CONTROLS BEST MANAGEMENT PRACTICES (BMP'S) AS NEW AREAS ARE UNDERGOING CONSTRUCTION AS NEEDED. REPAIR, MAINTAIN, AND REPLACE EXISTING BMP'S AS NEEDED. PERMANENTLY STABILIZE COMPLETED AREAS WITH SEEDING (NATIVE), MULCHING (WEED FREE HAY), AND MULCH TACKIFIER.

LEGEND

- TOE OF FILL
- TOP OF CUT
- LIMITS OF DISTURBANCE (LDA)
- FLOW DIRECTION
- EXISTING WETLANDS
- SOIL RETENTION BLANKET (STRAW/COCONUT)
- SOIL RETENTION BLANKET (SPECIAL)

0' 50' 100' 200'

ALAMEDA
SANTA FE
I-25
N
MAPKEY

Print Date: 9/27/2010	
File Name: 16311LAND_ENVI_PH2_FIN_SantaFePlan4.dgn	
Horiz. Scale: 1:100	Vert. Scale: As Noted
Unit Information	Unit Leader Initials

FELSBURG HOLT & ULLEVIG 6300 South Syracuse Way Centennial, CO 80111

Sheet Revisions		
Date:	Comments	Init.

Colorado Department of Transportation
DEPARTMENT OF TRANSPORTATION
2000 South Holly Street
Denver, CO 80222
Phone: 303-972-9112 FAX: 303-972-9114
Region 6 RLB

As Constructed
No Revisions:
Revised:
Void:

I-25/SANTA FE INTERCHANGE
SANTA FE FINAL
GRADING/EROSION CONTROL PLAN

Designer:	ELL	Structure Numbers	
Detailer:	RSA		
Sheet Subset:	EROSION	Subset Sheets:	EF-7 of 7

Project No./Code
IM 0254-394
16311
Sheet Number 383

rynal1:47:43 PM K:\08276\16311\Phase 2\Landscape_Environmental\Drawings\16311LAND_ENVI_PH2_FIN_SantaFePlan4.dgn
9/27/2010 CDOT-PDFDraftQuality_XM.pltcfg *

DRAINAGE GENERAL NOTES:

1. THE CONTRACTOR SHALL BE RESPONSIBLE FOR THE ACCEPTANCE AND CONTROL OF ALL SURFACE, SUBSURFACE DRAINAGE AND GROUNDWATER ENTERING THE CONSTRUCTION AREA. DEWATERING METHODS SHALL BE APPROVED BY THE ENGINEER. IF A DEWATERING PERMIT IS REQUIRED, THE CONTRACTOR WILL BE RESPONSIBLE FOR OBTAINING THE PERMIT AND THE COSTS ASSOCIATED WITH SAID PERMIT. DEWATERING IS PAID FOR UNDER ITEM 211, SEE REVISION OF SECTION 211 DEWATERING FOR ADDITIONAL INFORMATION.

2. THE CONTRACTOR SHALL BE RESPONSIBLE TO VERIFY PIPE LENGTHS AND LOCATIONS PRIOR TO ORDERING AND DELIVERY OF PIPE MATERIAL TO THE SITE.

3. NORTHING & EASTING INFORMATION FOR MANHOLES (SLAB BASE AND BOX BASE) IS TO THE CENTER OF THE BASE. NORTHING & EASTING HORIZONTAL CONTROLS HAVE BEEN ROUNDED OFF TO THE NEAREST HUNDREDTH OF A FOOT.

4. STRUCTURAL BACKFILL (FLOW-FILL) SHALL BE USED IN PLACE OF STRUCTURAL BACKFILL CLASS 1 FOR STORM SEWERS THAT ARE LOCATED UNDER ROADWAYS AND HAVE 2 FEET OR LESS OF COVER FROM TOP OF FINISHED SUBGRADE TO TOP OF PIPE. FLOW-FILL WILL NOT BE PAID FOR SEPARATELY BUT SHALL BE INCLUDED IN THE COST OF THE PIPE.

5. INLET GRATE ELEVATIONS SHOWN ON THE PLANS ARE APPROXIMATE. FINAL ELEVATIONS ARE TO BE DETERMINED IN THE FIELD.

6. ALL PIPE LENGTHS ARE HORIZONTAL DIMENSIONS AND HAVE BEEN ROUNDED UP TO THE NEAREST FOOT.

7. THE COST OF ALL JOINT GASKETS, CRADLES, COLLARS AND PIPE CONNECTIONS FOR STORM SEWER CONSTRUCTION AND CULVERT PIPES SHALL BE INCLUDED IN THE COST OF THE PIPE.

8. RUBBER GASKETS SHALL BE USED FOR ALL RCP JOINTS IN ACCORDANCE WITH ASTM C443.

9. ALL CONCRETE PIPE SHALL BE CLASS III REINFORCED CONCRETE PIPE CONFORMING TO ASTM C76, UNLESS OTHERWISE SPECIFIED.

10. THE TOP PORTION OF INLETS AND MANHOLES SHALL FIT THE LONGITUDINAL PROFILE SLOPE AND TYPICAL SECTIONS REQUIREMENTS. THE CONTRACTOR SHALL CROSS REFERENCE THIS INFORMATION PRIOR TO CONSTRUCTING INLETS AND MANHOLES TO FINAL GRADE.

11. OTHER UTILITIES WILL BE CROSSED OR OTHERWISE IMPACT STORM SEWER CONSTRUCTION. THE CONTRACTOR SHALL PROTECT EXISTING UTILITIES IN PLACE.

12. THE MANUFACTURER'S JOINT TOLERANCE FOR ALL PIPE TYPES USED SHALL BE SUPPLIED TO THE ENGINEER. FOR DEFLECTIONS GREATER THAN THE MANUFACTURER'S TOLERANCE A CONCRETE PIPE COLLAR SHALL BE USED. THE COST OF THE CONCRETE PIPE COLLAR SHALL BE INCLUDED IN THE COST OF THE PIPE.

13. BED COURSE MATERIAL AND GEOTEXTILE (DRAINAGE) REQUIRED WITH RIPRAP PROTECTION WILL NOT BE PAID FOR SEPARATELY BUT SHALL BE INCLUDED IN THE COST OF THE WORK.

14. MANHOLES DENOTED AS SPECIAL SHALL BE CONSTRUCTED ACCORDING TO THE CITY AND COUNTY OF DENVER DETAILS PROVIDED IN THIS SET.

DRAINAGE LEGEND

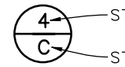

STRUCTURE IDENTIFICATION	STRUCTURE TYPE
C	CDOT TYPE C INLET
T16	TYPE 16 INLET
SVG	CDOT SINGLE VANE GRATE INLET
DVG	CDOT DOUBLE VANE GRATE INLET
MH	CDOT SLAB BASE MANHOLE (SIZE AS NOTED)
MHS	MANHOLE SPECIAL (CCD MANHOLE)
BMH	CDOT BOX BASE MANHOLE
FES	FLARED END SECTION
EX	EXISTING STRUCTURE (TYPE AS NOTED)
PC	PIPE CONNECTION
HW	HEADWALL
PE	PIPE END

Karina 6:57:33 PM P:\9904.12 I-25 Santa Fe Alameda Interchange - FHU\16311\Hydraulics\Drawings\Phase 2\16311HYDR_PH2_General Notes.dgn
9/27/2010 CDOT-PDFHighQuality_XM.pltcfg 9904-CDOT-PenTable-4.00.tbl

Print Date: 9/27/2010
File Name: 16311HYDR_PH2_General Notes.dgn
Horiz. Scale: 1:1 Vert. Scale: As Noted
Unit Information Unit Leader Initials

MULLER ENGINEERING CO, INC
CONSULTING ENGINEERS
P: 9904.12 /16311/HYDRAULICS/Drawings
777 S. Wadsworth Blvd.
Suite 4-100
Lakewood, CO 80226
303-988-4939

Sheet Revisions		
Date:	Comments	Init.

Colorado Department of Transportation
DEPARTMENT OF TRANSPORTATION
2000 South Holly Street
Denver, CO 80222
Phone: 303-972-9112 FAX: 303-972-9114
Region 6 RLB

As Constructed
No Revisions:
Revised:
Void:

I-25/SANTA FE INTERCHANGE
DRAINAGE GENERAL NOTES
SHEET 1 OF 2

Designer: JAY
Detailer: KSP
Sheet Subset: DRAINAGE
Structure Numbers
Subset Sheets: 1 of XX

Project No./Code
IM 0254-394
16311
Sheet Number 384

CITY AND COUNTY OF DENVER GENERAL NOTES:

1. PUBLIC WORKS, WASTEWATER MANAGEMENT DIVISION5#32S STANDARD DETAILS AND TECHNICAL SPECIFICATIONS FOR SANITARY & STORM SEWERS APPLY TO THIS WORK. PUBLIC WORKS, WASTEWATER MANAGEMENT DIVISION5#32S STANDARD DETAILS (DRAWINGS), MOST RECENT EDITION, SHALL BE USED AS A MINIMUM. THIS BOOKLET IS AVAILABLE IN A REDUCED SIZE BOOKLET FORM AND IS AVAILABLE AT THE PUBLIC WORKS PERMIT OPERATIONS (PWPO) DURING NORMAL BUSINESS HOURS. THE TECHNICAL SPECIFICATIONS ARE AVAILABLE FROM PW DES. BOTH SETS MUST BE IN POSSESSION OF THE CONTRACTOR AT THE PRE-CONSTRUCTION CONFERENCE AND MUST REMAIN ON THE JOB SITE AT ALL TIMES DURING CONSTRUCTION. THE STANDARD DETAILS CAN BE VIEWED AT THE FOLLOWING WEBSITE ADDRESS: WWW.DENVERGOV.ORG/DES

2. CONTRACTOR SHALL CONFORM TO ALL FEDERAL, STATE AND LOCAL HEALTH AND SAFETY RULES AND REGULATIONS.

3. ONE SET OF THE APPROVED SEWER CONSTRUCTION DRAWINGS MUST BE ON-SITE AT ALL TIMES OF CONSTRUCTION.

4. ALL SEWER PIPES SHALL BE INSTALLED WITH CLASS B BEDDING AS A MINIMUM.

5. ANY MODIFICATIONS, ADJUSTMENTS, CONSTRUCTION OR RECONSTRUCTION OF PUBLIC WORKS, WASTEWATER DIVISION FACILITIES MUST BE INSPECTED BY A PW DES CONSTRUCTION ENGINEERING INSPECTOR. PLEASE SCHEDULE AN APPOINTMENT AT 303-446-3722 A MINIMUM OF 48 HOURS IN ADVANCE OF THE WORK TO SCHEDULE AN INSPECTOR.

6. PIPE MATERIAL, FITTINGS, TRENCHING, BEDDING, CONNECTIONS, AND SEWER INSTALLATION MUST BE INSPECTED BY A PW DES CONSTRUCTION ENGINEERING INSPECTOR PRIOR TO ANY TRENCH BACKFILL. PLEASE SCHEDULE AN APPOINTMENT AT 303-446-3722 A MINIMUM OF 48 HOURS IN ADVANCE OF THE WORK TO SCHEDULE AN INSPECTOR. MONITORING OF THE PROJECT BY PW DES SHALL BE FOR THE PURPOSE OF ASSURING GENERAL COMPLIANCE WITH THE APPROVED PLANS, STANDARDS, DETAILS, AND SPECIFICATIONS AS WELL AS THE RULES & REGULATIONS. STORM AND SANITARY INSPECTIONS SHALL NOT TAKE THE PLACE OF CONSTRUCTION INSPECTION AND MATERIALS TESTING, WHICH IS THE OWNER5#32S RESPONSIBILITY.

7. SANITARY SEWER PIPES SHALL BE PVC AND CONFORM TO: ASTM D3034 SDR 35 FOR SIZES 8 INCHES TO 15 INCHES IN DIAMETER (SOLID WALL), ASTM F789 FOR 18 INCHES (SOLID WALL), ASTM F679 FOR SIZES 18 TO 36 INCHES (SOLID WALL), ASTM F949 FOR SIZES 8 TO 36 INCHES (PVC PROFILE WALL), ASTM F794 FOR SIZES 8 TO 48 INCHES (PROFILE WALL), OR ASTM F1803 FOR SIZES 18 TO 60 INCHES (CLOSED PROFILE GRAVITY PIPE).

8. ANY QUESTIONS REGARDING PUBLIC WORKS STORM OR SANITARY FACILITIES THAT ARISE DURING CONSTRUCTION SHOULD BE BROUGHT TO THE ATTENTION OF PW DES CONSTRUCTION ENGINEERING INSPECTION AT (303) 446-3722.

9. BACKFILL IN PUBLIC RIGHT OF WAY MUST MEET THE REQUIREMENTS OF DENVER PUBLIC WORKS DEPARTMENT. A STREET CUT PERMIT AND INSPECTION OF A BACKFILL AND PAVEMENT REPAIR BY PUBLIC WORKS IS REQUIRED FOR ALL WORK IN THE PUBLIC RIGHT OF WAY. THE CONTRACTOR AND/OR DEVELOPER IS ADVISED TO CONTACT CONSTRUCTION ENGINEERING ROW INSPECTION AT 303-446-3469 OR PWPO AT 303-446-3759 TO OBTAIN INFORMATION REGARDING FEES AND PROCEDURES FOR OBTAINING THE REQUIRED PERMIT(S). CONTRACTOR MUST OBTAIN A STREET CUT PERMIT AND NOTIFY THE DISTRICT INSPECTOR AT (303) 446-3469, 48-HOURS PRIOR TO START OF JOB. COMPACTION TESTING IS REQUIRED.

10. THE CONTRACTOR PERFORMING WORK ON ANY PUBLIC OR PRIVATE STORM SEWER FACILITY OR APPURTENANCE MUST BE PROPERLY TRADE LICENSED AS A COMPANY AND HAVE A LICENSED PLUMBER OR CERTIFIED JOURNEYMAN DRAINLAYER ON SITE DURING THE WORK.

11. ACCESS MUST BE MAINTAINED FOR ALL SEWER MANHOLES DURING CONSTRUCTION. ANY DESIGN CHANGES TO NEW OR EXISTING PUBLIC STORM OR SANITARY SEWER MUST INCLUDE PERMANENT ACCESS TO THE PUBLIC STORM AND SANITARY SEWER MANHOLES AND COULD REQUIRE ROLL-OVER CURB, COMMERCIAL DRIVE, REINFORCED CONCRETE SIDEWALK, RITTER RINGS OR CONCRETE PAD. MINIMUM ACCESS TO EACH MANHOLE IS A 205#32 WIDE LANE FROM THE NEAREST PUBLIC RIGHT OF WAY, CENTERED AT THE MANHOLE INCLUDING A 105#32 RADIUS AROUND THE MANHOLE AND 22.05#32 VERTICAL CLEARANCE.

12. ALL AREAS OF EXCAVATION WITHIN THE DITCH AND OUTSIDE OF THE CBC LIMITS, INCLUDING SOIL RIPRAP AT THE ENTRANCE AND OUTFALL AND THE TRENCHES FOR THE RELOCATED UTILITIES, SHALL BE BACKFILLED WITH A MINIMUM OF TWO FEET THICK COMPACTED CLAY MATERIAL WITH AT LEAST A PLASTICICITY INDEX OF 12 AND 35% PASSING THE #200 SCREEN. TO BE PAID FOR AS ITEM 203-CLAY PLATING (COMPLETE IN PLACE). COST OF EXCAVATION IS INCLUDED IN THE COST OF WORK.

CITY AND COUNTY OF DENVER GENERAL NOTES (CONTINUED):

13. THE CONNECTION OF A NEW SANITARY/STORM SEWER TO AN EXISTING MANHOLE MAY REQUIRE MANHOLE RECONSTRUCTION AT THE DISCRETION OF THE PW DES CONSTRUCTION ENGINEERING FIELD INSPECTOR OR THE PW DES CONSTRUCTION ENGINEERING ENGINEER.

14. CHANGES IN THE ELEVATION OF AN EXISTING BRICK MANHOLE MAY REQUIRE THE USE OF A PRE-CAST CONCRETE MANHOLE OR MANHOLE RECONSTRUCTION AT THE DISCRETION OF THE PW DES CONSTRUCTION ENGINEERING FIELD INSPECTOR AND/OR PW DES CONSTRUCTION ENGINEERING ENGINEER.

15. CHANGES IN ELEVATION OR MODIFICATION TO EXISTING INLETS MAY REQUIRE RECONSTRUCTION AT THE DISCRETION OF THE PW DES CONSTRUCTION ENGINEERING INSPECTOR OR DES ENGINEER.

16. THE CONTRACTOR SHALL BE AWARE THAT WHEN DEBRIS IS DROPPED INTO PUBLIC MANHOLES AND OTHER PUBLIC STRUCTURES, THE CONTRACTOR IS TO IMMEDIATELY REMOVE THIS TO ELIMINATE THE POSSIBILITY OF PROPERTY DAMAGE DUE TO THE DEBRIS CAUSING BACKUP INTO PRIVATE PROPERTIES. IF IT IS DETERMINED THAT DEBRIS CAUSED A BACKUP, THE CONTRACTOR SHALL BE HELD RESPONSIBLE FOR DAMAGES.

17. THE CONTRACTOR SHALL MAKE SURE THAT ALL MANHOLES AND OTHER STRUCTURES ARE BUILT TO FINISHED GRADE.

18. NO TREES SHALL BE PLANTED WITHIN ANY SEWER EASEMENT OR WITHIN TEN (10) FEET OF ANY PUBLIC MANHOLES, PIPES OR INLETS.

19. $^{7}/_{32}$AS-BUILT$^{9}/_{32}$MYLAR DRAWINGS AND PRINTS ARE TO BE SUBMITTED TO PWPRS AT COMPLETION OF THE PROJECT. $^{7}/_{32}$ AS-BUILT$^{9}/_{32}$MYLAR DRAWINGS ARE TO BE REPRODUCIBLE COPIES (OR ORIGINALS) OF THE APPROVED CONSTRUCTION DRAWINGS. ANY FIELD CHANGES ARE TO BE NOTED. THE DRAWINGS WILL STATE $^{7}/_{32}$AS-BUILT$^{9}/_{32}$IN LARGE BLOCK LETTERS. THE $^{7}/_{32}$AS-BUILT$^{9}/_{32}$ MYLARS AND/OR PRINTS ARE TO BE SIGNED, DATED AND STAMPED BY A COLORADO REGISTERED ENGINEER.

20. AS-BUILT FIELD NOTES, FROM WHICH THE AS-BUILT DRAWINGS ARE PREPARED, ARE TO BE PROVIDED AND STAMPED/SIGNED AND DATED BY THE COLORADO REGISTERED PROFESSIONAL LAND SURVEYOR. THESE NOTES WILL INCLUDE THE STATIONING OF ANY BUILDING SEWER STUBS INSTALLED.

21. UPON COMPLETION OF SITE GRADING AND SEWER CONSTRUCTION, THE OWNER OR DEVELOPER SHALL BE RESPONSIBLE FOR FURNISHING THE PWPRS A CERTIFICATE OF INSPECTION PREPARED BY THE COLORADO REGISTERED ENGINEER WHO PERFORMED OR SUPERVISED CONSTRUCTION INSPECTION, CERTIFYING THAT:

A) A CONSTRUCTION INSPECTOR WAS ON THE JOB SITE AT ALL TIMES SEWER OR DRAINAGE FACILITY WORK WAS PERFORMED,
B) ALL STORM AND SANITARY SEWER FACILITIES, SITE GRADING, DETENTION POND GRADING AND OUTLET WORKS (IF ANY) WERE CONSTRUCTED IN COMPLIANCE WITH PLANS AND SPECIFICATIONS APPROVED BY THE DEPARTMENT OF PUBLIC WORKS
C) THE AS-BUILT DRAWINGS INCLUDED ACCURATELY DEPICT THE FINAL INSTALLATION OF THE STORM DRAINAGE AND/OR SEWER SYSTEM.

THIS CERTIFICATION SHALL BE REQUIRED FOR ALL STORM AND SANITARY SEWER FACILITIES IN ADDITION TO ANY INSPECTIONS MADE BY THE DIVISION OR THE DEPARTMENT OF PUBLIC WORKS.

22. DENVER WATER DEPARTMENT NOTE ALL PERSONS AND ENTITIES INVOLVED IN THIS PROJECT SHALL HAVE THE RESPONSIBILITY TO TAKE WHATEVER STEPS NECESSARY TO PROTECT ALL WATER FACILITIES. IF ANY WATER FACILITY CANNOT BE ADEQUATELY PROTECTED, THEN SAID WATER FACILITIES SHALL BE RELOCATED OR REMOVED IN ACCORDANCE WITH DENVER WATER DEPARTMENT REQUIREMENTS.

Karina 6:57:39 PM P:\9904.12 I-25 Santa Fe Alameda Interchange - FHU\16311\Hydraulics\Drawings\Phase 2\16311HYDR_PH2_Denver Water Notes.dgn
9/27/2010 CDOT-PDFHighQuality_XM.pltcfg

Print Date: 9/27/2010			
File Name: 16311HYDR_PH2_Denver Water Notes.dgn			
Horiz. Scale: 1:1	Vert. Scale: As Noted		
Unit Information	Unit Leader Initials		

MULLER ENGINEERING CO, INC
CONSULTING ENGINEERS
P: 9904.12 /16311/HYDRAULICS/Drawings
777 S. Wadsworth Blvd.
Suite 4-100
Lakewood, CO 80226
303-988-4939

Sheet Revisions		
Date:	Comments	Init.

Colorado Department of Transportation
2000 South Holly Street
Denver, CO 80222
Phone: 303-972-9112 FAX: 303-972-9114
Region 6 RLB

As Constructed	
No Revisions:	
Revised:	
Void:	

I-25/SANTA FE INTERCHANGE
DRAINAGE GENERAL NOTES
SHEET 2 OF 2

Designer:	JAY	Structure Numbers	
Detailer:	KSP		
Sheet Subset:	DRAINAGE	Subset Sheets:	2 of XX

Project No./Code	
IM 0254-394	
16311	
Sheet Number	385

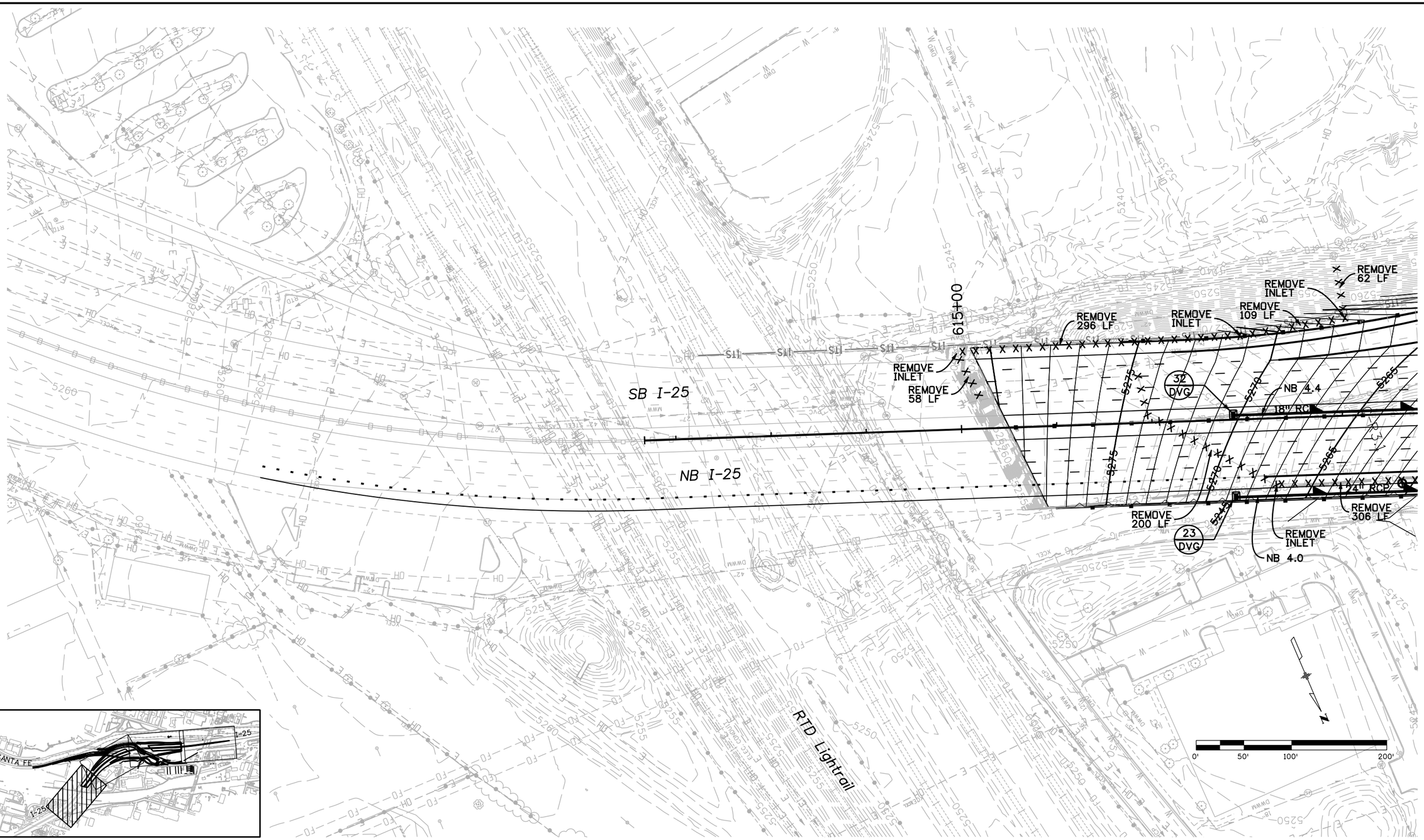

MAPKEY

Print Date: 9/27/2010
File Name: 16311_ME_HYDR_PH2_PLAN I25_01.dgn
Horiz. Scale: 1:100 Vert. Scale: As Noted
Unit Information Unit Leader Initials

MULLER ENGINEERING CO, INC
CONSULTING ENGINEERS
P: 9904.12 /16311/HYDRAULICS/Drawings
777 S. Wadsworth Blvd.
Suite 4-100
Lakewood, CO 80226
303-988-4939

Sheet Revisions		
Date:	Comments	Init.

Colorado Department of Transportation
2000 South Holly Street
Denver, CO 80222
Phone: 303-972-9112 FAX: 303-972-9114
Region 6 RLB

As Constructed
No Revisions:
Revised:
Void:

I-25/SANTA FE INTERCHANGE
I-25 DRAINAGE PLAN
SHEET 1 OF 4

Designer: JAM
Detailer: KSP
Structure Numbers
Sheet Subset: DRAINAGE
Subset Sheets: XXX of XX

Project No./Code
IM 0254-394
16311
Sheet Number 386

Korina 6:57:58 PM P:\9904.12 I-25 Santa Fe Alameda Interchange - FHU\16311\Hydraulics\Drawings\Phase 2\16311_ME_HYDR_PH2_PLAN I25_01.dgn
9/27/2010 CDOT-PDFHighQuality_XM.pltcfg 9904-CDOT-PenTable-4.00.tbl

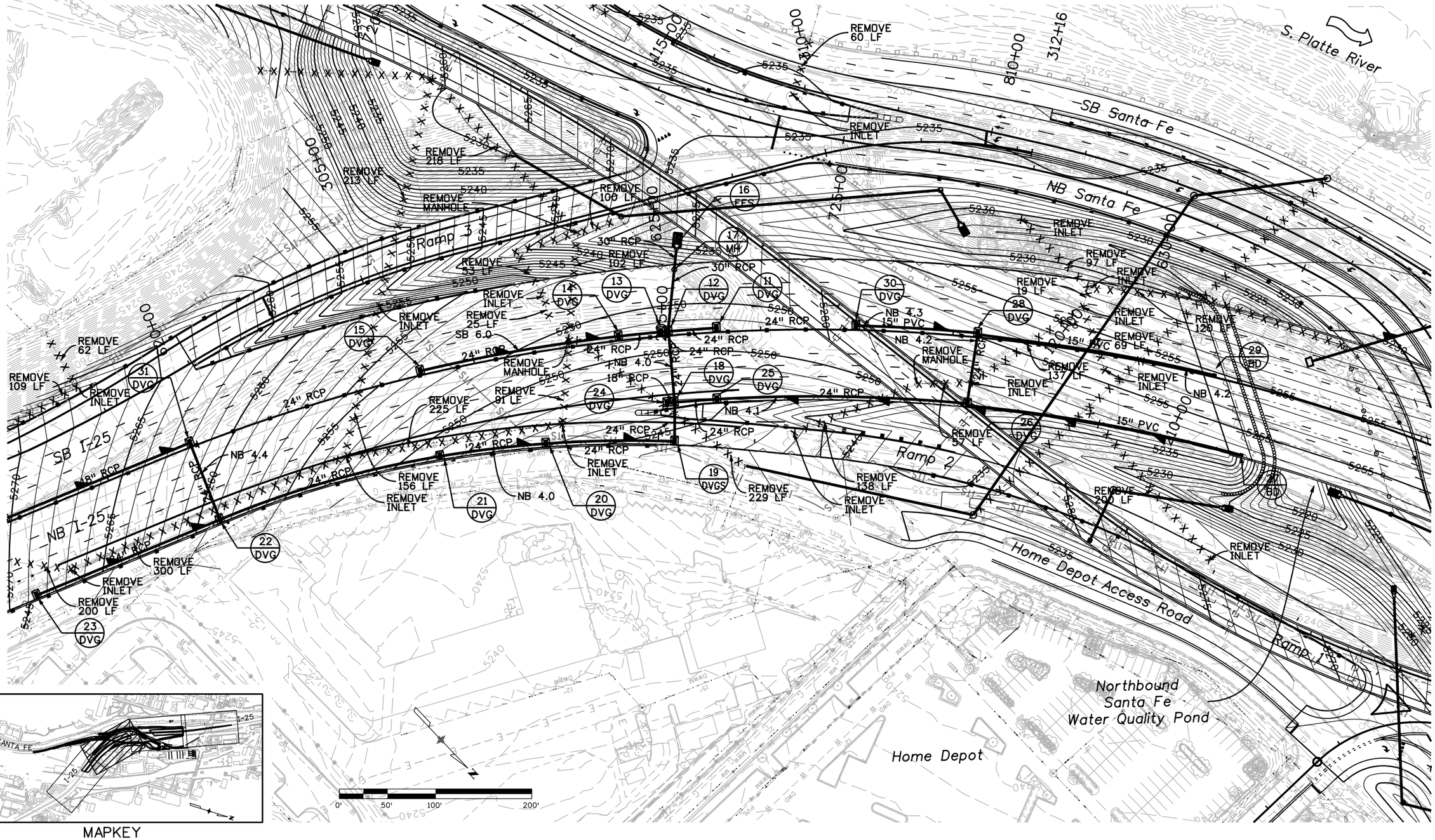

MAPKEY

Print Date: 9/27/2010		Sheet Revisions			Colorado Department of Transportation
File Name: 16311_ME_HYDR_PH2_PLAN I25_02.dgn		Date:	Comments	Init.	2000 South Holly Street Denver, CO 80222 Phone: 303-972-9112 FAX: 303-972-9114
Horiz. Scale: 1:100 Vert. Scale: As Noted					Region 6 RLB
Unit Information Unit Leader Initials					
MULLER ENGINEERING CO, INC CONSULTING ENGINEERS P: 9904.12 /16311/HYDRAULICS/Drawings	777 S. Wadsworth Blvd. Suite 4-100 Lakewood, CO 80226 303-988-4939				

As Constructed	I-25/SANTA FE INTERCHANGE I-25 DRAINAGE PLAN SHEET 2 OF 4			Project No./Code
No Revisions:				IM 0254-394
Revised:	Designer: JAM	Structure Numbers		16311
Void:	Detailer: KSP			Sheet Number 387
	Sheet Subset: DRAINAGE	Subset Sheets: XXX of XX		

Korina 6:58:35 PM P:\9904.12 I-25 Santa Fe Alameda Interchange - FHU\16311\Hydraulics\Drawings\Phase 2\16311_ME_HYDR_PH2_PLAN I25_02.dgn
9/27/2010 CDOT-PDFHighQuality_XM.pltcfg 9904-CDOT-PenTable-4.00.tbl

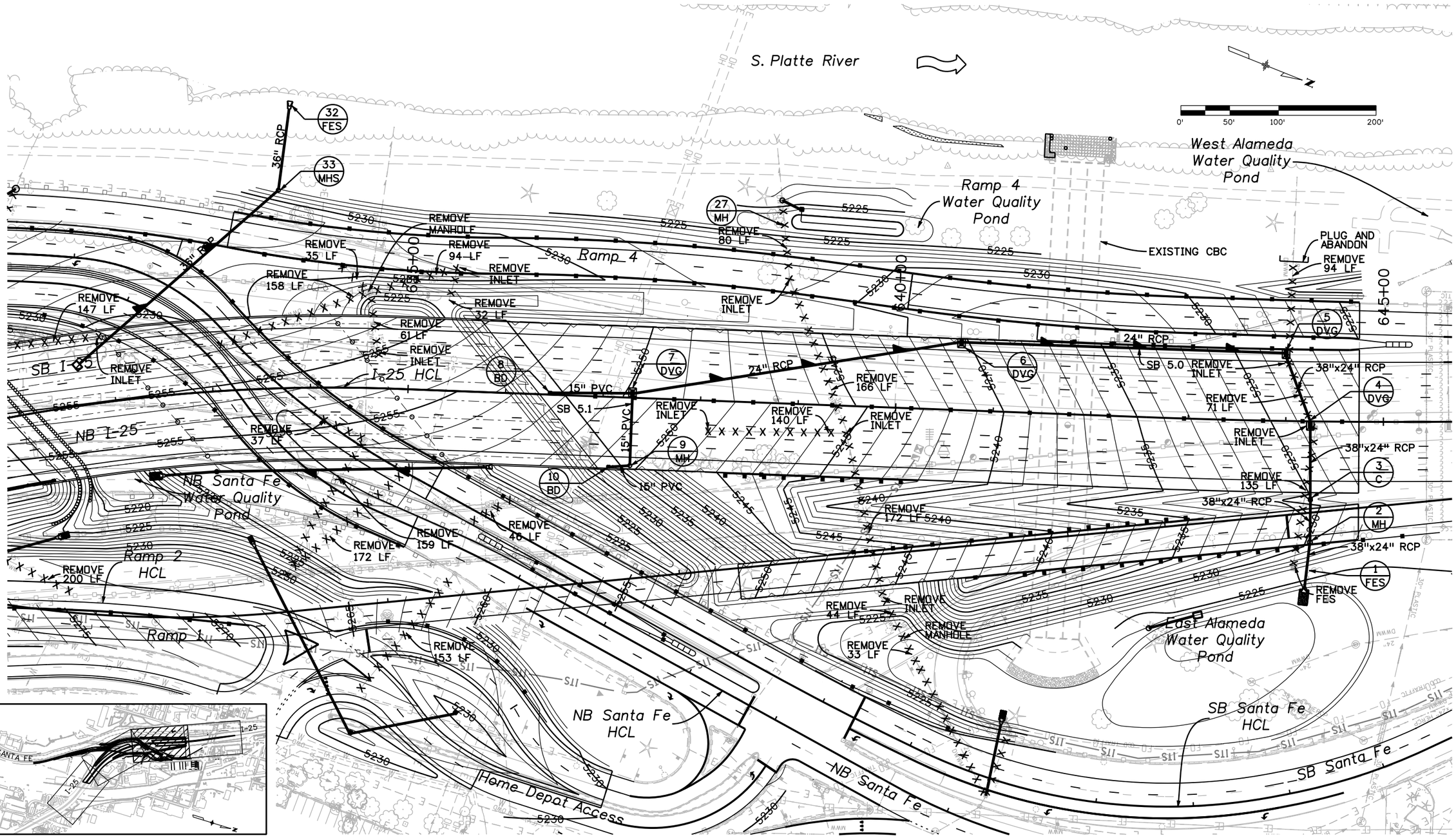

MAPKEY

Print Date: 9/27/2010	Sheet Revisions	Colorado Department of Transportation	As Constructed
File Name: 16311_ME_HYDR_PH2_PLAN I25_03.dgn	Date: / Comments / Init.	2000 South Holly Street Denver, CO 80222 Phone: 303-972-9112 FAX: 303-972-9114	No Revisions:
Horiz. Scale: 1:100 Vert. Scale: As Noted		Region 6 RLB	Revised:
Unit Information Unit Leader Initials			Void:

MULLER ENGINEERING CO, INC
CONSULTING ENGINEERS
777 S. Wadsworth Blvd.
Suite 4-100
Lakewood, CO 80226
303-988-4939
P: 9904.12 /16311/HYDRAULICS/Drawings

I-25/SANTA FE INTERCHANGE
I-25 DRAINAGE PLAN
SHEET 3 OF 4

Designer:	JAM	Structure Numbers	
Detailer:	KSP		
Sheet Subset:	DRAINAGE	Subset Sheets:	XXX of XX

Project No./Code
IM 0254-394
16311
Sheet Number 388

Korina 6:59:22 PM P:\9904.12 I-25 Santa Fe Alameda Interchange - FHU\16311\Hydraulics\Drawings\Phase 2\16311_ME_HYDR_PH2_PLAN 125_03.dgn
9/27/2010 CDOT-PDFHighQuality_XM.pltcfg 9904-CDOT-PenTable-4.00.tbl

S. Platte River

West Alameda Water Quality Pond

645+00

650+00

655+00

SB I-25

NB I-25

Ramp 1

East Alameda Water Quality Pond

630+00

SB Santa Fe

Alameda Avenue

Kalamath

0' 50' 100' 200'

MAPKEY

SANTA FE

I-25

Print Date: 9/27/2010		Sheet Revisions	
File Name: 16311_ME_HYDR_PH2_PLAN I25_04.dgn		Date:	Comments
Horiz. Scale: 1:100	Vert. Scale: As Noted		
Unit Information	Unit Leader Initials		

MULLER ENGINEERING CO, INC
CONSULTING ENGINEERS
777 S. Wadsworth Blvd.
Suite 4-100
Lakewood, CO 80226
303-988-4939
P: 9904.12 /16311/HYDRAULICS/Drawings

Colorado Department of Transportation
DEPARTMENT OF TRANSPORTATION
2000 South Holly Street
Denver, CO 80222
Phone: 303-972-9112 FAX: 303-972-9114
Region 6 RLB

As Constructed
No Revisions:
Revised:
Void:

I-25/SANTA FE INTERCHANGE
I-25 DRAINAGE PLAN
SHEET 4 OF 4

Designer: JAM
Detailer: KSP
Sheet Subset: DRAINAGE
Structure Numbers:
Subset Sheets: XXX of XX

Project No./Code
IM 0254-394
16311
Sheet Number 389

Korina 7:00:07 PM P:\9904.12 I-25 Santa Fe Alameda Interchange - FHU\16311\Hydraulics\Drawings\Phase 2\16311_ME_HYDR_PH2_PLAN I25_04.dgn
9/27/2010 CDOT-PDFHighQuality_XM.pltcfg 9904-CDOT-PenTable-4.00.tbl

SB Santa Fe

NB Santa Fe

S. Platte River

NORTHBOUND
SANTA FE HCL

705+00

0' 50' 100' 200'

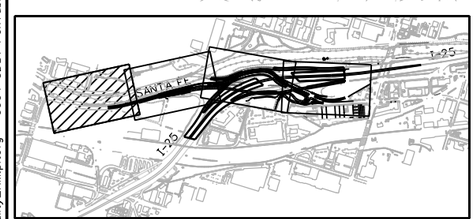

MAPKEY

Korina 7:01:06 PM P:\9904.12 I-25 Santa Fe Alameda Interchange - FHU\16311\Hydraulics\Drawings\Phase 2\16311_ME_HYDR_PH2_PLAN SantaFe_01.dgn
9/27/2010 CDOT-PDFHighQuality_XM.pltcfg 9904-CDOT-PenTable-4.00.tbl

Print Date: 9/27/2010			
File Name: 16311_ME_HYDR_PH2_PLAN SantaFe_01.dgn			
Horiz. Scale: 1:100	Vert. Scale: As Noted		
Unit Information	Unit Leader Initials		

MULLER ENGINEERING CO, INC
CONSULTING ENGINEERS
P: 9904.12 /16311/HYDRAULICS/Drawings
777 S. Wadsworth Blvd.
Suite 4-100
Lakewood, CO 80226
303-988-4939

Sheet Revisions		
Date:	Comments	Init.

Colorado Department of Transportation
DEPARTMENT OF TRANSPORTATION
2000 South Holly Street
Denver, CO 80222
Phone: 303-972-9112 FAX: 303-972-9114
Region 6 RLB

As Constructed
No Revisions:
Revised:
Void:

I-25/SANTA FE INTERCHANGE
SANTA FE DRAINAGE PLAN
SHEET 1 OF 4

Designer:	JAM	Structure Numbers	
Detailer:	JHK		
Sheet Subset:	DRAINAGE	Subset Sheets:	XXX of XX

Project No./Code
IM 0254-394
16311
Sheet Number 390

SB Santa Fe

S. Platte River

NB Santa Fe

SANTA FE 2.1

SANTA FE 2.0

Ramp 1

Ramp 3

SB I-25

710+00

720+00

730+00

PLUG AND ABANDON PIPE

REMOVE 75 LF

REMOVE 297 LF

REMOVE INLET

REMOVE 25 LF

REMOVE 66 LF

REMOVE MANHOLE

REMOVE 24 LF

REMOVE 218 LF

REMOVE 173 LF

REMOVE 80 LF

REMOVE MANHOLE

REMOVE 137 LF

18" RCP

24" RCP

24"x14" RCP

30" RCP

39 DVG

38 16

37 MHS

36 FES

35 FES

0' 50' 100' 200'

MAPKEY

SANTA FE

I-25

I-25

Korina 7:01:36 PM P:\9904.12 I-25 Santa Fe Alameda Interchange - FHU\16311\Hydraulics\Drawings\Phase 2\16311_ME_HYDR_PH2_PLAN SantaFe_02.dgn
9/27/2010 CDOT-PDFHighQuality_XM.pltcfg 9904-CDOT-PenTable-4.00.tbl

Print Date: 9/27/2010	Sheet Revisions	Colorado Department of Transportation	As Constructed
File Name: 16311_ME_HYDR_PH2_PLAN SantaFe_02.dgn	Date: / Comments / Init.	2000 South Holly Street, Denver, CO 80222	No Revisions:
Horiz. Scale: 1:100 Vert. Scale: As Noted		Phone: 303-972-9112 FAX: 303-972-9114	Revised:
Unit Information Unit Leader Initials		Region 6 RLB	Void:
MULLER ENGINEERING CO, INC CONSULTING ENGINEERS, 777 S. Wadsworth Blvd. Suite 4-100 Lakewood, CO 80226 303-988-4939			
P: 9904.12 /16311/HYDRAULICS/Drawings			

I-25/SANTA FE INTERCHANGE SANTA FE DRAINAGE PLAN SHEET 2 OF 4			Project No./Code
Designer:	Structure Numbers		IM 0254-394
Detailer: JHK			16311
Sheet Subset: DRAINAGE	Subset Sheets: 2 of 4		Sheet Number 391

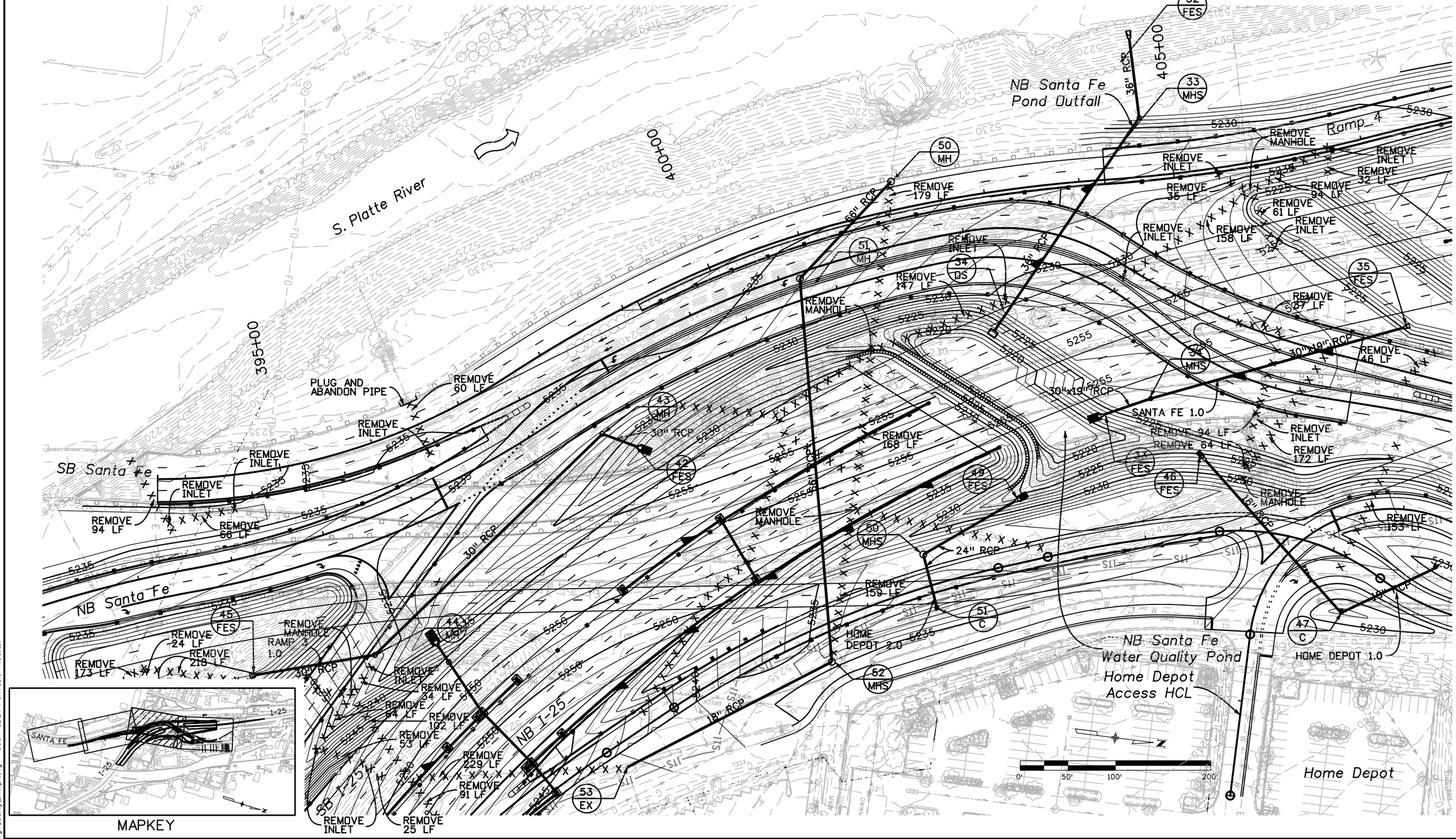

Print Date: 9/27/2010
File Name: 16311_ME_HYDR_PH2_PLAN SantaFe_03.dgn
Horiz. Scale: 1:100 Vert. Scale: As Noted
Unit Information Unit Leader Initials

MULLER ENGINEERING CO, INC
CONSULTING ENGINEERS
P: 9904.12 /16311/HYDRAULICS/Drawings
777 S. Wadsworth Blvd.
Suite 4-100
Lakewood, CO 80226
303-988-4939

Sheet Revisions		
Date:	Comments	Init.

Colorado Department of Transportation
DOT DEPARTMENT OF TRANSPORTATION
2000 South Holly Street
Denver, CO 80222
Phone: 303-972-9112 FAX: 303-972-9114
Region 6 RLB

As Constructed
No Revisions:
Revised:
Void:

I-25/SANTA FE INTERCHANGE
SANTA FE DRAINAGE PLAN
SHEET 3 OF 4

Designer: JAM
Detailer: JHK
Structure Numbers
Sheet Subset: DRAINAGE
Subset Sheets: 3 of 4

Project No./Code
IM 0254-394
16311
Sheet Number 392

Korina 7:02:13 PM P:\9904.12 I-25 Santa Fe Alameda Interchange - FHU\16311\Hydraulics\Drawings\Phase 2\16311_ME_HYDR_PH2_PLAN SantaFe_03.dgn
9/27/2010 CDOT-PDFHighQuality_XM.pltcfg 9904-CDOT-PenTable-4.00.tbl

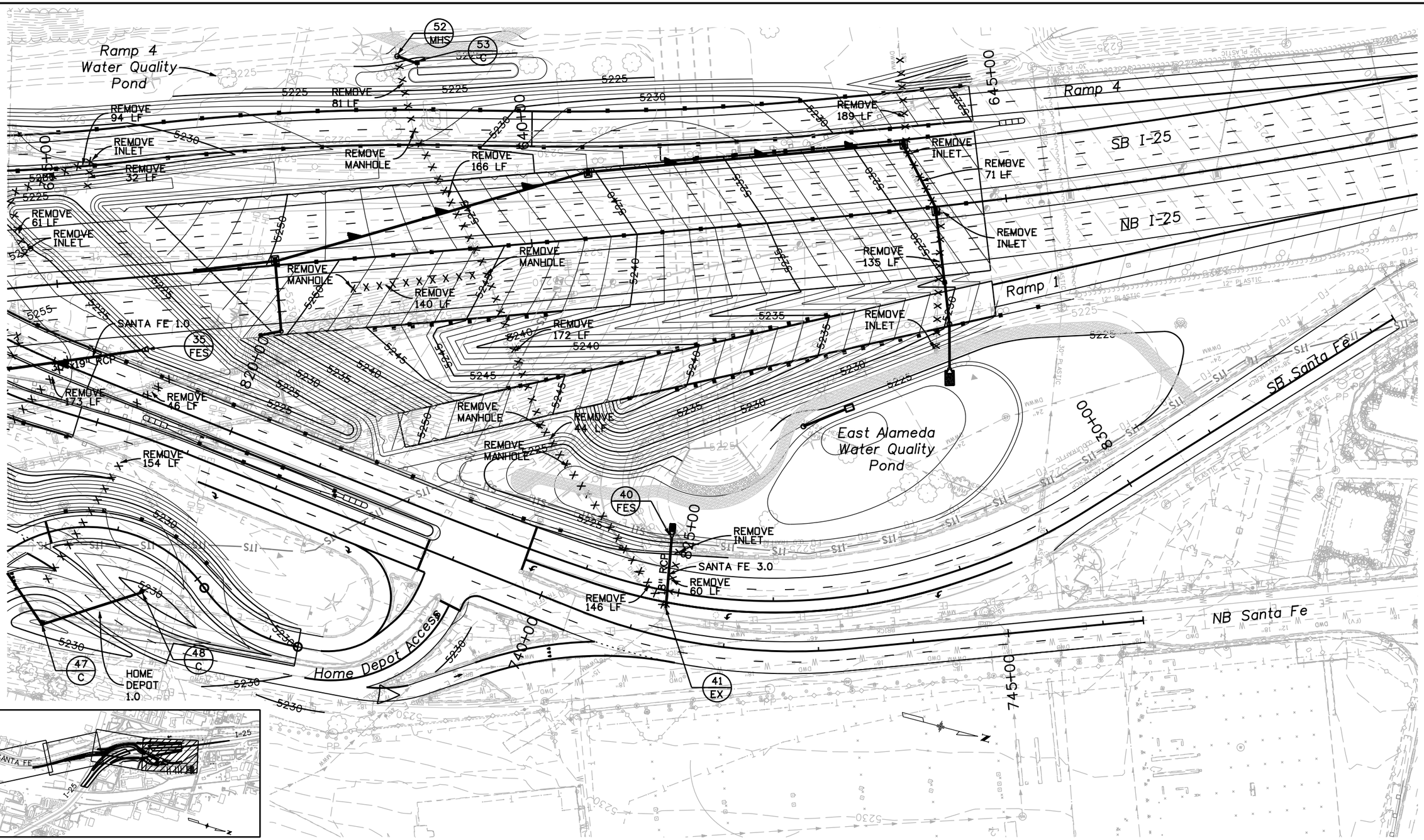

Print Date: 9/27/2010		Sheet Revisions			Colorado Department of Transportation	As Constructed	I-25/SANTA FE INTERCHANGE SANTA FE DRAINAGE PLAN SHEEET 4 OF 4	Project No./Code
File Name: 16311_ME_HYDR_PH2_PLAN SantaFe_04.dgn		Date:	Comments	Init.	2000 South Holly Street Denver, CO 80222 Phone: 303-972-9112 FAX: 303-972-9114	No Revisions:		IM 0254-394
Horiz. Scale: 1:100 Vert. Scale: As Noted						Revised:	Designer: JAM / Detailer: JHK / Sheet Subset: DRAINAGE / Structure Numbers / Subset Sheets: 4 of 4	16311
Unit Information Unit Leader Initials					Region 6 RLB	Void:		Sheet Number 393
MULLER ENGINEERING CO, INC CONSULTING ENGINEERS P: 9904.12 /16311/HYDRAULICS/Drawings	777 S. Wadsworth Blvd. Suite 4-100 Lakewood, CO 80226 303-988-4939							

Korina 7:03:03 PM P:\9904.12 I-25 Santa Fe Alameda Interchange - FHU\16311\Hydraulics\Drawings\Phase 2\16311_ME_HYDR_PH2_PLAN SantaFe_04.dgn 9/27/2010 CDOT-PDF-HighQuality_XM.pltcfg 9904-CDOT-PenTable-4.00.tbl

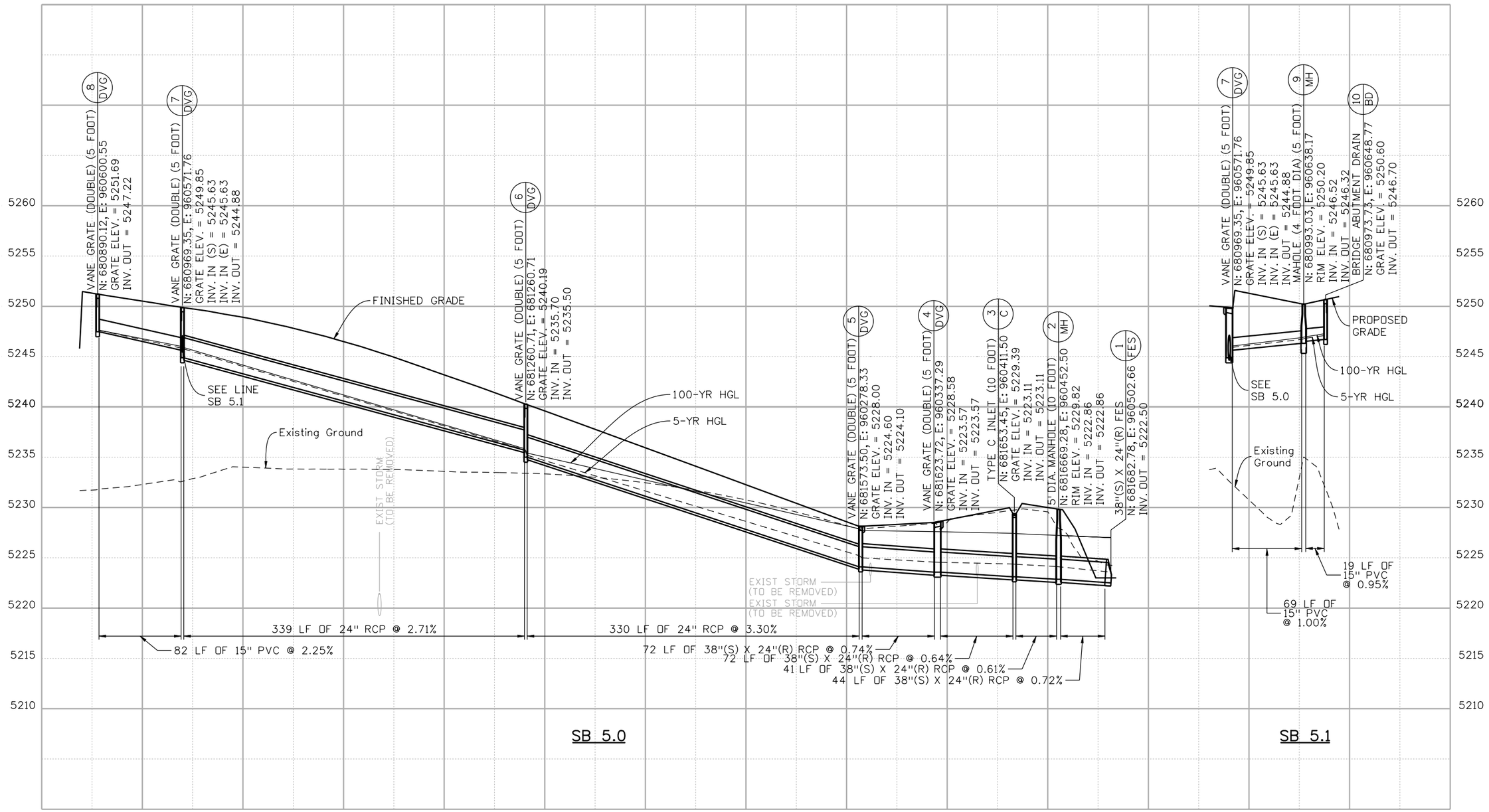

Karina 7:04:06 PM P:\9904.12 I-25 Santa Fe Alameda Interchange - FHU\16311\Hydraulics\Drawings\Phase 2\16311HYDR_PH2_PR001.dgn
9/27/2010 CDOT-PDFHighQuality_XM.pltcfg 9904-CDOT-PenTable-4.00.tbl

Print Date: 9/27/2010
File Name: 16311HYDR_PH2_PR001.dgn
Horiz. Scale: 1:100 Vert. Scale: As Noted
Unit Information Unit Leader Initials

MULLER ENGINEERING CO, INC
CONSULTING ENGINEERS
P: 9904.12 /16311/HYDRAULICS/Drawings
777 S. Wadsworth Blvd.
Suite 4-100
Lakewood, CO 80226
303-988-4939

Sheet Revisions		
Date:	Comments	Init.

Colorado Department of Transportation
DEPARTMENT OF TRANSPORTATION
2000 South Holly Street
Denver, CO 80222
Phone: 303-972-9112 FAX: 303-972-9114
Region 6 RLB

As Constructed
No Revisions:
Revised:
Void:

I-25/SANTA FE INTERCHANGE DRAINAGE PROFILES SHEET 1 OF 8

Designer: JAM
Detailer: KSP
Sheet Subset: DRAINAGE
Structure Numbers:
Subset Sheets: XXX of XX

Project No./Code
IM 0254-394
16311
Sheet Number 394

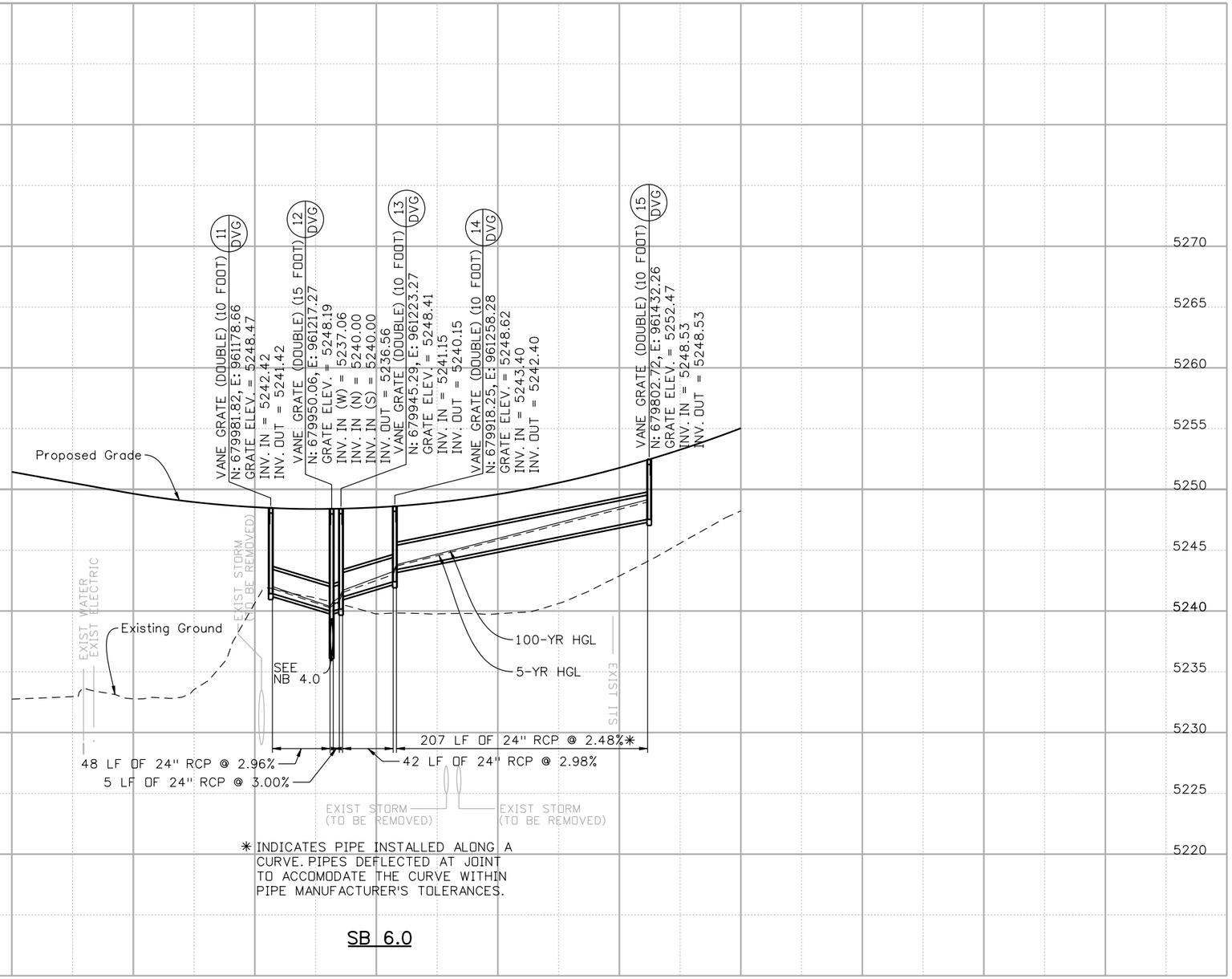

* INDICATES PIPE INSTALLED ALONG A CURVE. PIPES DEFLECTED AT JOINT TO ACCOMODATE THE CURVE WITHIN PIPE MANUFACTURER'S TOLERANCES.

SB 6.0

Korina 7:04:14 PM P:\9904.12 I-25 Santa Fe Alameda Interchange - FHU\16311\Hydraulics\Drawings\Phase 2\16311HYDR_PH2_PR002.dgn
9/27/2010 CDOT-PDFHighQuality_XM.pltcfg 9904-CDOT-PenTable-4.00.tbl

Print Date: 9/27/2010
File Name: 16311HYDR_PH2_PR002.dgn
Horiz. Scale: 1:100 Vert. Scale: As Noted
Unit Information Unit Leader Initials

MULLER ENGINEERING CO, INC
CONSULTING ENGINEERS
P: 9904.12 /16311/HYDRAULICS/Drawings
777 S. Wadsworth Blvd.
Suite 4-100
Lakewood, CO 80226
303-988-4939

Sheet Revisions		
Date:	Comments	Init.

Colorado Department of Transportation
2000 South Holly Street
Denver, CO 80222
Phone: 303-972-9112 FAX: 303-972-9114
Region 6 RLB

As Constructed
No Revisions:
Revised:
Void:

I-25/SANTA FE INTERCHANGE
DRAINAGE PROFILES
SHEET 2 OF 8

Designer: JAM
Detailer: KSP
Sheet Subset: DRAINAGE
Structure Numbers:
Subset Sheets: XXX of XX

Project No./Code
IM 0254-394
16311
Sheet Number 395

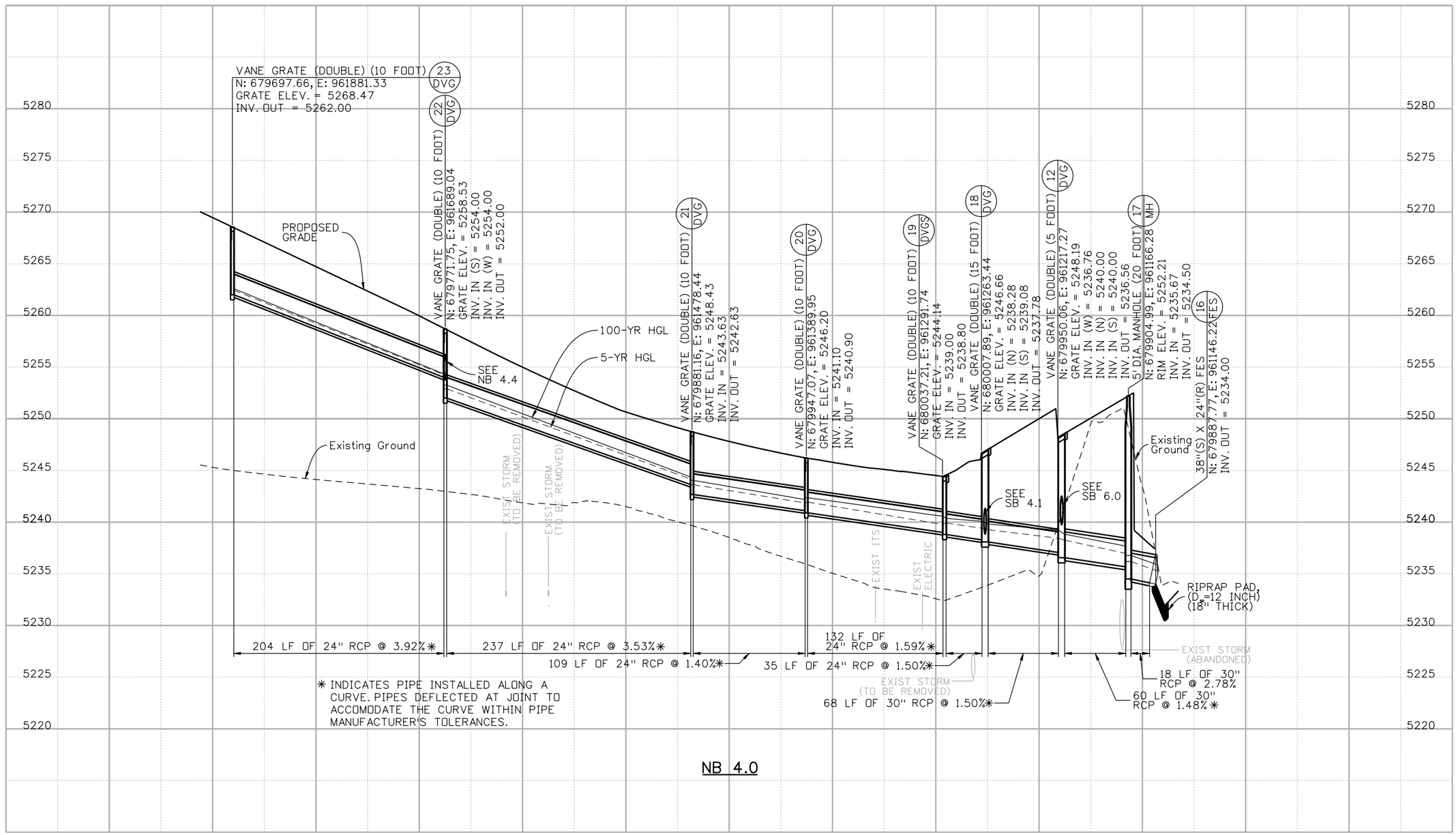

NB 4.0

Karina 7:04:21 PM P:\9904.12 I-25 Santa Fe Alameda Interchange - FHU\16311\Hydraulics\Drawings\Phase 2\16311HYDR_PH2_PR003.dgn
9/27/2010 CDOT-PDFHighQuality_XM.pltcfg 9904-CDOT-PenTable-4.00.tbl

Print Date: 9/27/2010			
File Name: 16311HYDR_PH2_PR003.dgn			
Horiz. Scale: 1:100	Vert. Scale: As Noted		
Unit Information	Unit Leader Initials		

MULLER ENGINEERING CO, INC
CONSULTING ENGINEERS
P: 9904.12 /16311/HYDRAULICS/Drawings
777 S. Wadsworth Blvd.
Suite 4-100
Lakewood, CO 80226
303-988-4939

Sheet Revisions		
Date:	Comments	Init.

Colorado Department of Transportation
DEPARTMENT OF TRANSPORTATION
2000 South Holly Street
Denver, CO 80222
Phone: 303-972-9112 FAX: 303-972-9114
Region 6 RLB

As Constructed
No Revisions:
Revised:
Void:

I-25/SANTA FE INTERCHANGE
DRAINAGE PROFILES
SHEET 3 OF 8

Designer:	JAM	Structure Numbers	
Detailer:	KSP		
Sheet Subset:	DRAINAGE	Subset Sheets:	XXX of XX

Project No./Code
IM 0254-394
16311
Sheet Number 396

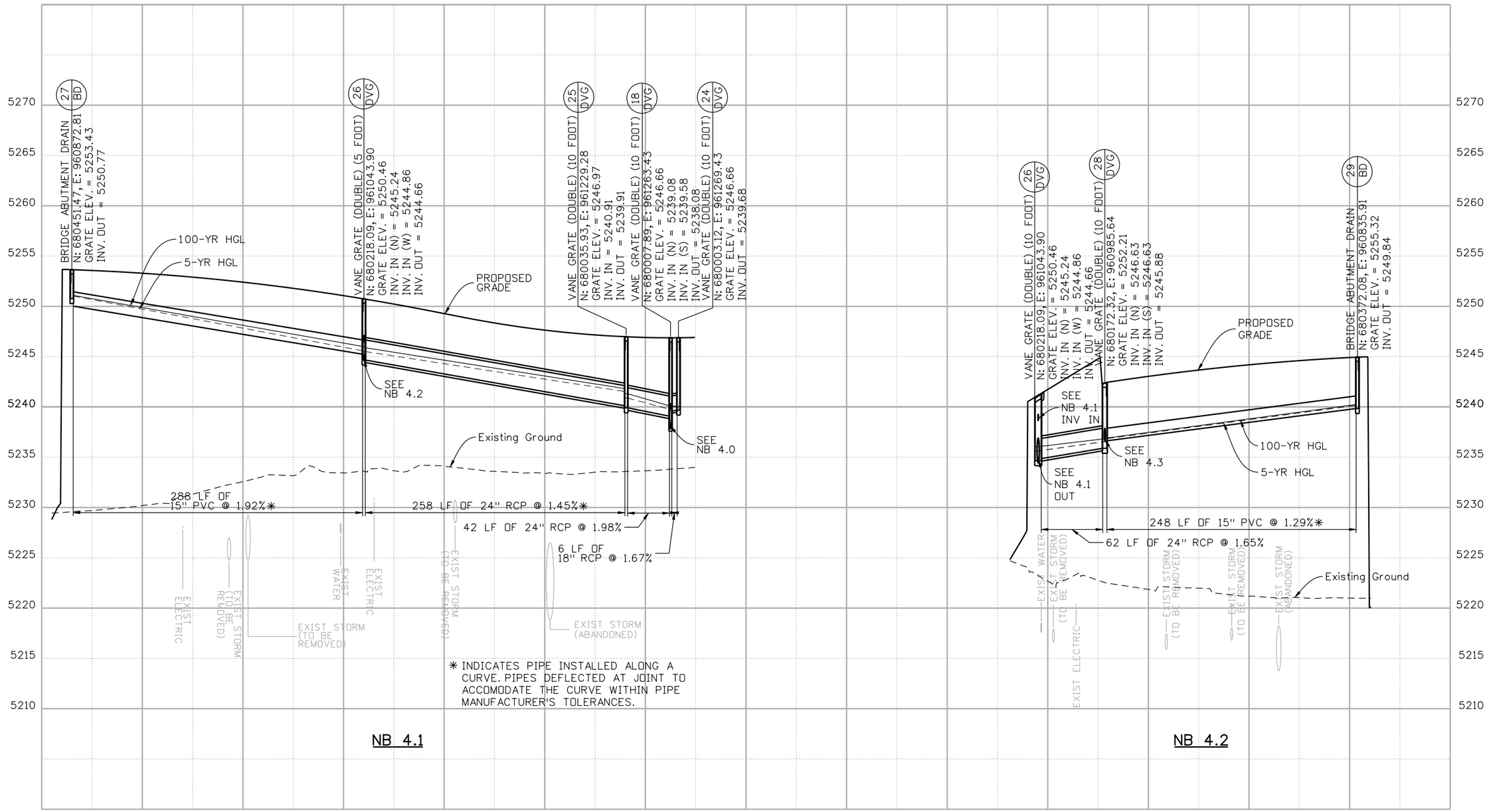

Korina 7:04:29 PM P:\9904.12 I-25 Santa Fe Alameda Interchange - FHU\16311\Hydraulics\Drawings\Phase 2\16311HYDR_PH2_PR004.dgn
9/27/2010 CDOT-PDFHighQuality_XM.pltcfg 9904-CDOT-PenTable-4.00.tbl

Print Date: 9/27/2010
File Name: 16311HYDR_PH2_PR004.dgn
Horiz. Scale: 1:100 Vert. Scale: As Noted
Unit Information Unit Leader Initials

MULLER ENGINEERING CO, INC
CONSULTING ENGINEERS
P: 9904.12 /16311/HYDRAULICS/Drawings
777 S. Wadsworth Blvd.
Suite 4-100
Lakewood, CO 80226
303-988-4939

Sheet Revisions		
Date:	Comments	Init.

Colorado Department of Transportation
DEPARTMENT OF TRANSPORTATION
2000 South Holly Street
Denver, CO 80222
Phone: 303-972-9112 FAX: 303-972-9114
Region 6 RLB

As Constructed
No Revisions:
Revised:
Void:

I-25/SANTA FE INTERCHANGE
DRAINAGE PROFILES
SHEET 4 OF 8

Designer: JAM
Detailer: KSP
Sheet Subset: DRAINAGE
Structure Numbers:
Subset Sheets: XXX of XX

Project No./Code
IM 0254-394
16311
Sheet Number 397

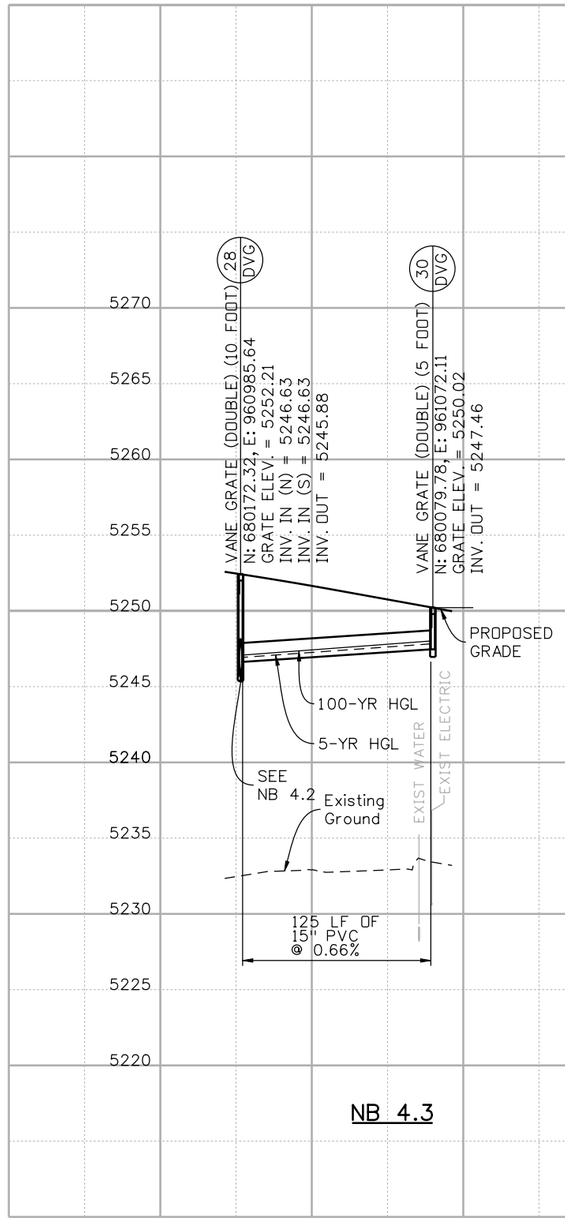

NB 4.3

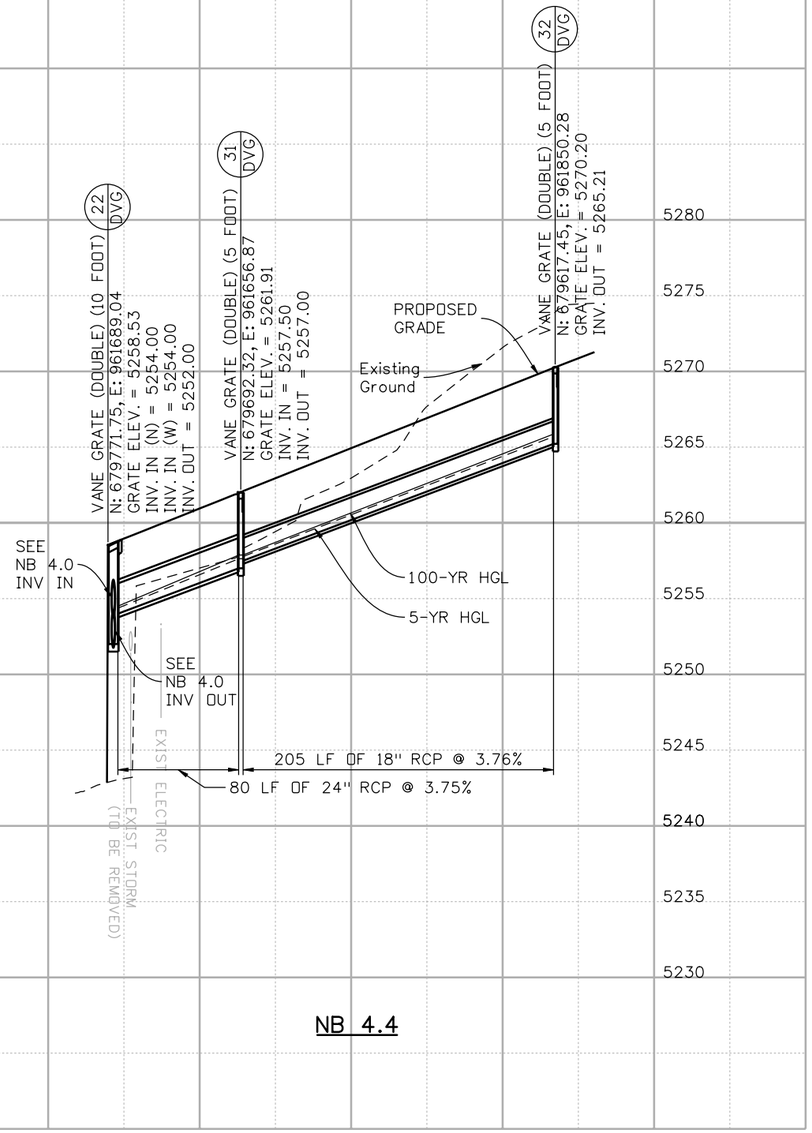

NB 4.4

Korina 7:04:37 PM P:\9904.12 I-25 Santa Fe Alameda Interchange - FHU\16311\Hydraulics\Drawings\Phase 2\16311HYDR_PH2_PR005.dgn
9/27/2010 CDOT-PDFHighQuality_XM.pltcfg 9904-CDOT-PenTable-4.00.tbl

Print Date: 9/27/2010
File Name: 16311HYDR_PH2_PR005.dgn
Horiz. Scale: 1:100 Vert. Scale: As Noted
Unit Information Unit Leader Initials

MULLER ENGINEERING CO, INC
CONSULTING ENGINEERS
P: 9904.12 /16311/HYDRAULICS/Drawings
777 S. Wadsworth Blvd.
Suite 4-100
Lakewood, CO 80226
303-988-4939

Sheet Revisions

Date:	Comments	Init.

Colorado Department of Transportation
DEPARTMENT OF TRANSPORTATION
2000 South Holly Street
Denver, CO 80222
Phone: 303-972-9112 FAX: 303-972-9114
Region 6 RLB

As Constructed

No Revisions:
Revised:
Void:

I-25/SANTA FE INTERCHANGE
DRAINAGE PROFILES
SHEET 5 OF 8

Designer: JAM
Detailer: KSP
Sheet Subset: DRAINAGE
Structure Numbers:
Subset Sheets: XXX of XX

Project No./Code
IM 0254-394
16311
Sheet Number 398

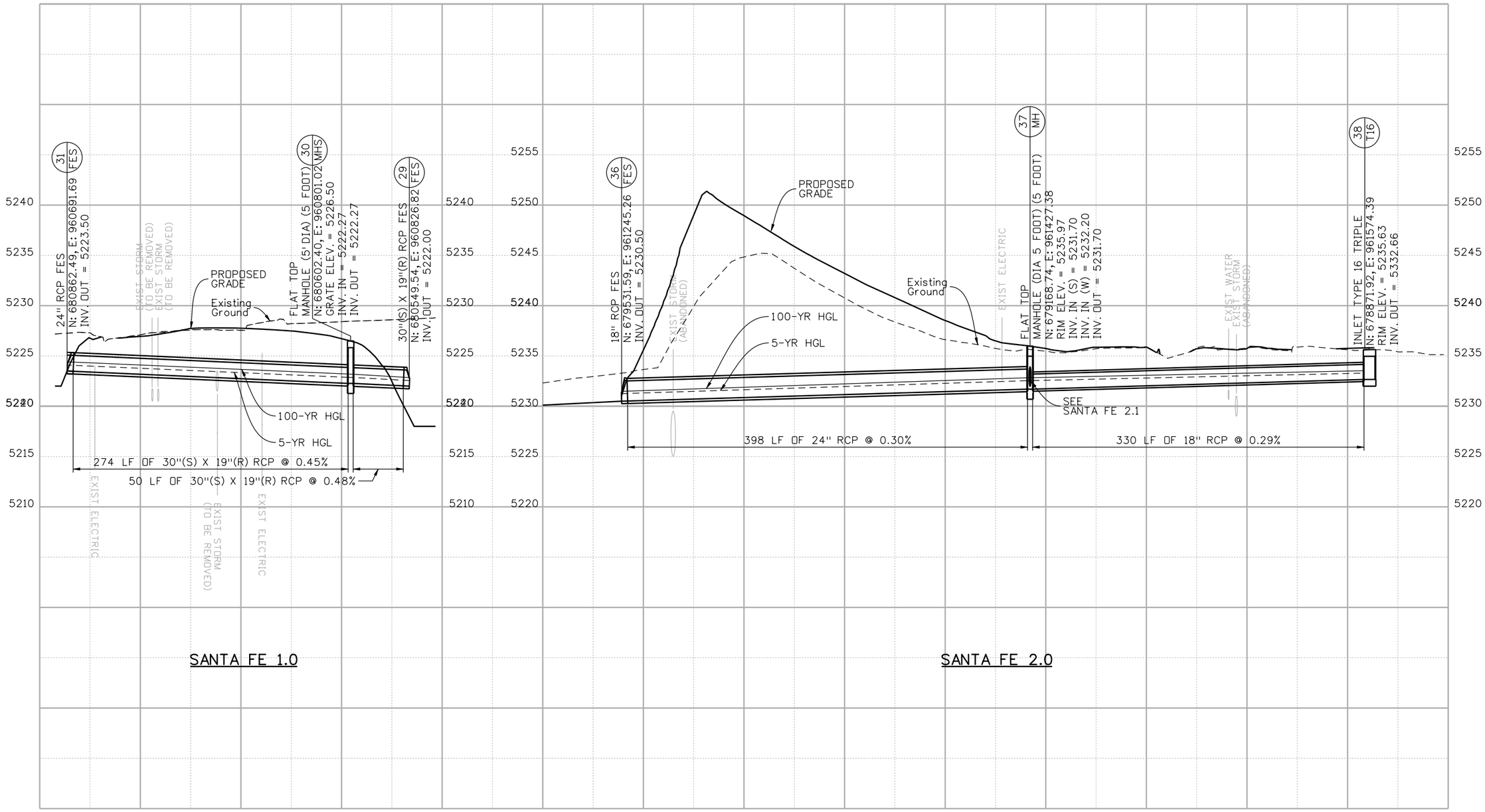

Korina 7:04:43 PM P:\9904.12 I-25 Santa Fe Alameda Interchange - FHU\16311\Hydraulics\Drawings\Phase 2\16311HYDR_PH2_PR006.dgn
9/27/2010 CDOT-PDFHighQuality_XM.pltcfg 9904-CDOT-PenTable-4.00.tbl

Print Date: 9/27/2010
File Name: 16311HYDR_PH2_PR006.dgn
Horiz. Scale: 1:100 Vert. Scale: As Noted
Unit Information Unit Leader Initials

MULLER ENGINEERING CO, INC
CONSULTING ENGINEERS
P: 9904.12 /16311/HYDRAULICS/Drawings
777 S. Wadsworth Blvd.
Suite 4-100
Lakewood, CO 80226
303-988-4939

Sheet Revisions

Date:	Comments	Init.

Colorado Department of Transportation
DOT DEPARTMENT OF TRANSPORTATION
2000 South Holly Street
Denver, CO 80222
Phone: 303-972-9112 FAX: 303-972-9114
Region 6 RLB

As Constructed
No Revisions:
Revised:
Void:

I-25/SANTA FE INTERCHANGE
DRAINAGE PROFILES
SHEET 6 OF 8

Designer: JAM
Detailer: KSP
Sheet Subset: DRAINAGE
Structure Numbers
Subset Sheets: XXX of XX

Project No./Code
IM 0254-394
16311
Sheet Number 399

NOTES:
PIPE SIZE REPLACES EXISTING SYSTEM'S CURRENT CONFIGURATION. NO FLOW RATE/HGL COMPUTED.

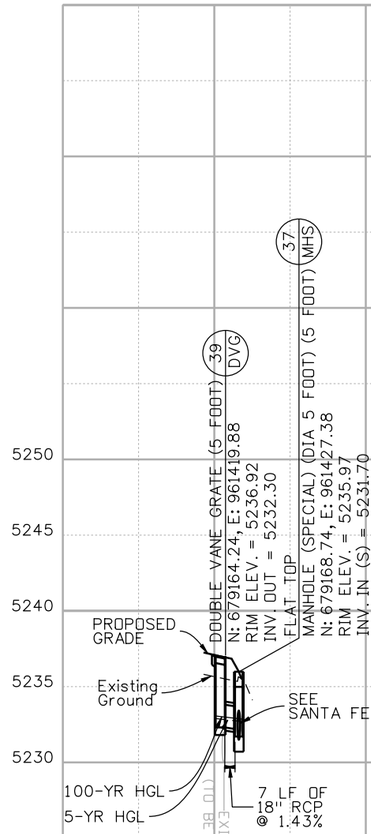

SANTA FE 2.1

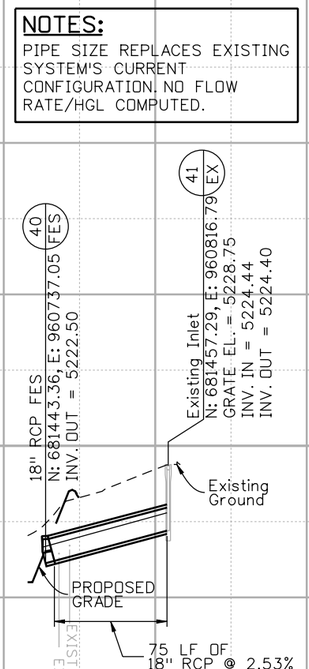

SANTA FE 3.0

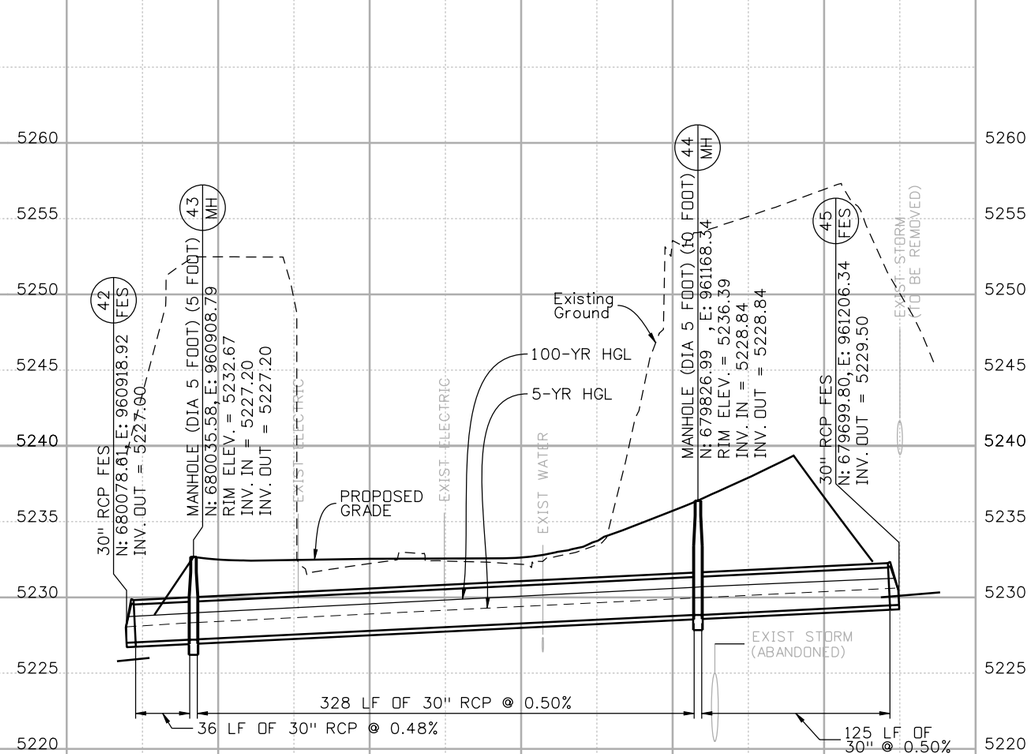

RAMP 3 1.0

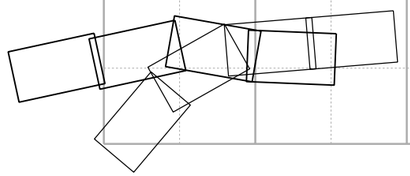

Korina 7:04:50 PM P:\9904.12 I-25 Santa Fe Alameda Interchange - FHU\16311 Hydraulics\Drawings\Phase 2\16311HYDR_PH2_PR007.dgn 9/27/2010
CDOT-PDFHighQuality_XM.pltcfg 9904-CDOT-PenTable-4.00.tbl

Print Date: 9/27/2010	Sheet Revisions	Colorado Department of Transportation	As Constructed
File Name: 16311HYDR_PH2_PR007.dgn	Date: / Comments / Init.	2000 South Holly Street, Denver, CO 80222	No Revisions:
Horiz. Scale: 1:100 Vert. Scale: As Noted		Phone: 303-972-9112 FAX: 303-972-9114	Revised:
Unit Information Unit Leader Initials		Region 6 RLB	Void:

MULLER ENGINEERING CO, INC
CONSULTING ENGINEERS
777 S. Wadsworth Blvd.
Suite 4-100
Lakewood, CO 80226
303-988-4939
P: 9904.12 /16311/HYDRAULICS/Drawings

I-25/SANTA FE INTERCHANGE DRAINAGE PROFILES SHEET 7 OF 8			Project No./Code
Designer: JAM	Structure Numbers		IM 0254-394
Detailer: KSP			16311
Sheet Subset: DRAINAGE	Subset Sheets: XXX of XX		Sheet Number 400

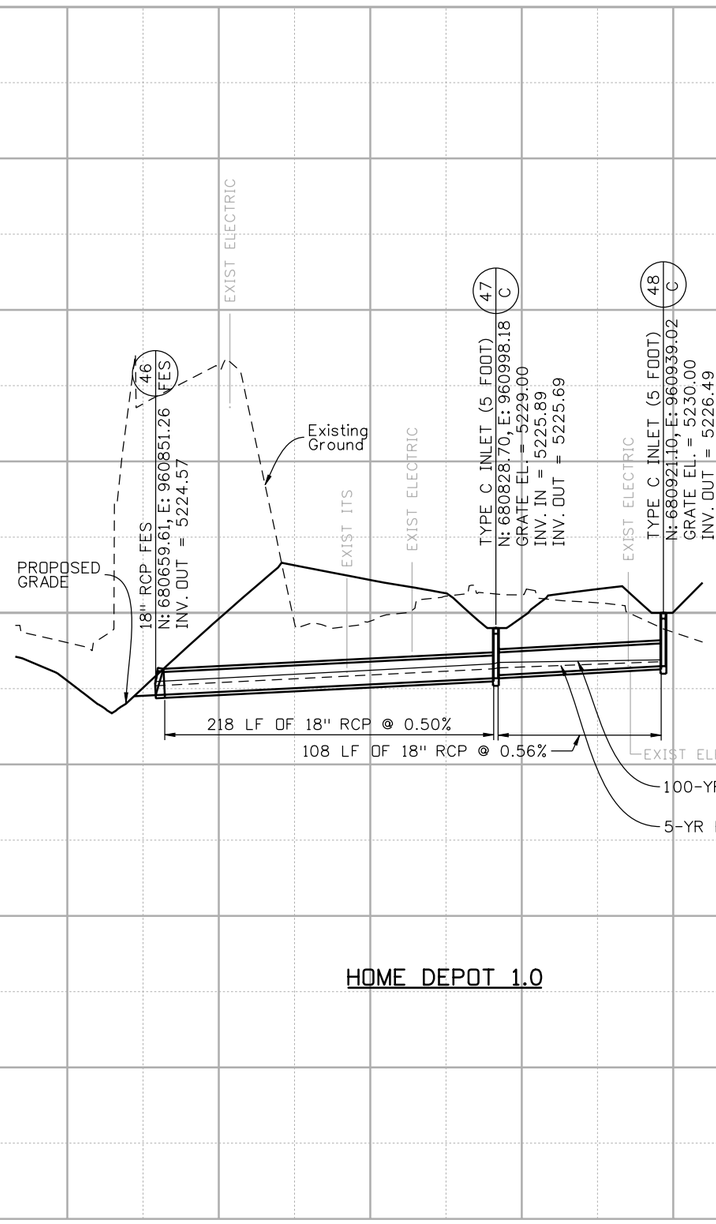

HOME DEPOT 1.0

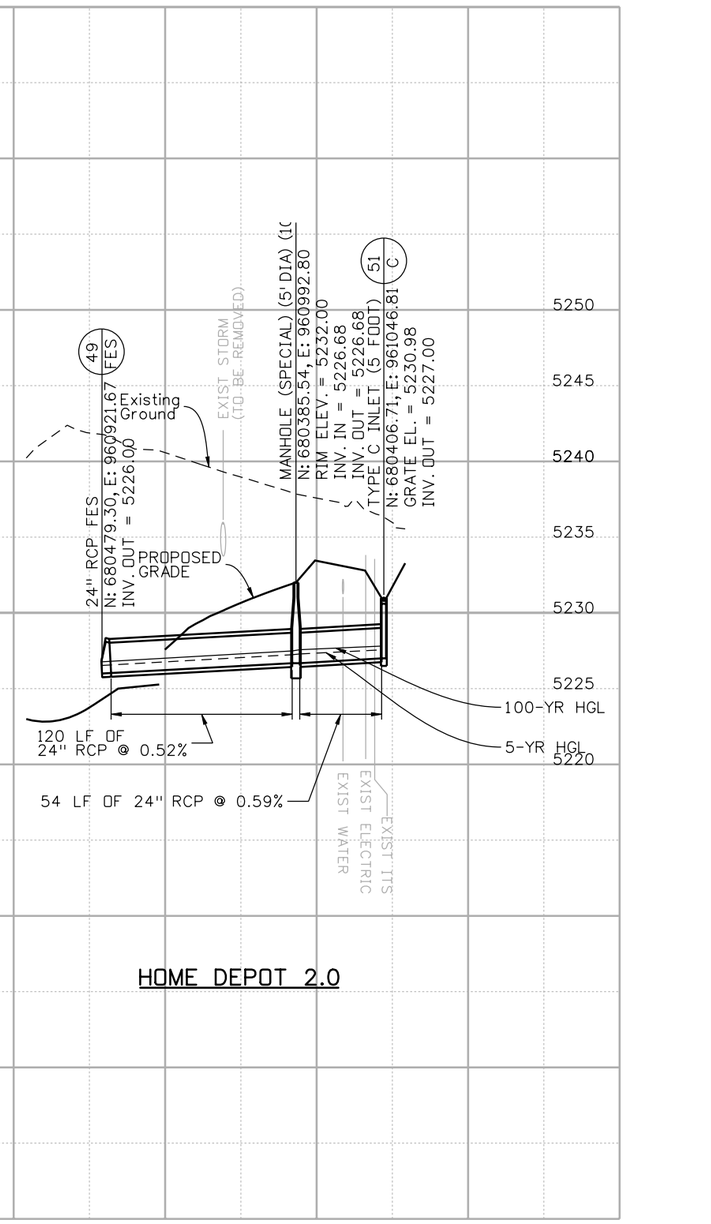

HOME DEPOT 2.0

Korina 7:04:58 PM P:\9904.12 I-25 Santa Fe Alameda Interchange - FHU\16311\Hydraulics\Drawings\Phase 2\16311HYDR_PH2_PR008.dgn
9/27/2010 CDOT-PDFHighQuality_XM.pltcfg 9904-CDOT-PenTable-4.00.tbl

Print Date: 9/27/2010
File Name: 16311HYDR_PH2_PR008.dgn
Horiz. Scale: 1:100 Vert. Scale: As Noted
Unit Information Unit Leader Initials

MULLER ENGINEERING CO, INC
CONSULTING ENGINEERS
P: 9904.12 /16311/HYDRAULICS/Drawings
777 S. Wadsworth Blvd.
Suite 4-100
Lakewood, CO 80226
303-988-4939

Sheet Revisions		
Date:	Comments	Init.

Colorado Department of Transportation
DEPARTMENT OF TRANSPORTATION
2000 South Holly Street
Denver, CO 80222
Phone: 303-972-9112 FAX: 303-972-9114
Region 6 RLB

As Constructed
No Revisions:
Revised:
Void:

I-25/SANTA FE INTERCHANGE
DRAINAGE PROFILES
SHEET 8 OF 8

Designer: JAM
Detailer: KSP
Sheet Subset: DRAINAGE
Structure Numbers:
Subset Sheets: XXX of XX

Project No./Code
IM 0254-394
16311
Sheet Number 401

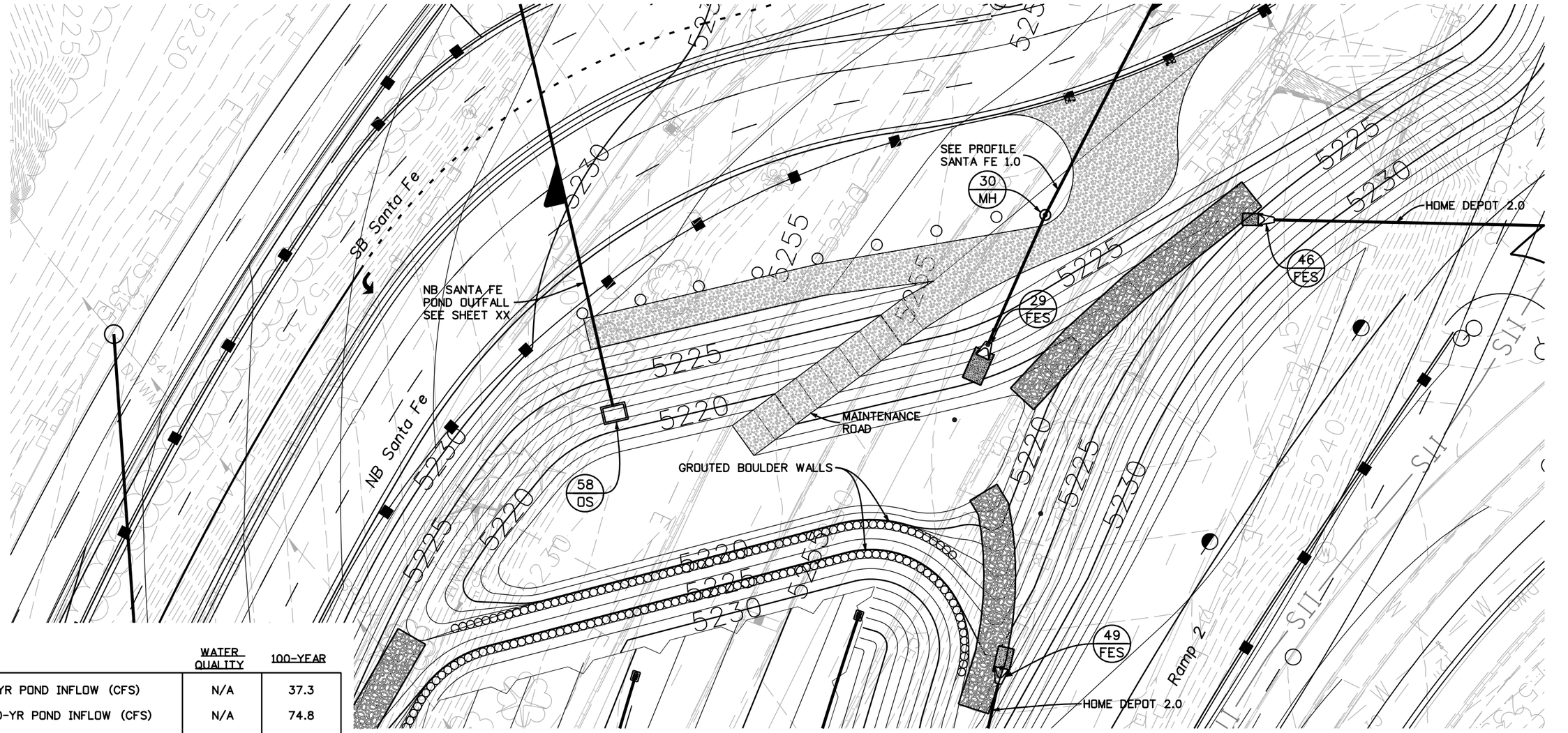

	WATER QUALITY	100-YEAR
5-YR POND INFLOW (CFS)	N/A	37.3
100-YR POND INFLOW (CFS)	N/A	74.8
PEAK STORAGE (ACRE-FT)	2.37	--
PEAK DISCHARGE (CFS)	74.8	--
PEAK STAGE (EL)	5220.59	--
DRAIN TIME (HRS)	40	--
OUTLET SIZE	--	--
DRAINAGE BASIN AREA (AC)	20.64	--

Korina 7:05:15 PM P:\9904.12 I-25 Santa Fe Alameda Interchange - FHU\16311\Hydraulics\Drawings\Phase 2\16311_ME_HYDR_PH2_NB SantaFe Pond.dgn
9/27/2010 CDOT-PDFHighQuality_XM.pltcfg 9904-CDOT-PenTable-4.00.tbl

Print Date: 9/27/2010
File Name: 16311_ME_HYDR_PH2_NB SantaFe Pond.dgn
Horiz. Scale: 1:40 Vert. Scale: As Noted
Unit Information Unit Leader Initials

MULLER ENGINEERING CO, INC
CONSULTING ENGINEERS
P: 9904.12 /16311/HYDRAULICS/Drawings
777 S. Wadsworth Blvd.
Suite 4-100
Lakewood, CO 80226
303-988-4939

Sheet Revisions		
Date:	Comments	Init.

Colorado Department of Transportation
DEPARTMENT OF TRANSPORTATION
2000 South Holly Street
Denver, CO 80222
Phone: 303-972-9112 FAX: 303-972-9114
Region 6 RLB

As Constructed
No Revisions:
Revised:
Void:

I-25/SANTA FE INTERCHANGE
NB SANTA FE POND PLAN

Designer: JAY
Detailer: KSP
Sheet Subset: DRAINAGE
Structure Numbers:
Subset Sheets: of

Project No./Code
IM 0254-394
16311
Sheet Number 402

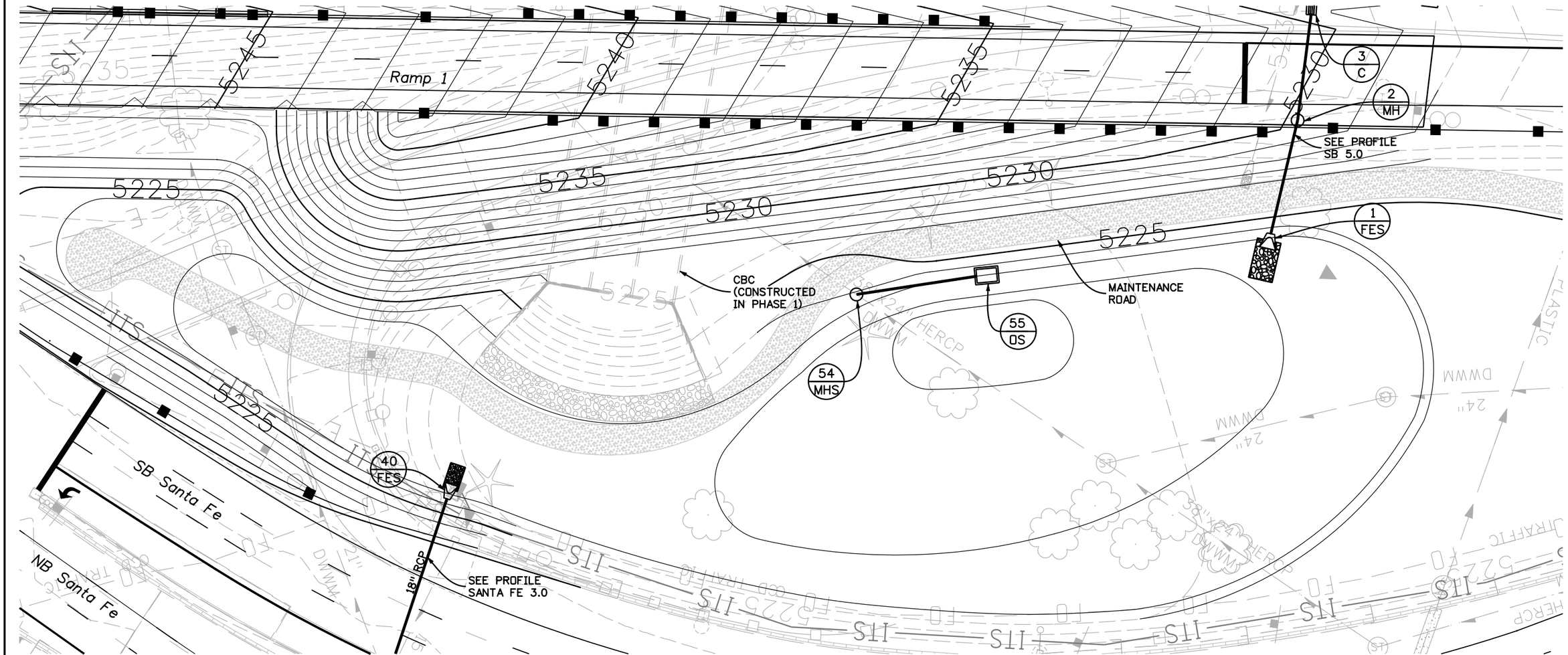

	WATER QUALITY	100-YEAR
5-YR POND INFLOW (CFS)	N/A	40.5
100-YR POND INFLOW (CFS)	N/A	54.3
PEAK STORAGE (ACRE-FT)	0.65	--
PEAK DISCHARGE (CFS)	54.3	--
PEAK STAGE (EL)	5222.06	--
DRAIN TIME (HRS)	40	--
OUTLET SIZE	--	--
DRAINAGE BASIN AREA (AC)	7.86	--

Karina 7:05:41 PM P:\9904.12 I-25 Santa Fe Alameda Interchange - FHU\16311\Hydraulics\Drawings\Phase 2\16311_ME_HYDR_PH2_Alameda East Pond.dgn
9/27/2010 CDOT-PDHighQuality_XM.pltcfg 9904-CDOT-PenTable-4.00.tbl

Print Date: 9/27/2010
File Name: 16311_ME_HYDR_PH2_Alameda East Pond.dgn
Horiz. Scale: 1:40 Vert. Scale: As Noted
Unit Information Unit Leader Initials

MULLER ENGINEERING CO, INC
CONSULTING ENGINEERS
777 S. Wadsworth Blvd.
Suite 4-100
Lakewood, CO 80226
303-988-4939
P: 9904.12 /16311/HYDRAULICS/Drawings

Sheet Revisions		
Date:	Comments	Init.

Colorado Department of Transportation
DEPARTMENT OF TRANSPORTATION
2000 South Holly Street
Denver, CO 80222
Phone: 303-972-9112 FAX: 303-972-9114
Region 6 RLB

As Constructed
No Revisions:
Revised:
Void:

I-25/SANTA FE INTERCHANGE
ALAMEDA EAST POND PLAN

Designer: JAY
Detailer:
Sheet Subset: DRAINAGE
Structure Numbers:
Subset Sheets: of

Project No./Code
IM 0254-394
16311
Sheet Number 403

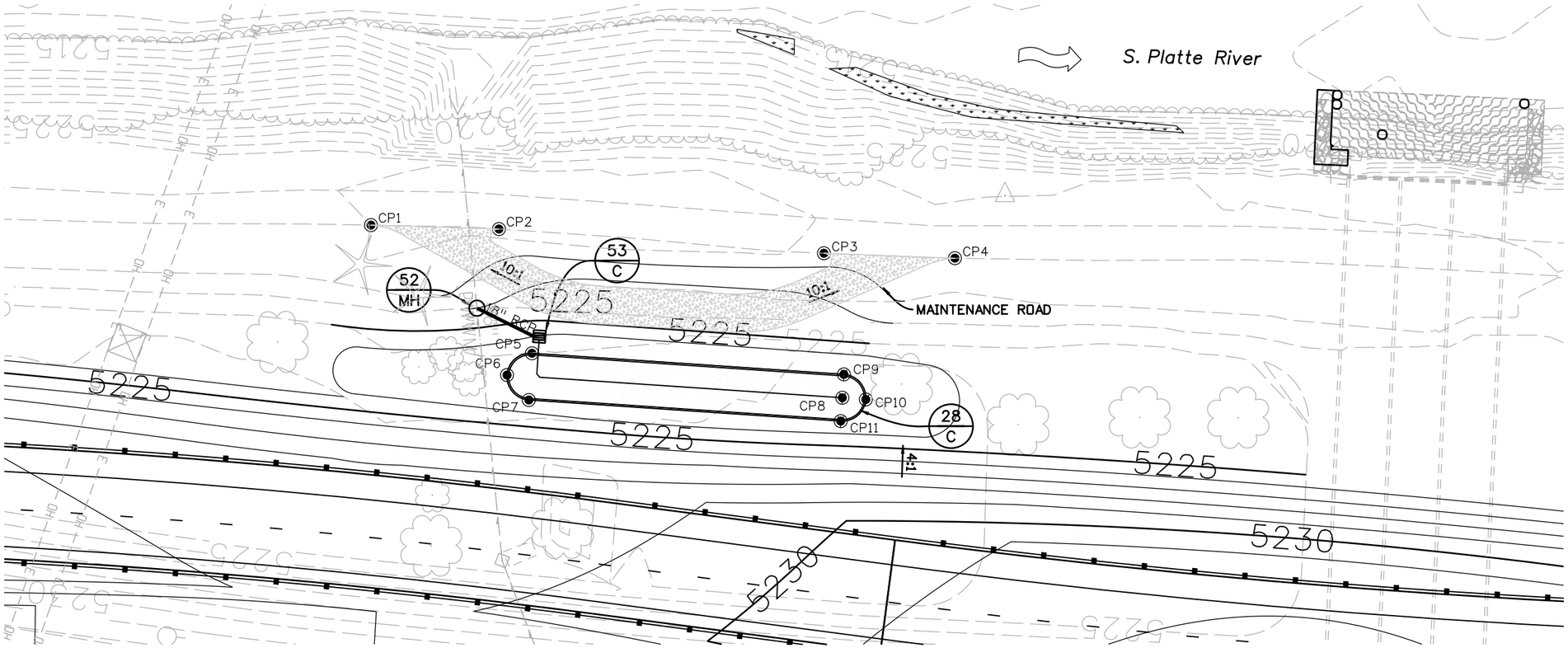

NOTES:

1. UNDERDRAINS SHALL BE ALIGNED USING 45° BENDS. NO 90° BENDS SHALL BE INSTALLED.
2. CLEANOUTS SHALL BE INSTALLED AT END OF UNDERDRAIN LINE FOR EACH UNDERDRAIN CONFIGURATION.

RAMP 4 WATER QUALITY POND CONTROL POINT TABLE				
CONTROL	NORTHING	EASTING	ELEVATION	DESCRIPTION
CP1				
CP2				
CP3				
CP4				
CP5				
CP6				
CP7				
CP8				
CP9				
CP10				
CP11				

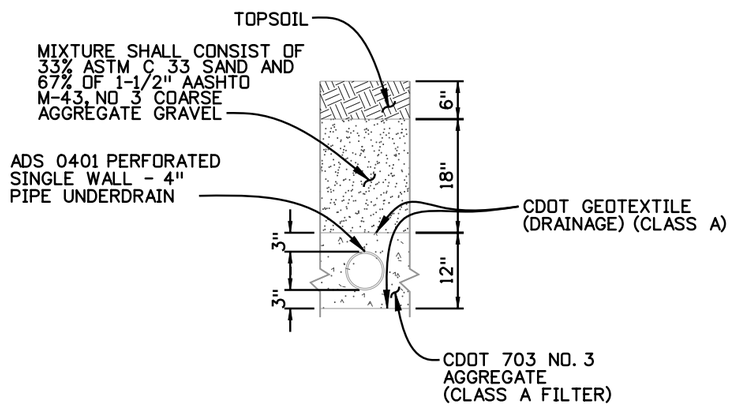

SAND FILTER UNDERDRAIN DETAIL

SCALE: 1" = 40'-0"

	WATER QUALITY	100-YEAR
5-YR POND INFLOW (CFS)	N/A	3.6
100-YR POND INFLOW (CFS)	N/A	11.4
PEAK STORAGE (ACRE-FT)	0.27	--
PEAK DISCHARGE (CFS)	11.4	--
PEAK STAGE (EL)	5223.62	--
DRAIN TIME (HRS)	40	--
OUTLET SIZE	--	--
DRAINAGE BASIN AREA (AC)	3.21	--

Karina 7:06:06 PM P:\9904.12 I-25 Santa Fe Alameda Interchange - FHU\16311\Hydraulics\Drawings\Phase 2\16311ME_HYDR_PH2_Ramp 4 Pond1.dgn
9/27/2010 CDOT-PDFHighQuality_XM.pltcfg 9904-CDOT-Fenlable-4.00.tbl

Print Date: 9/27/2010
File Name: 16311ME_HYDR_PH2_Ramp 4 Pond1.dgn
Horiz. Scale: 1:40 Vert. Scale: As Noted
Unit Information Unit Leader Initials

MULLER ENGINEERING CO, INC
CONSULTING ENGINEERS
P: 9904.12 /16311/HYDRAULICS/Drawings
777 S. Wadsworth Blvd.
Suite 4-100
Lakewood, CO 80226
303-988-4939

Sheet Revisions		
Date:	Comments	Init.

Colorado Department of Transportation
DEPARTMENT OF TRANSPORTATION
2000 South Holly Street
Denver, CO 80222
Phone: 303-972-9112 FAX: 303-972-9114
Region 6 RLB

As Constructed
No Revisions:
Revised:
Void:

I-25/SANTA FE INTERCHANGE
RAMP 4
WATER QUALITY POND

Designer: JAM
Detailer:
Sheet Subset: DRAINAGE
Structure Numbers:
Subset Sheets: of

Project No./Code
IM 0254-394
16311
Sheet Number 404

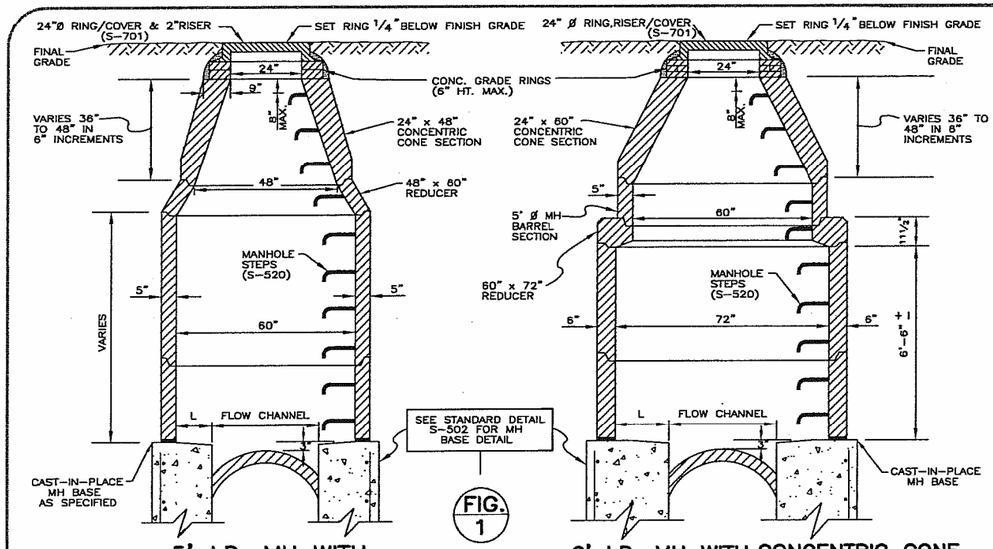

5' I.D. MH WITH CONCENTRIC CONE

▷ (30", 33" & 36" DIA. PIPE)

FIG. 1

6' I.D. MH WITH CONCENTRIC CONE

(42" ø PIPE)

▷ TO BE USED ONLY AT SPECIFIC DIRECTION OF THE ENGINEER

48" DIA. & LARGER MH'S SHALL BE TYPE B(S-503) OR TYPE P(S-504).

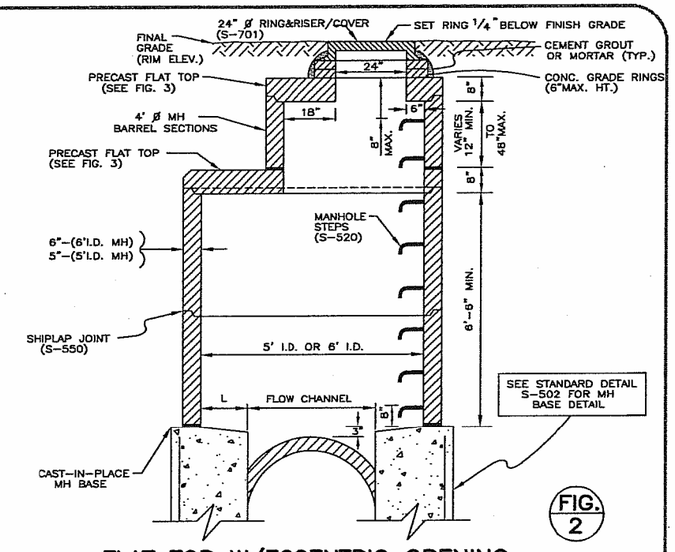

FLAT TOP W/ECCENTRIC OPENING

▷ 5' I.D. MANHOLE (33" ø & 36" ø PIPE) OR 6' I.D. MANHOLE (42"ø PIPE)

FIG. 2

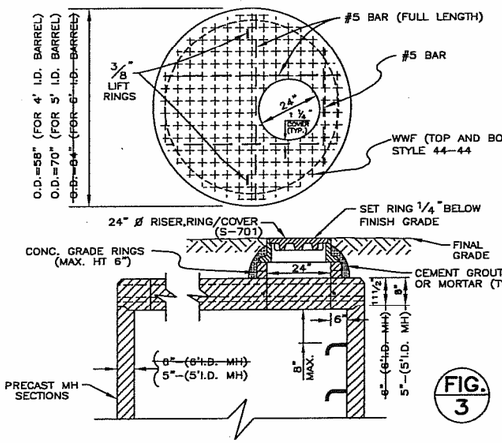

FLAT TOP W/ECCENTRIC OPENING

▷ 5' I.D. MANHOLES

FIG. 3

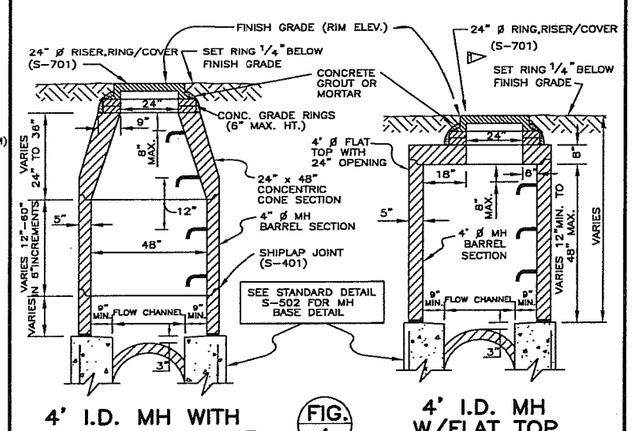

4' I.D. MH WITH CONCENTRIC CONE

(30" ø PIPE OR LESS)

FIG. 4

4' I.D. MH W/FLAT TOP

(FOR SHALLOW COVER LESS THAN 4' TO BENCH)

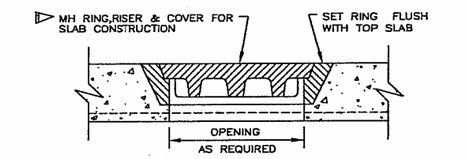

ALTERNATE RING & COVER

(TO BE USED ONLY WHEN SPECIFICALLY AUTHORIZED.)

(NON-ADJUSTABLE RING & COVER TO BE CAST IN FLAT TOP)

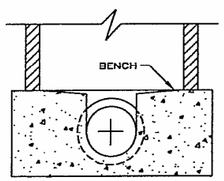

FIG. 5

IDEAL MH CHANNEL SECTION

(SEE STD. DETAIL S-502)

1. RING/COVER & 2" RISER SHALL BE SET ON A FULL BED OF MORTAR. (TYPE II CEMENT TYPICAL).
2. FLAT TOP SECTIONS (FIG. 2, 3, & 4), MAY BE USED IN LIEU OF CONCENTRIC MANHOLES WHEN SPECIFICALLY APPROVED BY THE PROJECT ENGINEER.
3. FOR MANHOLE DEPTHS LESS THAN 4' FROM RIM TO TOP OF BENCH, VERTICAL MANHOLE BARRELS WITH PRECAST FLAT TOP SECTIONS ARE REQUIRED.
4. ALL PRECAST MANHOLE SECTIONS, FLAT TOPS, BARRELS, REDUCERS ETC. SHALL CONFORM TO ASTM C-478, STANDARD SPECIFICATIONS FOR PRECAST REINFORCED MANHOLE SECTIONS.
5. FLAT TOPS (FIG. 2, 3, & 4) SHALL BE CAPABLE OF WITHSTANDING H-20 LIVE LOADS.
6. FLAT TOP SECTION WITH CONCENTRIC OPENING IS NOT ALLOWED. (SEE FIG. 3.)
7. ALL MANHOLE BARRELS, CONES, FLAT TOP SECTIONS AND RINGS SHALL INDICATED DATE, MANUFACTURER, SIZE AND ASTM C-478.
8. FOR DEPTHS GREATER THAN 20' (RIM TO INVERT) SHOP DRAWINGS, CALCULATIONS OF WALLS, TOP AND BOTTOM SLABS SHAL BE SUBMITTED.
9. AN APPROVED FLEXIBLE PLASTIC SEALANT IS REQUIRED IN SHIPLAP JOINTS AND IN JOINTS BETWEEN FLAT TOP BARREL SECTIONS, CONE SECTIONS, ETC.
10. DIMENSION L ="S" MINIMUM FOR ALL SANITARY SEWER MANHOLES (FIG. 1 & 2).
11. DESIGN ENGINEER OR PROJECT ENGINEER MAY INCREASE MH SIZE FOR SPECIAL DESIGN CONSIDERATIONS.
12. SET 24" MANHOLE RING 1/4 "BELOW FINISH GRADE ALL MANHOLES. (TYPICAL FOR ALL APPLICATIONS UNLESS DETAILED OTHERWISE.)
13. ALL MORTAR AND GROUT SHALL USE TYPE II CEMENT.
14. FACE OF GRADE RINGS & SHIPLAP JOINTS SHALL BE GROUTED WITH AN APPROVED NON-SHRINK GROUT.
15. MANHOLE STEPS SHALL NOT BE INSTALLED OVER THE FLOW CHANNEL. THEY SHALL BE PLACED 12" MINIMUM OR 18" MAXIMUM IN STRAIGHT VERTICAL ALIGNMENT WITH THE BOTTOM STEP 8" ABOVE THE BENCH MINIMUM. SEE STANDARD DETAIL S-750 AND S-502.
16. ▷ THE NUMBER OF CONNECTORS INTO A MANHOLE SHALL BE LIMITED TO TWO.
17. ▷ 8"DIA MH'S ALLOWED ONLY WITH 42" PIPE AND SPECIFIC APPROVAL OF THE ENGINEER.

REVISED	BY	DATE
▷	I.J.	1/02

CITY AND COUNTY OF DENVER
DEPARTMENT OF PUBLIC WORKS
WASTEWATER MANAGEMENT DIVISION

STANDARD DETAILS
STANDARD PRECAST MANHOLE BARREL AND TOP SECTIONS (24" Ø RING AND COVER)

ISSUE DATE	DRAWN BY	CHECKED BY	SHEET NO.	OF	DRAWING NO.
8/94	D.J.K.	I.J.	1	1 SHEETS	S-501.1

D:\DRAWINGS\MSDETAILS\S501-1.DWG, 2/1/96

Korina 7:06:21 PM P:\9904.12 I-25 Santa Fe Alameda Interchange - FHUV16311\Hydraulics\Drawings\Phase 2\16311HYDR_PH2_DETAIL01.dgn
9/27/2010 CDOT-PDFHighQuality_XM.pltcfg

Print Date: 9/27/2010	
File Name: 16311HYDR_PH2_DETAIL01.dgn	
Horiz. Scale: 1:1	Vert. Scale: As Noted
Unit Information	Unit Leader Initials

MULLER ENGINEERING CO, INC
CONSULTING ENGINEERS
P: 9904.12 /16311/HYDRAULICS/Drawings
777 S. Wadsworth Blvd.
Suite 4-100
Lakewood, CO 80226
303-988-4939

Sheet Revisions		
Date:	Comments	Init.

Colorado Department of Transportation
DEPARTMENT OF TRANSPORTATION
2000 South Holly Street
Denver, CO 80222
Phone: 303-972-9112 FAX: 303-972-9114
Region 6 RLB

As Constructed	
No Revisions:	
Revised:	
Void:	

I-25/SANTA FE INTERCHANGE
CITY AND COUNTY OF DENVER
DETAILS SHEET 1 OF 6

Designer:	JAY	Structure Numbers	
Detailer:	KSP		
Sheet Subset:	DRAINAGE	Subset Sheets:	XX of XX

Project No./Code	
IM 0254-394	
16311	
Sheet Number	405

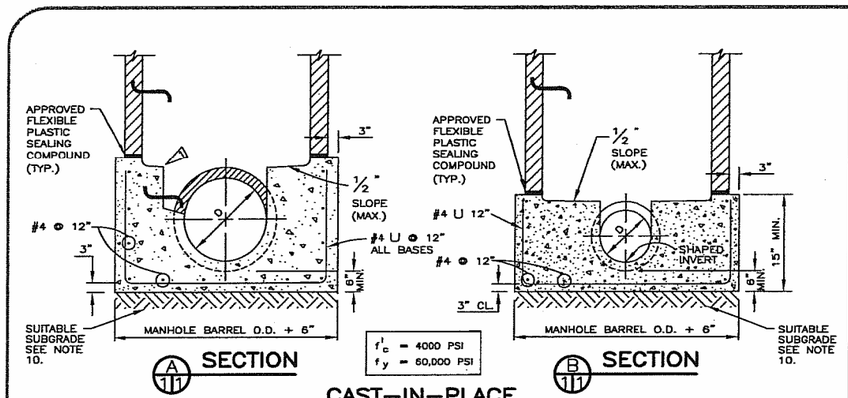

TABLE I

PIPE DIAMETER	MH-BARREL DIAMETER
30" OR LESS	4'
33" – 36"	5'

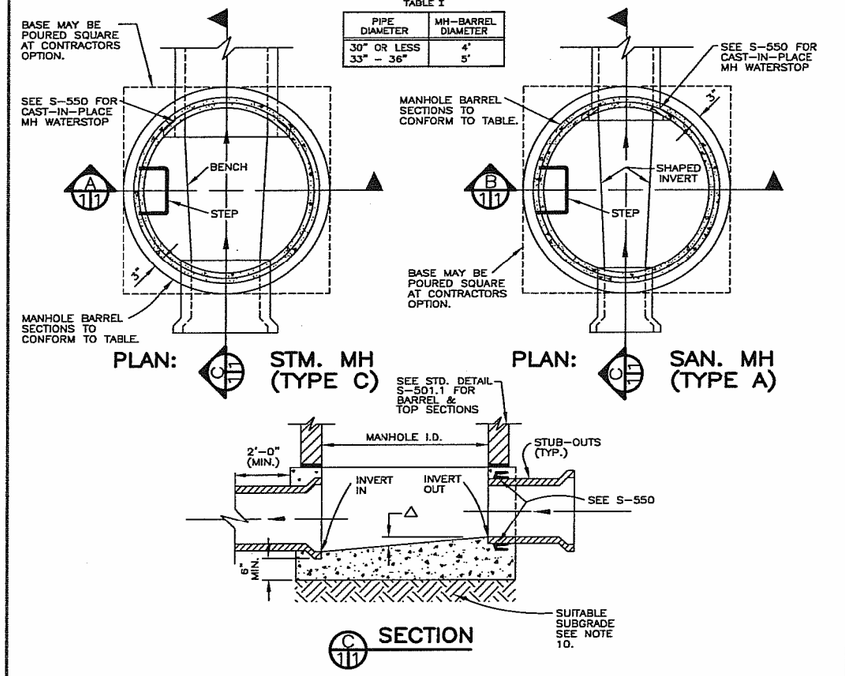

NOTES:
1. MANHOLE BARREL MINIMUM DIAMETER SHALL CONFORM TO TABLE I.
2. GROUTED FLOW CHANNELS AND INVERTS MAY BE FORMED BY SHAPING WITH LEAN CONCRETE (f'_c =2000 PSI MIN.).
3. MANHOLE STEPS SHALL CONFORM TO DIVISION SPECIFICATIONS AND WMD STANDARD DETAILS S-750.
4. ALL DEAD END MANHOLES SHALL BE STUBBED THRU AT 0.40% MINIMUM SLOPE.
5. STUB-OUTS SHALL EXTEND 2'-0" MIN. PAST MANHOLE O.D. AND BE SATISFACTORILY PLUGGED.
6. REINFORCING IS REQUIRED FOR ALL MANHOLE BASES.
7. SLOPE MANHOLE BENCH ½" MAXIMUM TOWARD FLOW CHANNEL.
8. Δ =INVERT DROP THRU MANHOLE. FOR SANITARY SEWERS, IF Δ ≥ 18", AN OUTSIDE DROP MANHOLE IS REQUIRED (S-530).
9. SHIPLAP JOINTS ON MANHOLE BARREL RISER SHALL CONFORM TO DIVISION STANDARDS AND SPECIFICATIONS (S-401).
10. ALL MANHOLE BASES SHALL BE PLACED ON SUITABLE SUBGRADE MATERIAL. AT THE DIRECTION OF THE ENGINEER THE SUBGRADE SHALL BE OVEREXCAVATED AND STABILIZED WITH AN ACCEPTABLE GRANULAR MATERIAL, COMPACTED TO 95% OF MAXIMUM DRY DENSITY IN ACCORDANCE WITH AASHTO T-180.
11. ALL PIPE OPENINGS SHALL BE CONSTRUCTED WITH AN APPROVED FEXIBLE WEDGE-TYPE GASKET CONFORMING TO ASTM C-443 WHICH SHALL BE CAPABLE OF PROVIDING A WATER TIGHT JOINT WITH ZERO LEAKAGE AROUND THE INSTALLED PIPE (SEE S-550). AN APPROVED FLEXIBLE BOOT TYPE SLEEVE MAY ALSO BE USED FOR PRECAST INSTALLATIONS.
12. PRECAST BARREL SECTIONS, CONES, RISERS, ETC. SHALL CONFORM TO ASTM C-478, LATEST REVISION.

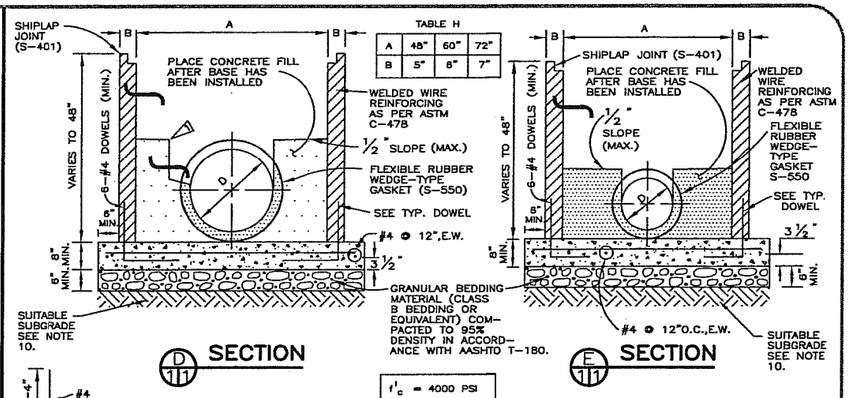

TABLE H

A	48"	60"	72"
B	5"	6"	7"

f'_c = 4000 PSI
f_y = 60,000 PSI

PRECAST

TABLE I

PIPE DIAMETER	MH-BARREL DIAMETER
30" OR LESS	4'
33" – 36"	5'

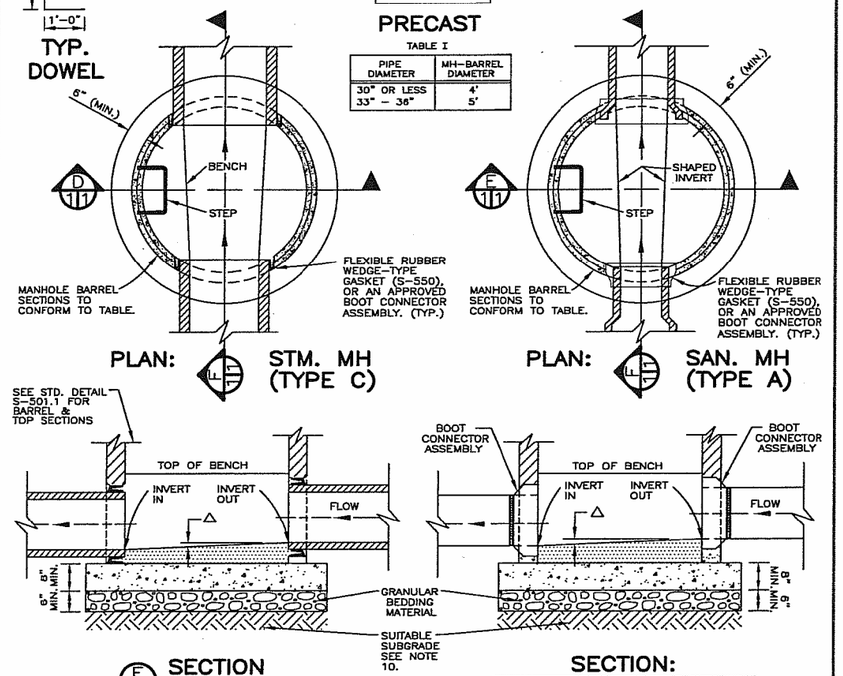

PRECAST MANHOLE BASES:
1. THE BASE SLAB SHALL BE POURED MONOLITHIC WITH BOTTOM RISER SECTION.
2. PRECAST MANHOLE BASES SHALL FIT THE CONDITIONS AND LOCATIONS FOR WHICH THEY ARE INTENDED WITHOUT ANY FIELD MODIFICATIONS. ANY MANHOLE BASE WHICH REQUIRES FIELD CUTTING OR MODIFICATION IN ORDER TO FIT THE LOCATIONS INTENDED SHALL BE REJECTED BY THE CITY AND REMOVED AND REPLACED BY THE CONTRACTOR AT NO COST TO THE CITY.
3. PRECAST MANHOLE BASES ARE TO BE BEDDED ON AN APPROVED GRANULAR BEDDING MATERIAL AS DETAILED ABOVE.

REVISED	BY	DATE
1	IJ	1/02

CITY AND COUNTY OF DENVER
DEPARTMENT OF PUBLIC WORKS
WASTEWATER MANAGEMENT DIVISION

STANDARD DETAILS
STANDARD MANHOLE BASE CONSTRUCTION TYPE A AND TYPE C (PRECAST SECTIONS & CAST-IN-PLACE)

ISSUE DATE	DRAWN BY	SHEET NO.	DRAWING NO.
5/94	DJK	1	S-502
	CHECKED BY IJ	OF 1 SHEETS	

Print Date: 9/27/2010
File Name: 16311HYDR_PH2_DETAIL02.dgn
Horiz. Scale: 1:1 Vert. Scale: As Noted
Unit Information Unit Leader Initials

MULLER ENGINEERING CO, INC
CONSULTING ENGINEERS
P: 9904.12 /16311/HYDRAULICS/Drawings
777 S. Wadsworth Blvd.
Suite 4-100
Lakewood, CO 80226
303-988-4939

Sheet Revisions		
Date:	Comments	Init.

Colorado Department of Transportation
DEPARTMENT OF TRANSPORTATION
2000 South Holly Street
Denver, CO 80222
Phone: 303-972-9112 FAX: 303-972-9114
Region 6 RLB

As Constructed
No Revisions:
Revised:
Void:

I-25/SANTA FE INTERCHANGE
CITY AND COUNTY OF DENVER
DETAILS SHEET 2 OF 6

Designer: JAY
Detailer: KSP
Sheet Subset: DRAINAGE
Structure Numbers:
Subset Sheets: XX of XX

Project No./Code
IM 0254-394
16311
Sheet Number 406

Korina 7:06:41 PM P:\9904.12 I-25 Santa Fe Alameda Interchange - FHU\16311\Hydraulics\Drawings\Phase 2\16311HYDR_PH2_DETAIL02.dgn
9/27/2010 CDOT-PDFHighQuality_XM.pltcfg

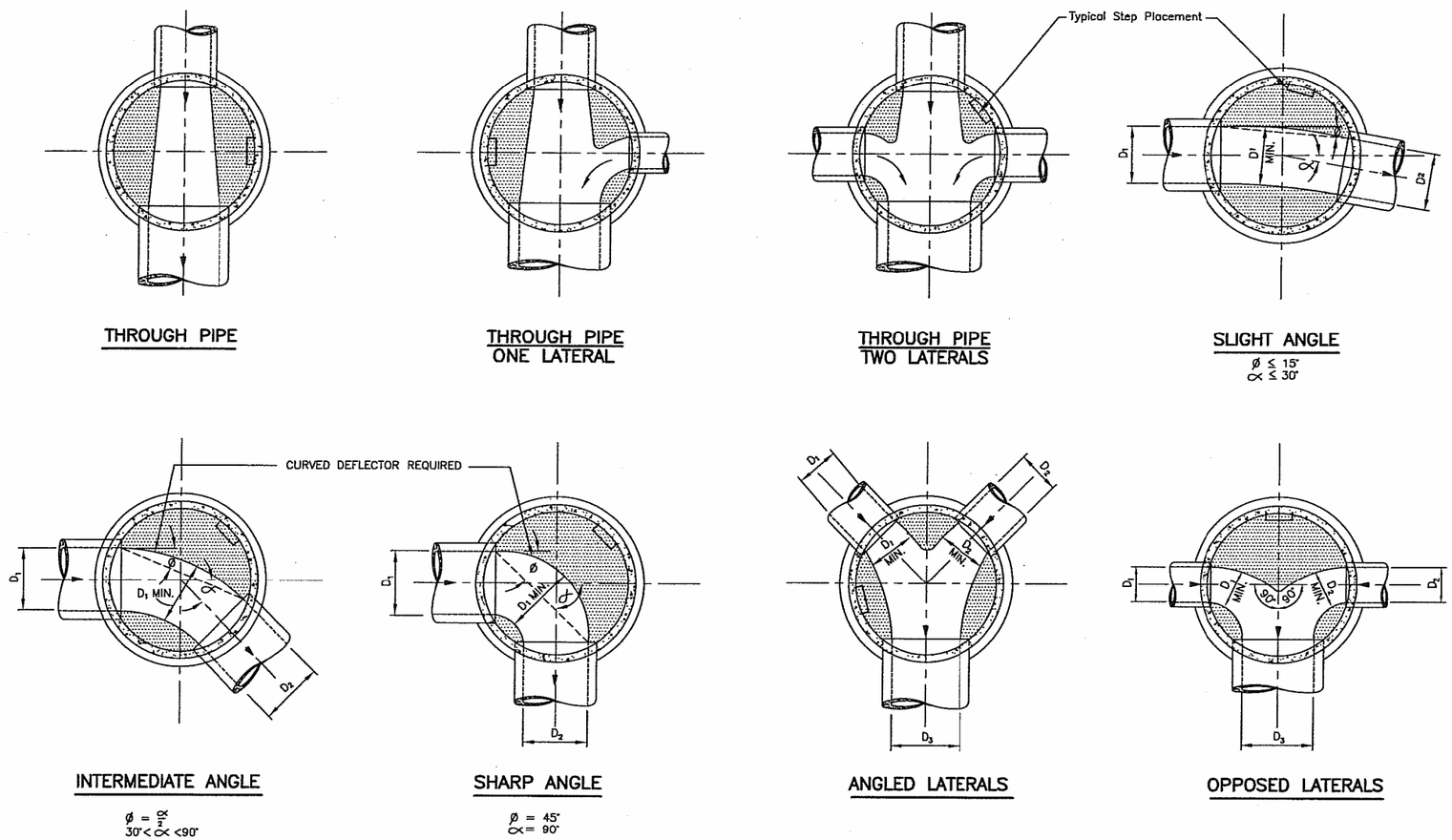

THROUGH PIPE

THROUGH PIPE
ONE LATERAL

THROUGH PIPE
TWO LATERALS

SLIGHT ANGLE
$\phi \leq 15°$
$\alpha \leq 30°$

INTERMEDIATE ANGLE
$\phi = \frac{\alpha}{2}$
$30° < \alpha < 90°$

SHARP ANGLE
$\phi = 45°$
$\alpha = 90°$

ANGLED LATERALS

OPPOSED LATERALS

NOTES:
1. DETAILS SHOWN ARE TYPICAL ONLY FOR INSTALLATIONS WITH ALL INVERTS AT SAME RELATIVE ELEVATION.
2. FOR EXCESSIVE ELEVATION DIFFERENCE BETWEEN INVERTS, ETC. SPECIAL BASE/CHANNEL DETAILS SHALL BE SHOWN ON PLANS.
3. CHANNELIZATION DETAILS & STEP PLACEMENT TYPICAL FOR BOTH STORM AND SANITARY SEWER MH'S.
4. THE MINUMUM VERTICAL DROP THRU MANHOLE BASE SHALL BE 0.10 FOOT.
5. FOR VERTICAL DROPS IN EXCESS OF 1.5 FEET AN OUTSIDE DROP MANHOLE IS REQUIRED.

REVISED	
BY	DATE

CITY AND COUNTY OF DENVER
DEPARTMENT OF PUBLIC WORKS
WASTEWATER MANAGEMENT DIVISION

STANDARD DETAILS
TYPICAL MH BASE CHANNELIZATION

ISSUE DATE	DRAWN BY	SHEET NO.	DRAWING NO.
6/94	D.V. / CHECKED BY L.J.	1 OF 1 SHEETS	S-520

C:\DRAWINGS\WMDSTAND\S520.DWG 3/1/95

Print Date: 9/27/2010
File Name: 16311HYDR_PH2_DETAIL03.dgn
Horiz. Scale: 1:1 Vert. Scale: As Noted
Unit Information Unit Leader Initials

MULLER ENGINEERING CO., INC
CONSULTING ENGINEERS
P: 9904.12 /16311/HYDRAULICS/Drawings
777 S. Wadsworth Blvd.
Suite 4-100
Lakewood, CO 80226
303-988-4939

Sheet Revisions		
Date:	Comments	Init.

Colorado Department of Transportation
DOT DEPARTMENT OF TRANSPORTATION
2000 South Holly Street
Denver, CO 80222
Phone: 303-972-9112 FAX: 303-972-9114
Region 6 RLB

As Constructed
No Revisions:
Revised:
Void:

I-25/SANTA FE INTERCHANGE
CITY AND COUNTY OF DENVER
DETAILS SHEET 3 OF 6

Designer: JAY
Detailer: KSP
Structure Numbers
Sheet Subset: DRAINAGE
Subset Sheets: XX of XX

Project No./Code
IM 0254-394
16311
Sheet Number 407

Korina 7:07:02 PM P:\9904.12 I-25 Santa Fe Alameda Interchange - FHU\16311\Hydraulics\Drawings\Phase 2\16311HYDR_PH2_DETAIL03.dgn
9/27/2010 CDOT-PDFHighQuality_XM.pltcfg

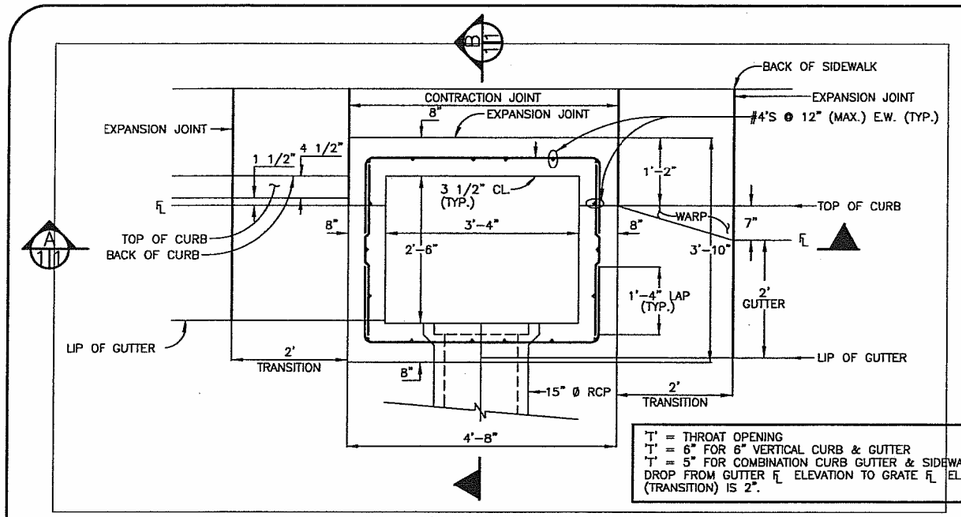

'T' = THROAT OPENING
'T' = 6" FOR 6" VERTICAL CURB & GUTTER
'T' = 5" FOR COMBINATION CURB GUTTER & SIDEWALK
DROP FROM GUTTER FL ELEVATION TO GRATE FL ELEVATION (TRANSITION) IS 2".

VERTICAL CURB & GUTTER

PLAN VIEW
SCALE: 3/4"=1'

COMB. CURB, GUTTER & SIDEWALK

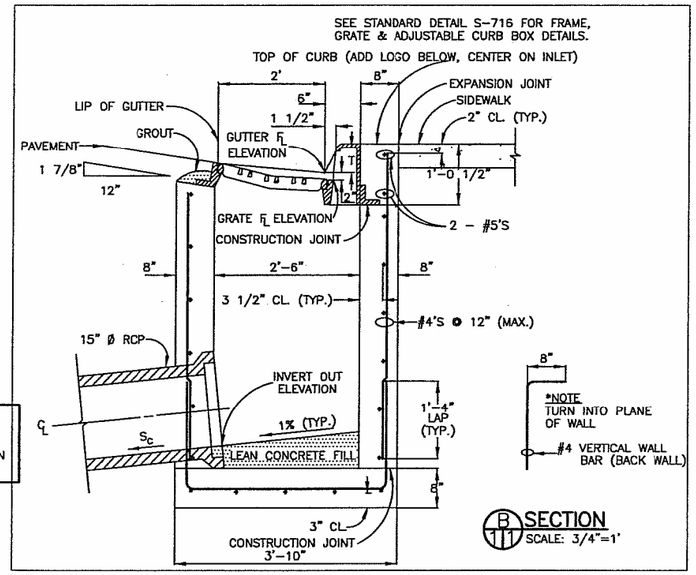

SECTION
SCALE: 3/4"=1'

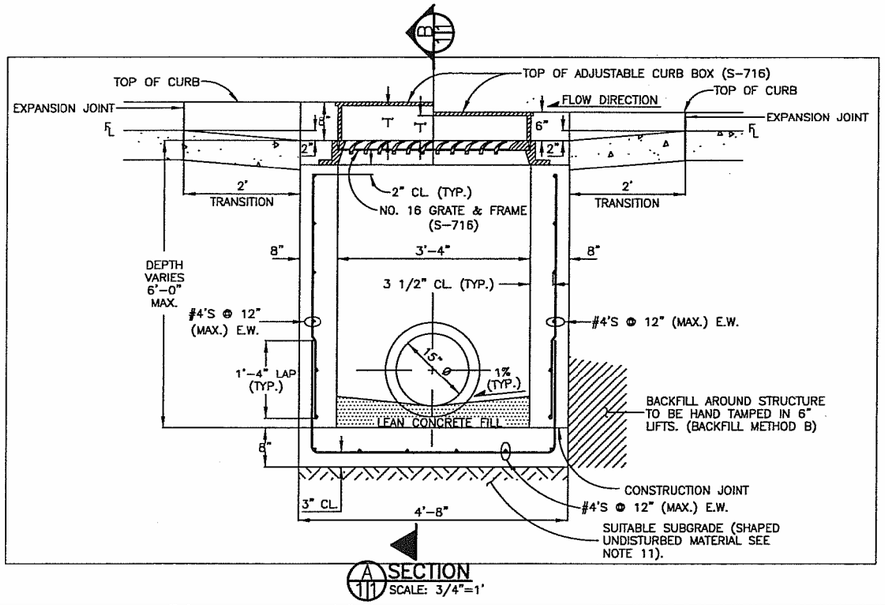

SECTION
SCALE: 3/4"=1'

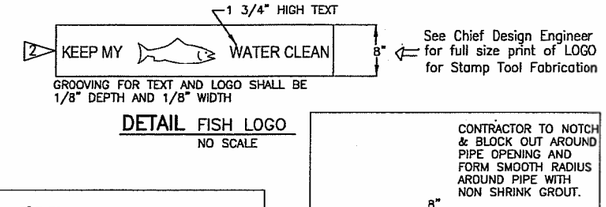

See Chief Design Engineer for full size print of LOGO for Stamp Tool Fabrication

GROOVING FOR TEXT AND LOGO SHALL BE 1/8" DEPTH AND 1/8" WIDTH

DETAIL FISH LOGO
NO SCALE

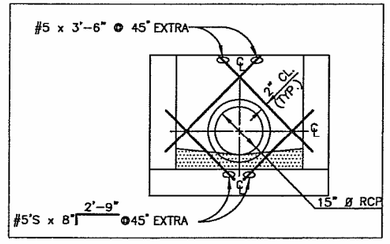

REBAR PLACEMENT
DETAIL AROUND CONNECTOR
SCALE: 1/2"=1'

CONTRACTOR TO NOTCH & BLOCK OUT AROUND PIPE OPENING AND FORM SMOOTH RADIUS AROUND PIPE WITH NON SHRINK GROUT.

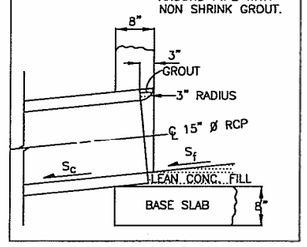

DETAIL CONNECTOR OUTLET
SCALE: 3/4"=1' (OPTIONAL)

NOTE:
SEE DETAIL SPECIFICATIONS SECTION 11.04 STORM INLETS FOR MORE INFORMATION. USE OF THIS DETAIL WITHOUT SPECIFICATIONS SHALL BE CONSIDERED NON-COMPLIANT.

NOTES:
1. FOR PAYMENT PURPOSES, INLET STRUCTURES SHALL ALSO INCLUDE 2'-0" CURB & GUTTER TRANSITION SECTION AT EACH END OF INLET PLUS SIDEWALK SECTIONS WHERE REQUIRED BEHIND INLET STRUCTURE AND TRANSITION SECTIONS.
2. FLOOR SLOPE MAY BE POURED MONOLITHIC WITH BASE.
3. S_C = SLOPE OF CONNECTOR = 1% MIN.
4. UNLESS OTHERWISE SPECIFIED ON THE DRAWINGS OR OTHERWISE APPROVED, ALL #16 INLETS SHALL BE CONSTRUCTED WITH AN ADJUSTABLE C.I. CURB BOX (S-716).
5. DESIGN CONDITIONS FOR INLET ALLOWS DEPTHS OF 6' (MAX.). FOR INLETS MORE THAN 6 FEET IN DEPTH, SHOP DRAWINGS AND DESIGN ANALYSIS SHALL BE SUBMITTED FOR APPROVAL.
6. ALL REINFORCING STEEL SHALL BE ASTM, A-615, GRADE 60 DEFORMED BARS. DIAMETER OF BEND MEASURED ON THE INSIDE OF THE BAR SHALL BE A MINIMUM OF 6 BAR DIAMETER.
7. ALL WORK SHALL CONFORM TO AASHTO "STANDARD SPECIFICATIONS FOR HIGHWAY BRIDGES", FIFTEENTH EDITION, 1992.
8. CONCRETE SHALL HAVE A 28 DAY COMPRESSIVE STRENGTH OF 4000 PSI.
9. SUB-GRADE SHALL BE A GRADATION EQUAL TO CLASS B BEDDING COMPACTED TO 95% MAXIMUM DRY DENSITY. AASHTO DESIGNATION T-180.
10. NO FORMWORK SHALL REMAIN INSIDE STRUCTURE WHEN COMPLETE.
11. SUB-GRADE SHALL BE SHAPED UNDISTURBED MATERIAL OR OVEREXCAVATED AND BACKFILLED WITH CLASS B BEDDING MATERIAL, COMPACTED PER WMD SPECIFICATIONS.
12. SPLICING OF REINFORCING STEEL SHALL BE PERMITTED ONLY WHERE DETAILED IN DRAWINGS.
13. INLET WALLS SHALL BE FORMED BOTH INSIDE AND OUTSIDE. CASTING OF SIDEWALLS AGAINST EARTH IS NOT PERMITTED.
14. LEAN CONCRETE FILL TO BE f'_c = 2000 PSI.

REVISED	BY	DATE
A	E.M.K.	4/10/96
B	I.J.	3/29/99

CITY AND COUNTY OF DENVER
DEPARTMENT OF PUBLIC WORKS
WASTEWATER MANAGEMENT DIVISION

STANDARD DETAILS
SINGLE NO. 16 OPEN THROAT INLET
ADJUSTABLE CURB BOX

ISSUE DATE	DRAWN BY E.M.K.	SHEET NO. 1	DRAWING NO.
6/94	CHECKED BY M.	OF 1 SHEETS	S-618.1

FILENAME: C:\DRAWINGS\INVESTIND\S618-1.DWG, 4/11/96

Karina 7:07:21 PM P:\9904.12 I-25 Santa Fe Alameda Interchange - FHU\16311\Hydraulics\Drawings\Phase 2\16311HYDR_PH2_DETAIL04.dgn
9/27/2010 CDOT-PDFHighQuality_XM.pltcfg

Print Date: 9/27/2010
File Name: 16311HYDR_PH2_DETAIL04.dgn
Horiz. Scale: 1:1 Vert. Scale: As Noted
Unit Information Unit Leader Initials

MULLER ENGINEERING CO, INC
CONSULTING ENGINEERS
P: 9904.12 /16311/HYDRAULICS/Drawings
777 S. Wadsworth Blvd.
Suite 4-100
Lakewood, CO 80226
303-988-4939

Sheet Revisions		
Date:	Comments	Init.

Colorado Department of Transportation
DEPARTMENT OF TRANSPORTATION
2000 South Holly Street
Denver, CO 80222
Phone: 303-972-9112 FAX: 303-972-9114
Region 6 RLB

As Constructed
No Revisions:
Revised:
Void:

I-25/SANTA FE INTERCHANGE
CITY AND COUNTY OF DENVER
DETAILS SHEET 4 OF 6

Designer: JAY
Detailer: KSP
Sheet Subset: DRAINAGE
Structure Numbers
Subset Sheets: XX of XX

Project No./Code
IM 0254-394
16311
Sheet Number 408

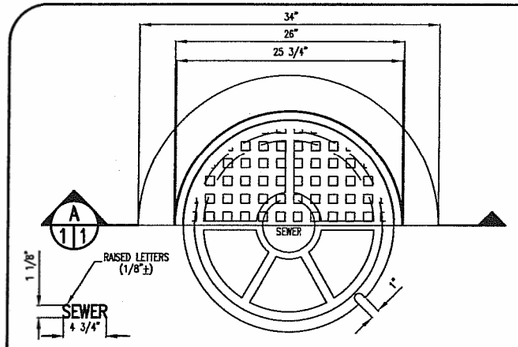

HALF PLAN

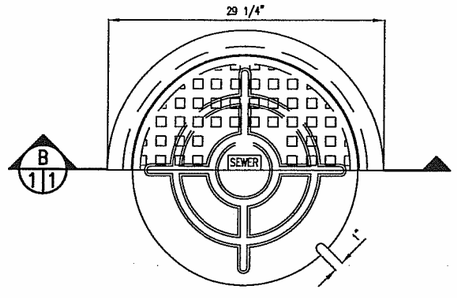

HALF PLAN

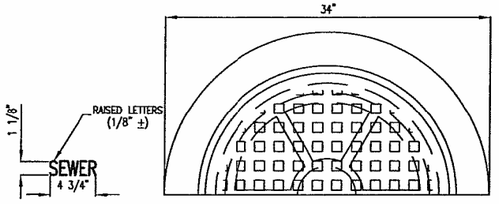

HALF PLAN

MINIMUM WEIGHT

4" RING	8" RING
RING=60#	RING=80#
COVER=60#	COVER=60#
TOTAL=120#	TOTAL=140#

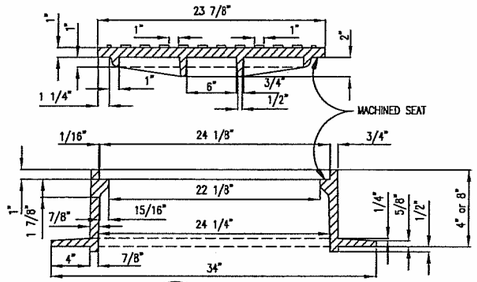

MINIMUM WEIGHT

4" RING	8" RING
RING=165	RING=235
COVER=165	COVER=165
TOTAL=330#	400#

FIG. 1 CAST IRON
24" MANHOLE
RING & COVER
DENVER STANDARD PATTERN

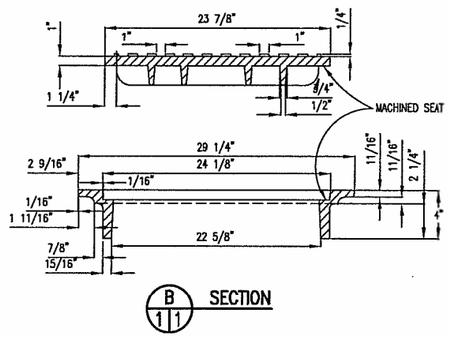

FIG. 2 CAST IRON
24" MANHOLE
RING & COVER
SLAB CONSTRUCTION

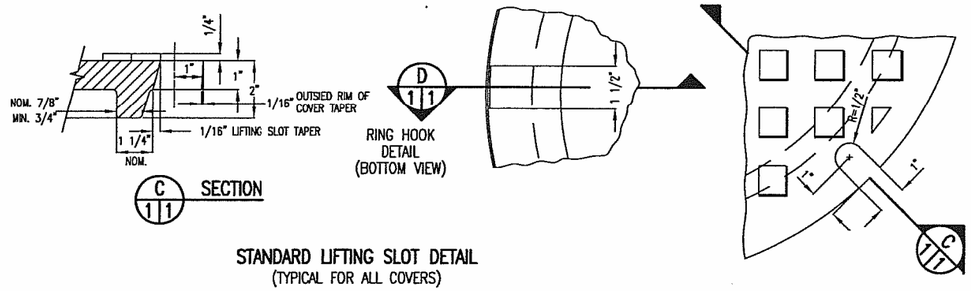

STANDARD LIFTING SLOT DETAIL
(TYPICAL FOR ALL COVERS)

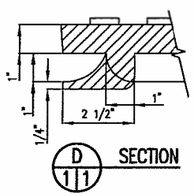

NOTES: CAST IRON
1. COVER SHALL BE THE DENVER STANDARD PATTERN OR ALTERNATE.
2. THE CASTING SHALL BE OF GRAY CAST IRON, ASTM DESIGNATION A48 CLASS 35B. THE MINIMUM TENSILE STRENGTH SHALL BE 35 KSI. THE TEST BAR DESIGNATION IS NOT DEFINED AT THIS TIME.
3. CASTINGS SHALL NOT BE DIPPED OR PAINTED.
4. CASTINGS SHALL BE CLEAN, TREE OF FUSED SAND AND REASONABLY SMOOTH. THERE SHALL BE NO PROMINENT BLOW HOLES, NO CRACKS OR FISSURES, AND NO OBSERVED INCOMPLETE FILLING OF THE MOLD.
5. THE MUD RING IS OPTIONAL.
6. THE 4 OR 5 INCH DEEP RING IS TO BE CONSIDERED AS STANDARD. THE 7 OR 8 INCH DEEP RING IS FOR USE IN DIRT OR LIGHT ASPHALT AND SHALL BE AT THE ENGINEER'S OPTION.
7. COVERS TO DISPLAY ON VISIBLE SURFACE, A48-35 (FOR 35KSI CI), MFG'S LOGO OR NAME, YEAR (2 DIGITS), AND COUNTRY OF ORIGIN IF IMPORTED.

1 REMOVE ALUMINUM COVER DETAILS

REVISED		
	BY	DATE
1	L.J.	1/02

CITY AND COUNTY OF DENVER
DEPARTMENT OF PUBLIC WORKS
WASTEWATER MANAGEMENT DIVSION

STANDARD DETAILS
FOR
24" DIA. RING AND COVER
DENVER STANDARD PATTERN

ISSUE DATE | DRAWN BY K.M.K. | CHECKED BY | SHEET NO. 1 OF 1 SHEETS | DRAWING NO. S-701

Karina 7:07:41 PM P:\9904.12 I-25 Santa Fe Alameda Interchange - FHU\16311\Hydraulics\Drawings\Phase 2\16311HYDR_PH2_DETAIL05.dgn
9/27/2010 CDOT-PDFHighQuality_XM.pltcfg

Print Date: 9/27/2010
File Name: 16311HYDR_PH2_DETAIL05.dgn
Horiz. Scale: 1:1 Vert. Scale: As Noted
Unit Information Unit Leader Initials

MULLER ENGINEERING CO, INC
CONSULTING ENGINEERS
P: 9904.12 /16311/HYDRAULICS/Drawings
777 S. Wadsworth Blvd.
Suite 4-100
Lakewood, CO 80226
303-988-4939

Sheet Revisions

Date:	Comments	Init.

Colorado Department of Transportation
DOT DEPARTMENT OF TRANSPORTATION
2000 South Holly Street
Denver, CO 80222
Phone: 303-972-9112 FAX: 303-972-9114
Region 6 RLB

As Constructed
No Revisions:
Revised:
Void:

I-25/SANTA FE INTERCHANGE
CITY AND COUNTY OF DENVER
DETAILS SHEET 5 OF 6

Designer: JAY
Detailer: KSP
Sheet Subset: DRAINAGE
Structure Numbers:
Subset Sheets: XX of XX

Project No./Code
IM 0254-394
16311
Sheet Number 409

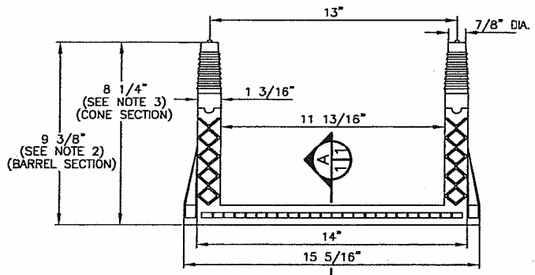

PLAN
NOT TO SCALE

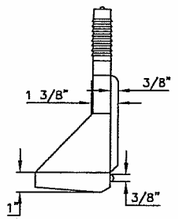

END VIEW
NOT TO SCALE

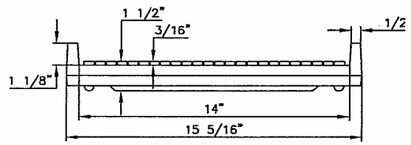

ELEVATION
NOT TO SCALE

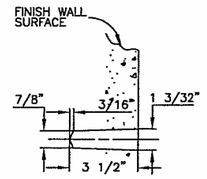

DETAIL PIN BLOCK OUT
NOT TO SCALE

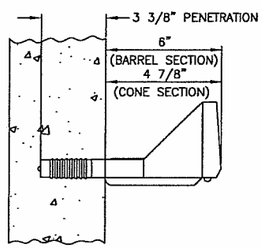

DETAIL
NOT TO SCALE

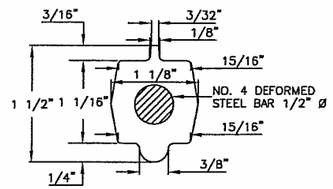

SECTION
NOT TO SCALE

POLYPROPYLENE REINFORCED PLASTIC STEP

NOTES:

1. ASTM SPECIFICATIONS:
   A. ASTM C-478
   B. ASTM A-615 GRADE 60 (STEEL REBAR).
   C. ASTM 2146-69, TYPE III, GRADE 16906 (POLYPROPYLENE).
2. STEPS INSTALLED IN MANHOLE BARREL SECTIONS OR VERTICAL WALLS OF STRUCTURES SHALL HAVE A 9 3/8 INCH LEG AND SHALL PROJECT FROM THE WALL 6 INCHES.
3. STEPS INSTALLED IN MANHOLE CONE SECTIONS SHALL HAVE AN 8 1/4 INCH LEG AND SHALL PROJECT FROM THE WALL 4 7/8 INCHES.
4. ALL STEPS SHALL HAVE A PENETRATION DEPTH INTO THE WALL OF 3 3/8 INCHES.
5. STEPS SHALL BE INSTALLED BY THE "PRESS-FIT" METHOD UTILIZING A SPECIALLY TAPERED PIN TO FORM THE INSERT HOLE AS SHOWN, FOLLOWING MANUFACTURER'S RECOMMENDED PROCEDURE AND SHALL NOT BE GROUTED IN PLACE.
6. INSTALLED STEPS SHALL BE CAPABLE OF WITHSTANDING A PULL OUT FORCE OF 2500 LB. PER LEG FOR A MINIMUM PERIOD OF TWO MINUTES.
7. PINS MUST BE SMOOTH AND CONTINUOUSLY TAPERED. DIMENSIONS OF THE PIN AND THE INSERTED PORTION OF THE MANHOLE STEP ARE TYPICAL ONLY. W.M.D. INSTALLATIONS REQUIRE A MATCHED COMBINATION OF A TAPERED INSERT PIN AMD MANHOLE STEP, AS RECOMMENDED OR REQUIRED BY SPECIFIC MANUFACTURER OF THE STEP TO BE USED.
8. THIS STEP CAN ALSO BE USED IN TOE POCKET INSTALLATIONS PROVIDED 5" TOE CLEARANCE IS ALLOWED.

REVISED		
	BY	DATE

CITY AND COUNTY OF DENVER
DEPARTMENT OF PUBLIC WORKS
WASTEWATER MANAGEMENT DIVISION

STANDARD DETAILS
MANHOLE STEPS

ISSUE DATE	DRAWN BY	SHEET NO.	DRAWING NO.
6/94	E.M.K. CHECKED BY L.J.	1 OF 1 SHEETS	S-750

Print Date: 9/27/2010
File Name: 16311HYDR_PH2_DETAIL06.dgn
Horiz. Scale: 1:1 Vert. Scale: As Noted
Unit Information Unit Leader Initials

MULLER ENGINEERING CO., INC
CONSULTING ENGINEERS
P: 9904.12 /16311/HYDRAULICS/Drawings
777 S. Wadsworth Blvd.
Suite 4-100
Lakewood, CO 80226
303-988-4939

Sheet Revisions

Date:	Comments	Init.

Colorado Department of Transportation
DOT DEPARTMENT OF TRANSPORTATION
2000 South Holly Street
Denver, CO 80222
Phone: 303-972-9112 FAX: 303-972-9114
Region 6 RLB

As Constructed
No Revisions:
Revised:
Void:

I-25/SANTA FE INTERCHANGE
CITY AND COUNTY OF DENVER
DETAILS SHEET 6 OF 6

Designer: JAY
Detailer: KSP
Structure Numbers
Sheet Subset: DRAINAGE
Subset Sheets: XX of XX

Project No./Code
IM 0254-394
16311
Sheet Number 410

Korina 7:08:01 PM P:\9904.12 I-25 Santa Fe Alameda Interchange - FHU\16311\Hydraulics\Drawings\Phase 2\16311HYDR_PH2_DETAIL06.dgn
9/27/2010 CDOT-PDFHighQuality_XM.pltcfg

REMOVAL QUANTITIES

(1)

NORTHING	EASTING	REMOVE INLET	REMOVE PIPE	REMOVE MANHOLE	REMOVE END SECTION	PLUG CULVERT	REMARKS
		EA	LF	EA	EA	EA	
681549.4	960199.65					1	
TO			94				
681580.49	960289.11	1					
TO			73				
681631.18	960341.35	1					
TO			135				
681661.05	960475.22				1		
681049.35	960351.43					1	
TO			82				
681074.44	960400.27	1					
TO			166				
681186.70	960525.18	1					
TO			172				
681284.25	960667.11	1					
TO			44				
681319.73	960698.54			1			
TO			33				
681347.47	960721.92			1			
TO			146				
681457.29	960816.79						
TO			60				
681454.98	960756.49	1					
681054.51	960575.66	1					
TO			140				
681186.70	*960525.18*						
679496.41	962086.63						
TO			58				
679438.64	962090.27	1					
TO			296				
679539.89	961809.34	1					
TO			109				
679565.95	961701.34	1					
TO			62				
679504.80	961686.48						
679531.62	961923.55						
TO			47				
679578.28	961931.65						
TO			155				
679699.42	961835.66	1					
TO			306				
679810.79	961547.92	1					
TO			156				
679720.44	961415.00	1					
TO			137				
679641.96	961302.97			1			
TO			80				
679601.91	961234.21	1					
TO			27				
679586.70	961212.35						
SUBTOTAL		**14**	**2578**	**3**	**1**	**2**	

(2)

NORTHING	EASTING	REMOVE INLET	REMOVE PIPE	REMOVE MANHOLE	REMOVE END SECTION	PLUG CULVERT	REMARKS
		EA	LF	EA	EA	EA	
679810.79	961547.92						
TO			225				
679940.87	961361.20	1					
TO			91				
679878.60	961292.28			1			
TO			102				
679807.54	961213.73						
679855.39	961296.82						
TO			25				
679831.81	961284.62	1					
TO			53				
679778.42	961272.12	1					
TO			64				
679807.70	961213.70						
680104.39	961252.78						
TO			229				
679878.60	961292.28						
680113.78	961193.48	1					
TO			138				
680165.19	961064.76			1			
TO			57				
680203.38	961022.42	1					
TO			137				
680225.75	960885.29	1					
TO			19				
680216.78	960865.62	1					
TO			120				
680305.22	960787.53			1			
680216.78	*960865.62*						
TO			97				
680115.96	960869.58	1					
680288.70	960913.80	1					
TO			69				
680225.75	*960885.29*						
680506.87	960970.36	1					
TO			200				
680305.39	960956.16						
679326.98	961164.52					1	
TO			80				
679373.56	961254.35	1					
TO			300				
679137.18	961438.62	1					
679586.7	961212.35						
TO			173				
679460.65	961334.93	1					
SUBTOTAL		**13**	**2179**	**3**	**0**	**1**	

Korina 7:08:21 PM P:\9904.12 I-25 Santa Fe Alameda Interchange - FHU\16311\Hydraulics\Drawings\Phase 2\16311HYDR_PH2_REM TABS01.dgn
9/27/2010 CDOT-PDFHighQuality_XM.pltcfg

Print Date: 9/27/2010
File Name: 16311HYDR_PH2_REM TABS01.dgn
Horiz. Scale: 1:1 Vert. Scale: As Noted
Unit Information Unit Leader Initials

MULLER ENGINEERING CO, INC
CONSULTING ENGINEERS
P: 9904.12 /16311/HYDRAULICS/Drawings
777 S. Wadsworth Blvd.
Suite 4-100
Lakewood, CO 80226
303-988-4939

Sheet Revisions

Date:	Comments	Init.

Colorado Department of Transportation
DEPARTMENT OF TRANSPORTATION
2000 South Holly Street
Denver, CO 80222
Phone: 303-972-9112 FAX: 303-972-9114
Region 6 RLB

As Constructed
No Revisions:
Revised:
Void:

I-25/SANTA FE INTERCHANGE
DRAINAGE REMOVALS TABULATIONS
SHEET 1 OF 2

Designer: JAM
Detailer: KSP
Sheet Subset: DRAINAGE
Structure Numbers
Subset Sheets: XXX of XX

Project No./Code
IM 0254-394
16311
Sheet Number 411

REMOVAL QUANTITIES

(3)

NORTHING	EASTING	REMOVE INLET	REMOVE PIPE	REMOVE MANHOLE	REMOVE END SECTION	PLUG CULVERT	REMARKS
		EA	LF	EA	EA	EA	
679661.83	961034.84	1					
TO			66				
679595.66	961057.75	1					
TO			76				
679548.17	960998.04						
679595.66	*961072.38*						
TO			18				
679605.30	961072.38						
679824.02	961181.45	1					
TO			36				
679807.70	961213.70			1			
TO			221				
679586.70	961212.35						
680303.70	960608.58						
TO			179				
680305.22	960787.53			1			
TO			168				
680305.39	960956.16			1			
TO			159				
680304.15	961114.99						
680437.54	960719.86	1					
TO			147				
680305.22	*960787.53*						
680559.61	960677.52	1					
TO			158				
680679.28	960572.69			1			
TO			94				
680754.37	960516.56	1					
TO			32				
680758.08	960549.44						
680644.75	960559.21	1					
TO			35				
680679.28	*960572.69*						
680711.61	960626.02	1					
TO			61				
680679.28	*960572.69*						
680684.76	960710.46	1					
TO			37				
680731.08	960714.41						
TO			94				
680713.64	960807.17	1					
TO			64				
680708.76	960871.20			1			
SUBTOTAL		**10**	**1645**	**5**	**0**	**0**	

(4)

NORTHING	EASTING	REMOVE INLET	REMOVE PIPE	REMOVE MANHOLE	REMOVE END SECTION	PLUG CULVERT	REMARKS
		EA	LF	EA	EA	EA	
680788.81	960715.16						
TO			172				
680708.76	*960871.20*						
680862.56	960752.68						
TO			46				
680891.94	960715.54	1					
680867.54	960807.33						
TO			153				
680820.74	960955.39						
679858.58	960951.76	1					
TO			61				
679828.38	960898.55						
COLUMN (1)		14	2578	3	1	2	
COLUMN (2)		13	2179	3	0	1	
COLUMN (3)		10	1645	5	0	0	
COLUMN (4)		2	432	0	0	0	
TOTAL		**39**	**6834**	**11**	**1**	**3**	

Korina 7:08:29 PM P:\9904.12 I-25 Santa Fe Alameda Interchange - FHU\16311\Hydraulics\Drawings\Phase 2\16311HYDR_PH2_REM TABS02.dgn
9/27/2010 CDOT-PDF-HighQuality_XM.pltcfg

Print Date: 9/27/2010
File Name: 16311HYDR_PH2_REM TABS02.dgn
Horiz. Scale: 1:1 Vert. Scale: As Noted
Unit Information Unit Leader Initials

MULLER ENGINEERING CO, INC
CONSULTING ENGINEERS
P: 9904.12 /16311/HYDRAULICS/Drawings
777 S. Wadsworth Blvd.
Suite 4-100
Lakewood, CO 80226
303-988-4939

Sheet Revisions		
Date:	Comments	Init.

Colorado Department of Transportation
2000 South Holly Street
Denver, CO 80222
Phone: 303-972-9112 FAX: 303-972-9114
Region 6 RLB

As Constructed
No Revisions:
Revised:
Void:

I-25/SANTA FE INTERCHANGE
DRAINAGE REMOVALS TABULATIONS
SHEET 2 OF 2

Designer: JAM
Detailer: KSP
Sheet Subset: DRAINAGE
Structure Numbers:
Subset Sheets: XXX of XX

Project No./Code
IM 0254-394
16311
Sheet Number 412

STRUCTURE QUANTITIES

STRUCTURE QUANTITIES

STRUCTURE NUMBER	NORTHING	EASTING	INLET							MANHOLE						15" POLYVINYL CHLORIDE PIPE	REINFORCED CONCRETE PIPE				REINFORCED CONCRETE END SECTIONS				38"(S) X 24"(R) ELLIPTICAL CONRETE PIPE	38"(S) X 24"(R) ELLIPTICAL CONRETE PIPE END SECTION	30"(S) X 19"(R) ELLIPTICAL CONRETE PIPE	30"(S) X 19"(R) ELLIPTICAL CONRETE PIPE END SECTION	SOIL RIPRAP TYPE D50 = 9 INCH	SOIL RIPRAP TYPE D50 = 12 INCH	GROUTED BOULDERS	CDOT GEOTEXTILE (DRAINAGE) (CLASS A)	STRUCTURAL CONCRETE (CLASS B)	MODIFY INLET	ASTM C 33 SAND	FILTER MATERIAL (CLASS A)	4" NON-PERFORATED PIPE UNDREDRAIN	4" PERFORATED PIPE UNDREDRAIN	AGGREGATE BASE COURSE	OUTLET STRUCTURE	CLAY PLATING	REMARKS
			TYPE C	BRIDGE DRAIN (SPECIAL)	TRIPLE TYPE 16 (5 FOOT)	DOUBLE VANE GRATE			DOUBLE VANE GRATE (SPECIAL)	SLAB BASE			SPECIAL				18 INCH	24 INCH	30 INCH	36 INCH																				
			H			H			H	H			H									EA																	
			5	EA	EA	5	10	15	10	5	10	20	5	10	15	LF	LF	LF	LF	LF	18"	24"	30"	36"	LF	EA	LF	EA	CY	CY	CY	SY	CY	EA	CY	CY	LF	LF	CY	EA	CY	
	SB 5.0																																							
1	681682.78	960502.66				1																				1				3									
	TO																								44														
2	681669.28	960452.5									1																												
	TO																								41														
3	681653.45	960411.5				1																																
	TO																								72														
4	681623.72	960337.29				1																																
	TO																								72														
5	681573.5	960278.33				1																																
	TO																	330																					
6	681260.71	681260.71					1																																
	TO																	339																					
7	680890.12	960600.55				1																																
	TO																																						
8	680890.12	960600.55		1																																			
	SB 5.1																																						
7	680969.35	960571.76		1																																			PREVIOUSLY ACCOUNTED
	TO															69																							
9	680993.03	960638.17								1																													
	TO															19																							
10	680973.73	960648.77																																					
	SB 6.0																																						
11	679981.82	961178.66					1																																
	TO																	48																					
12	679950.06	961217.27						1																															
	TO																	5																					
13	679945.29	961223.27					1																																
	TO																	42																					
14	679918.25	961258.28					1																																
	TO																	207																					
15	679802.72	961432.26					1																																
	NB 4.0																																						
16	679887.77	961146.22																																					
	TO																		18																				
17	679904.99	961166.28										1																											
	TO																		60																				
12	679950.06	961217.27																																					PREVIOUSLY ACCOUNTED
	TO																		68																				
18	680007.89	961263.44					1																																
	TO																	35																					
19	680037.21	961291.74							1																														
	TO																	132																					
20	679947.07	961389.95					1																																
	TO																	109																					
21	679881.16	961478.44					1																																
	TO																	237																					
22	679771.75	961689.04					1																																
	SUBTOTALS		0	2	0	5	9	1	1	1	1	1	0	0	0	88	0	1484	146	0	0	0	0	0	229	1	0	0	0	6	0	0	0	0	0	0	0	0	0	

Korina 7:08:38 PM P:\9904.12 I-25 Santa Fe Alameda Interchange - FHU\16311\Hydraulics\Drawings\Phase 2\16311HYDR_PH2_STR TABS01.dgn 9/27/2010 CDOT-PDFHighQuality_xM.pltcfg

Print Date: 9/27/2010
File Name: 16311HYDR_PH2_STR TABS01.dgn
Horiz. Scale: 1:1 Vert. Scale: As Noted
Unit Information Unit Leader Initials

MULLER ENGINEERING CO, INC
CONSULTING ENGINEERS
P: 9904.12 /16311/HYDRAULICS/Drawings
777 S. Wadsworth Blvd.
Suite 4-100
Lakewood, CO 80226
303-988-4939

Sheet Revisions

Date:	Comments	Init.

Colorado Department of Transportation
DEPARTMENT OF TRANSPORTATION
2000 South Holly Street
Denver, CO 80222
Phone: 303-972-9112 FAX: 303-972-9114
Region 6 RLB

As Constructed
No Revisions:
Revised:
Void:

I-25/SANTA FE INTERCHANGE
DRAINAGE STRUCTURE TABULATIONS
SHEET 1 OF 4

Designer: JAM
Detailer: KSP
Sheet Subset: DRAINAGE
Structure Numbers
Subset Sheets: XXX of XX

Project No./Code
IM 0254-394
16311
Sheet Number 413

STRUCTURE QUANTITIES

STRUCTURE QUANTITIES

STRUCTURE NUMBER	NORTHING	EASTING	INLET TYPE C H	INLET BRIDGE DRAIN (SPECIAL) H	INLET TRIPLE TYPE 16 (5 FOOT) H	INLET DOUBLE VANE GRATE H			INLET DOUBLE VANE GRATE (SPECIAL) H	MANHOLE SLAB BASE H			MANHOLE SPECIAL H			15" POLYVINYL CHLORIDE PIPE	REINFORCED CONCRETE PIPE 18 INCH	REINFORCED CONCRETE PIPE 24 INCH	REINFORCED CONCRETE PIPE 30 INCH	REINFORCED CONCRETE PIPE 36 INCH	REINFORCED CONCRETE END SECTIONS EA				38"(S) X 24"(R) ELLIPTICAL CONRETE PIPE	38"(S) X 24"(R) ELLIPTICAL CONRETE PIPE END SECTION	30"(S) X 19"(R) ELLIPTICAL CONRETE PIPE	30"(S) X 19"(R) ELLIPTICAL CONRETE PIPE END SECTION	SOIL RIPRAP TYPE D50 = 9 INCH	SOIL RIPRAP TYPE D50 = 12 INCH	GROUTED BOULDERS	CDOT GEOTEXTILE (DRAINAGE) (CLASS A)	STRUCTURAL CONCRETE (CLASS B)	MODIFY INLET	ASTM C 33 SAND	FILTER MATERIAL (CLASS A)	4" NON-PERFORATED PIPE UNDREDRAIN	4" PERFORATED PIPE UNDREDRAIN	AGGREGATE BASE COURSE	OUTLET STRUCTURE	CLAY PLATING	REMARKS
			5	EA	EA	5	10	15	10	5	10	20	5	10	15	LF	LF	LF	LF	LF	18"	24"	30"	36"	LF	EA	LF	EA	CY	CY	CY	SY	CY	EA	CY	CY	LF	LF	CY	EA	CY	
NB 5.0, CONT.																																									
22	679771.75	961689.04																																							PREVIOUSLY ACCOUNTED
	TO																	204																						
23	679697.66	961881.33					1																																		
NB 4.1																																								
24	680003.12	961269.43					1																																		
	TO																6																								
18	680007.89	961263.43																																							PREVIOUSLY ACCOUNTED
	TO																	42																						
25	680035.93	961229.28					1																																		
	TO																	258																						
26	680218.09	961043.9				1																																		
	TO															288																									
27	680451.47	960872.81		1																																				
NB 4.2																																								
26	680451.47	960872.81																																							PREVIOUSLY ACCOUNTED
	TO																	62																						
28	680172.32	960985.64					1																																		
	TO															248																									
29	680372.08	960835.91		1																																				
NB 4.3																																								
28	680172.32	960985.64																																							PREVIOUSLY ACCOUNTED
	TO																125																								
30	680079.78	961072.11				1																																		
NB 4.4																																								
22	679771.75	961689.04																																							PREVIOUSLY ACCOUNTED
	TO																	80																						
31	679592.32	961656.87				1																																		
																	205																								
32	679617.41	961850.4				1																																		
SANTA FE 1.0																																								
29	680549.54	960826.82																										1													
	TO																									50													
30	680602.4	960801.02											1																												
	TO																									274													
31	680362.49	960691.69																										1												
SANTA FE 2.0																																								
36	679531.59	961245.26																																							
	TO																	398																						
37	679168.74	961427.38											1																												
	TO																330																								
38	678869.69	961573.42			1																																			
SUBTOTALS			0	2	1	4	4	0	0	0	0	0	2	0	0	536	666	1044	0	0	1	0	0	0	0	0	324	2	0	0	0	0	0	0	0	0	0	0	0	0	

Korina 7:08:50 PM P:\9904.12 I-25 Santa Fe Alameda Interchange - FHU\16311\Hydraulics\Drawings\Phase 2\16311HYDR_PH2_STR TABS02.dgn
9/27/2010 CDOT-PDFHighQuality-XM.pltcfg

Print Date: 9/27/2010
File Name: 16311HYDR_PH2_STR TABS02.dgn
Horiz. Scale: 1:1 Vert. Scale: As Noted
Unit Information Unit Leader Initials

MULLER ENGINEERING CO, INC
CONSULTING ENGINEERS
P: 9904.12 /16311/HYDRAULICS/Drawings
777 S. Wadsworth Blvd.
Suite 4-100
Lakewood, CO 80226
303-988-4939

Sheet Revisions

Date:	Comments	Init.

Colorado Department of Transportation
DOT DEPARTMENT OF TRANSPORTATION
2000 South Holly Street
Denver, CO 80222
Phone: 303-972-9112 FAX: 303-972-9114
Region 6 RLB

As Constructed
No Revisions:
Revised:
Void:

I-25/SANTA FE INTERCHANGE
DRAINAGE STRUCTURE TABULATIONS
SHEET 2 OF 4

Designer: JAM
Detailer: KSP
Sheet Subset: DRAINAGE
Structure Numbers
Subset Sheets: XXX of XX

Project No./Code
IM 0254-394
16311
Sheet Number 414

STRUCTURE QUANTITIES

STRUCTURE QUANTITIES

STRUCTURE NUMBER	NORTHING	EASTING	INLET							MANHOLE						15" POLYVINYL CHLORIDE PIPE	REINFORCED CONCRETE PIPE				REINFORCED CONCRETE END SECTIONS				38"(S) X 24"(R) ELLIPTICAL CONRETE PIPE	38"(S) X 24"(R) ELLIPTICAL CONRETE PIPE END SECTION	30"(S) X 19"(R) ELLIPTICAL CONRETE PIPE	30"(S) X 19"(R) ELLIPTICAL CONRETE PIPE END SECTION	SOIL RIPRAP TYPE D50 = 9 INCH	SOIL RIPRAP TYPE D50 = 12 INCH	GROUTED BOULDERS	CDOT GEOTEXTILE (DRAINAGE) (CLASS A)	STRUCTURAL CONCRETE (CLASS B)	MODIFY INLET	ASTM C 33 SAND	FILTER MATERIAL (CLASS A)	4" NON-PERFORATED PIPE UNDREDRAIN	4" PERFORATED PIPE UNDREDRAIN	AGGREGATE BASE COURSE	OUTLET STRUCTURE	CLAY PLATING	REMARKS
			TYPE C	BRIDGE DRAIN (SPECIAL)	TRIPLE TYPE 16 (5 FOOT)	DOUBLE VANE GRATE			DOUBLE VANE GRATE (SPECIAL)	SLAB BASE			SPECIAL				18 INCH	24 INCH	30 INCH	36 INCH																				
			H			H			H	H			H								EA																		
			5	EA	EA	5	10	15	10	5	10	20	5	10	15	LF	LF	LF	LF	LF	18"	24"	30"	36"	LF	EA	LF	EA	CY	CY	CY	SY	CY	EA	CY	CY	LF	LF	CY	EA	CY	
RAMP 4 POND																																								SAND FILTER POND
MAINTENANCE ROAD																																						37			
POND																																173	6		20	58	5	105	113			
EAST ALAMEDA POND																																									
MAINTENANCE ROAD																																						186			
POND																																								3227	
NORTHBOUND SANTA FE POND																																									
MAINTENANCE ROAD																																						120			
POND																														209									1091	
DITCHES																																								
680316.26		960768.76																																						
TO																													404											
679865.42		961159.2																																						
680516.84		960866.32																																						
TO																													57											
680461.19		960926.61																																						
680550.85		960848.66																																						
TO																													78									1		SPLASH BLOCK W/ RIPRAP
680667.20		960845.32																																				1		SPLASH BLOCK W/ RIPRAP
BRIDGE DRAINS																																								
679591.51		961192.59																																				1		SPLASH BLOCK W/ RIPRAP
679760.35		961139.69																																				1		SPLASH BLOCK W/ RIPRAP
679933.21		961101.93																																				1		SPLASH BLOCK W/ RIPRAP
680227.04		961058.68																																				1		SPLASH BLOCK W/ RIPRAP
680421.70		961028.63																																				1		SPLASH BLOCK W/ RIPRAP
680566.40		960989.47																																				1		SPLASH BLOCK W/ RIPRAP
680962.77		960938.07																																				1		SPLASH BLOCK W/ RIPRAP
680847.17		960858.99																																						
681122.46		960717.11																																						
TABULATION SHEET 1			0	2	0	5	9	1	1	1	1	1	0	0	0	88	0	1484	146	0	0	0	0	0	229	1	0	0	0	6	0	0	0	0	0	0	0	0	0	0	
TABULATION SHEET 2			0	2	1	4	4	0	0	0	0	0	2	0	0	536	666	1044	0	0	1	0	0	0	0	0	324	2	0	0	0	0	0	0	0	0	0	0	0	0	
TABULATION SHEET 3			4	0	0	1	0	0	0	1	0	0	0	3	1	0	428	213	489	326	2	1	2	1	0	0	0	0	6	0	43	0	0	1	0	0	0	0	2	0	
TABULATION SHEET 4			0	0	0	0	0	0	0	0	0	0	0	0	0	0	0	0	0	0	0	0	0	0	0	0	0	0	0	539	209	173	6	0	20	58	5	105	456	9	4318	
TOTALS			**4**	**4**	**1**	**10**	**13**	**1**	**1**	**2**	**1**	**1**	**2**	**3**	**1**	**624**	**1094**	**2741**	**635**	**326**	**3**	**1**	**2**	**1**	**229**	**1**	**324**	**2**	**6**	**545**	**252**	**173**	**6**	**1**	**20**	**58**	**5**	**105**	**456**	**11**	**4318**	

Print Date: 9/27/2010
File Name: 16311HYDR_PH2_STR TABS03.dgn
Horiz. Scale: 1:1 Vert. Scale: As Noted
Unit Information Unit Leader Initials

MULLER ENGINEERING CO, INC
CONSULTING ENGINEERS
P: 9904.12 /16311/HYDRAULICS/Drawings
777 S. Wadsworth Blvd.
Suite 4-100
Lakewood, CO 80226
303-988-4939

Sheet Revisions		
Date:	Comments	Init.

Colorado Department of Transportation
DEPARTMENT OF TRANSPORTATION
2000 South Holly Street
Denver, CO 80222
Phone: 303-972-9112 FAX: 303-972-9114
Region 6 RLB

As Constructed
No Revisions:
Revised:
Void:

I-25/SANTA FE INTERCHANGE
DRAINAGE STRUCTURE TABULATIONS
SHEET 3 OF 4

Designer: JAM
Detailer: KSP
Sheet Subset: DRAINAGE
Structure Numbers
Subset Sheets: XXX of XX

Project No./Code
IM 0254-394
16311
Sheet Number 415

Karina 7:09:02 PM P:\9904.12 I-25 Santa Fe Alameda Interchange - FHU\16311\Hydraulics\Drawings\Phase 2\16311HYDR_PH2_STR TABS03.dgn
9/27/2010 CDOT-PDFHighQuality_XM.pltcfg

STRUCTURE QUANTITIES

STRUCTURE QUANTITIES

STRUCTURE NUMBER	NORTHING	EASTING	INLET						MANHOLE						15" POLYVINYL CHLORIDE PIPE	REINFORCED CONCRETE PIPE				REINFORCED CONCRETE END SECTIONS				38"(S) X 24"(R) ELLIPTICAL CONRETE PIPE	38"(S) X 24"(R) ELLIPTICAL CONRETE PIPE END SECTION	30"(S) X 19"(R) ELLIPTICAL CONRETE PIPE	30"(S) X 19"(R) ELLIPTICAL CONRETE PIPE END SECTION	SOIL RIPRAP TYPE D50 = 9 INCH	SOIL RIPRAP TYPE D50 = 12 INCH	GROUTED BOULDERS	CDOT GEOTEXTILE (DRAINAGE) (CLASS A)	STRUCTURAL CONCRETE (CLASS B)	MODIFY INLET	ASTM C 33 SAND	FILTER MATERIAL (CLASS A)	4" NON-PERFORATED PIPE UNDREDRAIN	4" PERFORATED PIPE UNDREDRAIN	AGGREGATE BASE COURSE	OUTLET STRUCTURE	REMARKS
			TYPE C	TYPE R	BRIDGE DRAIN (SPECIAL)	DOUBLE VANE GRATE		DOUBLE VANE GRATE (SPECIAL)	SLAB BASE			SPECIAL				18 INCH	24 INCH	30 INCH	36 INCH																					
			H	H		H			H			H								EA																			
			5	5	EA	5	10	15	10	5	10	20	5	10	15	LF	LF	LF	LF	LF	18"	24"	30"	36"	LF	EA	LF	EA	CY	CY	CY	SY	CY	EA	CY	CY	LF	LF	CY	LS	
RAMP 4 POND																																								SAND FILTER POND
MAINTENANCE ROAD																																						37		
POND																															173	6		20	58	5	105	113		
EAST ALAMEDA POND																																								
MAINTENANCE ROAD																																						186		
NORTHBOUND SANTA FE POND																																								
MAINTENANCE ROAD																																						120		
GROUTED BOULDERS																														209										
DITCHES																																								
680316.26	960768.76																																							
TO																													404											
679865.42	961159.2																																							
680516.84	960866.32																																							
TO																													57											
680461.19	960926.61																																							
680550.85	960848.66																																							
TO																													78										1	SPLASH BLOCK W/ RIPRAP
680667.20	960845.32																																						1	SPLASH BLOCK W/ RIPRAP
BRIDGE DRAINS																																							
679591.51	961192.59																																						1	SPLASH BLOCK W/ RIPRAP
679760.35	961139.69																																						1	SPLASH BLOCK W/ RIPRAP
679933.21	961101.93																																						1	SPLASH BLOCK W/ RIPRAP
680227.04	961058.68																																						1	SPLASH BLOCK W/ RIPRAP
680421.70	961028.63																																						1	SPLASH BLOCK W/ RIPRAP
680566.40	960989.47																																						1	SPLASH BLOCK W/ RIPRAP
680962.77	960938.07																																						1	SPLASH BLOCK W/ RIPRAP
680847.17	960858.99																																							
681122.46	960717.11																																							
TABULATION SHEET 1			0	0	2	5	9	1	1	1	1	1	0	0	0	88	0	1484	146	0	0	0	0	0	229	1	0	0	0	6	0	0	0	0	0	0	0	0	0	
TABULATION SHEET 2			0	1	2	4	4	0	0	0	0	0	2	0	0	536	666	1044	0	0	1	0	0	0	0	0	324	2	0	0	0	0	0	0	0	0	0	0	0	
TABULATION SHEET 3			4	0	0	1	0	0	0	1	0	0	0	3	1	0	428	213	489	326	2	1	2	1	0	0	0	0	6	0	43	0	0	1	0	0	0	0	0	2	
TABULATION SHEET 4			0	0	0	0	0	0	0	0	0	0	0	0	0	0	0	0	0	0	0	0	0	0	0	0	0	0	0	539	209	173	6	0	20	58	5	105	456	9	
TOTALS			**4**	**1**	**4**	**10**	**13**	**1**	**1**	**2**	**1**	**1**	**2**	**3**	**1**	**624**	**1094**	**2741**	**635**	**326**	**3**	**1**	**2**	**1**	**229**	**1**	**324**	**2**	**6**	**545**	**252**	**173**	**6**	**1**	**20**	**58**	**5**	**105**	**456**	**11**	

Karina 7:09:15 PM P:\9904.12 I-25 Santa Fe Alameda Interchange - FHU\16311\Hydraulics\Drawings\Phase 2\16311HYDR_PH2_STR TABS04.dgn
9/27/2010 CDOT-PDFHighQuality_XM.pltcfg

Print Date: 9/27/2010
File Name: 16311HYDR_PH2_STR TABS04.dgn
Horiz. Scale: 1:1 Vert. Scale: As Noted
Unit Information Unit Leader Initials

MULLER ENGINEERING CO, INC
CONSULTING ENGINEERS
P: 9904.12 /16311/HYDRAULICS/Drawings
777 S. Wadsworth Blvd.
Suite 4-100
Lakewood, CO 80226
303-988-4939

Sheet Revisions		
Date:	Comments	Init.

Colorado Department of Transportation
DEPARTMENT OF TRANSPORTATION
2000 South Holly Street
Denver, CO 80222
Phone: 303-972-9112 FAX: 303-972-9114
Region 6 RLB

As Constructed
No Revisions:
Revised:
Void:

I-25/SANTA FE INTERCHANGE
DRAINAGE STRUCTURE TABULATIONS
SHEET 4 OF 4

Designer: JAM
Detailer: KSP
Sheet Subset: DRAINAGE
Structure Numbers:
Subset Sheets: XXX of XX

Project No./Code
IM 0254-394
16311
Sheet Number 416

POTHOLE NUMBER	UTILITY OWNERSHIP	UTILITY USE	MATERIAL TYPE	DIAMETER	DEPTH TO TOP (INCHES)	DEPTH TO BOTTOM (INCHES)	NORTHING	EASTING	GROUND ELEVATION	FIELD COMMENTS
UT-1	DENVER WATER	WATER	----------	----------	----------	----------	----------	----------	----------	24" WATER NOT FOUND. FOUND POSSIBLE OLD GAS LINE 6", STEEL 49"+ 55"B
UT-2	CCD TRAFFIC	ITS	PVC	2"	21	23	681986.72	960385.09	5225.98	11' WEST OF KALAMATH
UT-3	CCD TRAFFIC	ITS	PVC	2"	17	19	682129.57	960249.06	5226.65	10' WEST OF KALAMATH
UT-4	QWEST	TELEPHONE	DUCT BANK	4"	51	54	682361.19	960169.90	5231.12	UNABLE TO POTHOLE, LOCATES NOT COMPLETE
UT-5	XCEL/QWEST	ELECTRIC/TELEPHONE	PVC	4"	33	37	682398.17	960151.41	5232.30	TWO LINES SIDE BY SIDE. POSSIBLE CONCRETE CAP UNDER POWER
UT-6	XCEL/QWEST	ELECTRIC/TELEPHONE	PVC	4"	36	40	682393.30	960153.02	5232.08	TWO LINES SIDE BY SIDE
UT-7	XCEL/QWEST	ELECTRIC/TELEPHONE	PVC	4"	40	44	682417.79	960142.82	5233.18	TWO LINES SIDE BY SIDE
UT-8	UNKNOWN	TELEPHONE	----------	----------	----------	----------	----------	----------	----------	NO POTHOLE INFORMATION PROVIDED
UT-9	UNKNOWN	TELEPHONE	----------	----------	----------	----------	----------	----------	----------	NO POTHOLE INFORMATION PROVIDED
UT-10	UNKNOWN	TELEPHONE	----------	----------	----------	----------	----------	----------	----------	NO POTHOLE INFORMATION PROVIDED
UT-11	XCEL	GAS	STEEL PIPE	4"	48	52	683525.72	959749.82	5236.49	
UT-12	DENVER WATER	WATER	COPPER	1"	47"	48"	6834466.83	959772.60	5236.65	
UT-13	DENVER WATER	WATER	COPPER	1"	45"	46"	683403.53	959798.87	5237.08	
UT-14	DENVER WATER	WATER	STEEL PIPE	8"	62"	70"	683332.95	959828.22	5237.71	
UT-15	DENVER WATER	WATER	COPPER	1"	32"	33"	683312.40	959838.03	5237.64	LOCATE OFF BY 1'6"
UT-16	DENVER WATER	WATER	COPPER	1"	43"	45"	683212.99	959876.52	5238.58	
UT-17	UNKNOWN	TELEPHONE	----------	----------	----------	----------	----------	----------	----------	NO LOCATES PROVIDED
UT-18	XCEL	ELECTRIC	STEEL PIPE	2"	7	9	682234.30	959879.76	5229.61	1' SOUTH OF SIDEWALK, 5' NORTH OF STREET LIGHT CABINET
UT-19	QWEST	FIBER OPTIC	DUCT BANK		35	51	682299.67	959846.79	5229.74	
UT-20	UNKNOWN	TELEPHONE	POLY	2-2"	83	87	682334.75	959832.29		
UT-21	XCEL	ELECTRIC	CABLE	1"	32	33	682374.00	959820.37	5228.87	5' NORTH OF ST-LIGHT CABINET
UT-22	XCEL	ELECTRIC	----------	----------	----------	----------	----------	----------	----------	LOCATION POTHOLED, NO UTILITIES FOUND
UT-23	DENVER WATER	WATER	STEEL PIPE	24"	96	120	682272.21	960286.15	5229.03	FOUND POSSIBLE OLD GAS LINE 6", STEEL 43"+ 49"B
UT-24	QWEST	FIBER OPTIC	D.I.P	16"	31	47	682303.81	960357.27	5228.60	
UT-25	DENVER WATER	WATER	STEEL PIPE	16"	69	85	682321.34	960218.45	5230.10	LOCATE OFF POT HOLE MOVED 2' EAST,
UT-26	DENVER WATER	GAS	STEEL PIPE	2"	30	32	682203.81	959596.58	5227.86	
UT-27	DENVER WATER	WATER	STEEL PIPE	16"	65	81	682525.38	960136.98	5236.49	FOUND POSSIBLE OLD GAS LINE 2", STEEL 43"+ 45"B
UT-28	CDOT	STORMSEWER	----------	----------	----------	----------	----------	----------	----------	NO POTHOLE INFORMATION PROVIDED
UT-29	CDOT	STORMSEWER	----------	----------	----------	----------	----------	----------	----------	NO POTHOLE INFORMATION PROVIDED
UT-30	DENVER WATER	WATER	STEEL PIPE	16"	63	79	683362.23	959799.14	5237.27	

UT-51	DENVER WATER	WATER	CAST IRON	12"	61	73	678991.72	961520.16	5235.68	WATER VALVE 6 FOOT FROM POTHOLE
UT-52	DENVER WATER	WATER	CAST IRON	12"	69	81	679210.86	961363.66	5235.74	
UT-53	DENVER WATER	WATER	CAST IRON	12"	65	69	679329.73	961288.94	5235.09	8" TO WEST
UT-54	DENVER WATER	WATER	CAST IRON	12"	57	69	679432.15	961228.88	5234.11	1' EAST
UT-55	QWEST	TELEPHONE		-	-	-	679576.66	961199.78	5232.82	NO LOCATE, NOT FOUND, CLEARED BY OWNER
UT-56	QWEST	TELEPHONE		-	-	-	679625.44	961064.17	5234.64	NO LOCATE, CLEARED BY OWNER, NOT POTHOLED
UT-57	QWEST	TELEPHONE		-	-	-	679678.1	960917.8	5230.64	NOT POTHOLED, MARKED BY LOCATOR'S AS "ALL CLEAR"
UT-58	UNKNOWN	FIBER OPTIC		-	-	-	679689.49	960934.68	5233.18	NOT POTHOLED, MARKED BY LOCATOR'S AS "ALL CLEAR"
UT-59	UNKNOWN	FIBER OPTIC		-	-	-	679690.67	961022.92	5234.87	NOT POTHOLED, MARKED BY LOCATOR'S AS "ALL CLEAR"
UT-60	UNKNOWN	FIBER OPTIC		-	-	-	679688.74	961122.84	5232.84	NOT POTHOLED, MARKED BY LOCATOR'S AS "ALL CLEAR"
UT-61	DENVER WATER	WATER	CAST IRON	12"	53		679004.08	961982.85	5241.01	WATER VALVE 14'-4" WEST, MH 15'-0" EAST
UT-62	DENVER WATER	WATER	CAST IRON	12"	87	99	680611.29	961021.18	5232.91	
UT-63	CDOT	ITS	PVC				679814.96	961404.78	5242.6	
UT-64	CDOT	ITS	PVC				679990.83	961334.20	5233.59	
UT-65	CDOT	ITS	PVC				680199.52	961187.87	5234.00	
UT-66	DENVER WATER	WATER	CAST IRON	12"			680407.91	961049.56	5236.13	
UT-67	CDOT	ITS	PVC				680404.44	961041.19	5236.56	
UT-68	DENVER WATER	WATER	CAST IRON	12"			680397.03	961022.00	5237.18	
UT-69	CDOT	ITS	PVC				681454.11	960745.91	5226.76	
UT-70	CCD TRAFFIC	FIBER OPTIC	PVC				681454.20	960740.20	5226.51	

Print Date: 9/27/2010
File Name: 16311HA UTIL_PH2_Pothole_Log.dgn
Horiz. Scale: 1:1 Vert. Scale: As Noted
Unit Information Unit Leader Initials

FELSBURG HOLT & ULLEVIG 6300 South Syracuse Way Centennial, CO 80111

Sheet Revisions

Date:	Comments	Init.

Colorado Department of Transportation
DEPARTMENT OF TRANSPORTATION
2000 South Holly Street
Denver, CO 80222
Phone: 303-972-9112 FAX: 303-972-9114
Region 6 RLB

As Constructed
No Revisions:
Revised:
Void:

I-25/SANTA FE INTERCHANGE
STAGE 1.2/1.3 - POTHOLE LOG

Designer: M. HARTWIG
Detailer: D. DYER
Sheet Subset: UTILITY
Structure Numbers
Subset Sheets: 1 of 1

Project No./Code
IM 0254-394
16311
Sheet Number 417

dyer 12:36:23 PM P:\FHU\Santa Fe & I-25\16311\Utilities\Drawings\16311HA UTIL_PH2_Pothole_Log.dgn
9/27/2010 CDOT-DefaultPrinter_XM.pltcfg

MANHOLE NUMBER	SURVEY MANHOLE NUMBER	UTILITY OWNERSHIP	UTILITY USE	RIM ELEVATION	INVERT IN	INVERT IN	INVERT IN	INVERT OUT	INVERT OUT	NORTHING	EASTING	ADJ./ MOD MANHOLE RIM ELEV.	HCL	STATION	OFFSET	COMMENTS
MH+001	NA	MWW	SANITARY	NA	NA					678266.53	963517.55		ULTIMATE I-25	NA	NA	NO SURVEY DATA PROVIDED
MH+002	NA	MWW	SANITARY	NA	NA					678393.72	963500.17		ULTIMATE I-25	NA	NA	NO SURVEY DATA PROVIDED
MH+003	NA	MWW	SANITARY	NA	NA					678717.25	963494.32		ULTIMATE I-25	NA	NA	NO SURVEY DATA PROVIDED
MH+004	NA	MWW	SANITARY	NA	NA					678724.35	963501.14		ULTIMATE I-25	NA	NA	NO SURVEY DATA PROVIDED
MH+005	NA	MWW	SANITARY	NA	NA					678939.40	963032.28		ULTIMATE I-25	603+97.42	36.78 LT	NO SURVEY DATA PROVIDED
MH+006	NA	MWW	SANITARY	NA	NA					678940.73	963083.77	60	ULTIMATE I-25	603+61.67	0.30 RT	NO SURVEY DATA PROVIDED
MH+007	NA	MWW	SANITARY	NA	NA					679082.32	963043.33		ULTIMATE I-25	604+89.86	72.78 RT	NO SURVEY DATA PROVIDED
MH+008	NA	MWW	SANITARY	NA	NA					679133.44	962783.64		ULTIMATE I-25	607+19.36	58.36 LT	NO SURVEY DATA PROVIDED
MH+009	NA	MWW	SANITARY	NA	NA					679155.67	962800.39		ULTIMATE I-25	607+19.23	30.52 LT	NO SURVEY DATA PROVIDED
MH+010	NA	MWW	SANITARY	NA	NA					679313.86	962580.86		ULTIMATE I-25	609+93.13	12.43 LT	NO SURVEY DATA PROVIDED
MH+011	29629	MWW	SANITARY	5243.27	5225.92				5225.92	679408.84	961983.93		ULTIMATE I-25	615+85.94	147.61 LT	30"
MH+012	2345	MWW	SANITARY	5246.97	5226.59				5226.58	679449.61	962010.00		ULTIMATE I-25	615+76.30	100.21 LT	30"
MH+013	35573	MWW	SANITARY	5247.83	5225.31				5225.79	679421.60	962147.63		ULTIMATE I-25	614+37.87	76.92 LT	30"
MH+014	33572	MWW	SANITARY	5248.91	5225.60				5230.58	679457.69	962183.27		ULTIMATE I-25	614+17.39	30.39 LT	30"
MH+015	33571	MWW	SANITARY	5249.15	5225.62				5225.62	679471.43	962184.05		ULTIMATE I-25	614+21.71	17.25 LT	30"
MH+016	33570	MWW	SANITARY	5249.61	5225.08				5225.06	679644.32	962160.93		ULTIMATE I-25	615+05.44	135.77 RT	30"
MH+017	41968	DWWM	SANITARY	5251.43						679742.55	961172.01		ULTIMATE I-25	624+19.14	193.60 LT	46" BRICK, APPROX LOC
MH+018	24241	DWWM	SANITARY	5246.71					5235.39	679768.43	961821.24		ULTIMATE I-25	618+67.04	129.43 RT	8" FROM NORTH
MH+019	24253	DWWM	SANITARY	5243.03	5234.15				5234.13	679767.74	961768.68		ULTIMATE I-25	619+15.84	109.89 RT	8"
MH+020	24247	DWWM	SANITARY	5241.84	5232.79				5232.80	679792.83	961618.64		ULTIMATE I-25	620+69.63	76.12 RT	8"
MH+021	24250	DWWM	SANITARY	5235.43	5230.60				5230.60	679947.87	961391.60		ULTIMATE I-25	623+58.13	100.47 RT	8"
MH+022	24253	DMWW	SANITARY	5233.69	5227.48				5227.41	680208.66	961222.01		ULTIMATE I-25	626+81.73	196.08 RT	8"
MH+023	17354	MWW	SANITARY	5234.94	5227.21				5227.15	680233.61	961168.64		ULTIMATE I-25	627+43.45	175.63 RT	10"
MH+024	17043	MWW	SANITARY	5235.34						680289.50	961196.35		ULTIMATE I-25	627+68.01	234.11 RT	NO PIPES 5' DEEP
MH+025	17042	MWW/DWD	SANITARY	5235.83	5226.53	5235.94			5225.33	680328.69	961168.25		ULTIMATE I-25	628+23.33	239.41 RT	36" SANITARY SEWER IN FROM SE & NE 42" OUT TO N- 10' DEEP
MH+026	17354	DWWM	SANITARY	5237.09	5224.62	5227.86	5231.60		5224.54	680360.79	961166.13		ULTIMATE I-25	628+53.28	258.68 RT	6" SANITARY SEWER APPROXIMATE LOCATION
MH+027	2376	MWW	SANITARY	5232.56	5223.65				5223.48	680714.34	961052.27		ULTIMATE I-25	632+87.95	356.99 RT	36"
MH+028	8486	MWW	SANITARY	5236.05	5224.12				5224.05	680848.03	961052.62		ULTIMATE I-25	634+44.19	410.77 RT	36"
MH+029	8556	MWW	SANITARY	5238.50	5223.38				5222.26	680947.77	961160.46		ULTIMATE I-25	635+11.94	546.25 RT	46" BRICK PIPE 2 FT. DIA.
MH+030	8555	DWWM	SANITARY	5244.84						680966.90	961225.69		ULTIMATE I-25	635+08.05	614.12 RT	2FT DIA
MH+031	2096	MWW	SANITARY	5230.22	5222.82				5222.82	681228.82	960949.17		ULTIMATE I-25	638+47.63	441.63 RT	42" FROM SOUTHEAST 46" BRICK TO NORTHWEST - 7.4 DEEP
MH+032	20483	MWW	SANITARY	5228.49	5221.75				5221.73	681789.43	960736.21		ULTIMATE I-25	644+35.90	431.83 RT	46" BRICK
MH+033																REMOVED IN PHASE 1
MH+034																REMOVED IN PHASE 1
MH+035																REMOVED IN PHASE 1
MH+036																REMOVED IN PHASE 1
MH+037																REMOVED IN PHASE 1
MH+038	22068	MWW	SANITARY	5226.43						681701.44	959809.58		ULTIMATE I-25	647+06.09	459.24 LT	NO INVERT DATA
MH+039																REMOVED IN PHASE 1
MH+040	20550	MWW	SANITARY	5227.96 (VAULT)	5227.86 (GRATE LID)	5210.19				681911.84	959984.50		ULTIMATE I-25	648+33.74	213.99 LT	WITHIN VAULT
MH+041	20552	MWW	SANITARY	5227.80					5210.15	681908.75	959981.88		ULTIMATE I-25	648+31.96	217.66 LT	SIPHON BEGINS 24" RCP
MH+042	20551	MWW	SANITARY	5227.98					5210.28	681913.12	959980.88		ULTIMATE I-25	648+36.49	216.75 LT	SIPHON BEGINS 24" RCP
MH+043	22070	MWW	SANITARY	5226.39	5210.17					681854.66	959772.14		ULTIMATE I-25	648+72.08	430.86 LT	VAULT 24" E
MH+044	22071	MWW	SANITARY	5226.36	5209.6 E				5209.79 N	681858.70	959770.69		ULTIMATE I-25	648+76.64	430.48 LT	VAULT 5226.37
MH+045	22069	MWW	SANITARY	5226.53						681851.19	959758.39		ULTIMATE I-25	648+74.81	444.67 LT	NO INVERT DATA
MH+046																REMOVED IN PHASE 1
MH+047	20520	DWWM	SANITARY	5227.11	5218.08				5218.01	682188.00	960317.20		ULTIMATE I-25	649+45.46	203.95 RT	8"
MH+048	21474	MWW	SANITARY	5227.18	5209.39				5209.39	682114.20	959676.39		ULTIMATE I-25	651+49.23	408.06 LT	
MH+049	21475	MWW	SANITARY	5227.32	5211.32				5204.34 (CALC)	682104.95	959651.70		ULTIMATE I-25	651+51.26	434.35 LT	
MH+050	20228	MWW	SANITARY	5228.56					5201.06	682216.40	959612.90		ULTIMATE I-25	652+68.67	422.45 LT	NO INVERT IN DATA

dgyer 10:53:48 AM P:\FHU\Santa Fe & I-25\16311\Utilities\Drawings\16311HA UTIL_PH2_Manhole_Log01.dgn
9/27/2010 CDOT-DefaultPrinter_XM.pltcfg

Print Date: 9/27/2010
File Name: 16311HA UTIL_PH2_Manhole_Log01.dgn
Horiz. Scale: 1:1 Vert. Scale: As Noted
Unit Information Unit Leader Initials

FELSBURG HOLT & ULLEVIG 6300 South Syracuse Way Centennial, CO 80111

Sheet Revisions

Date:	Comments	Init.

Colorado Department of Transportation
DEPARTMENT OF TRANSPORTATION
2000 South Holly Street
Denver, CO 80222
Phone: 303-972-9112 FAX: 303-972-9114
Region 6 RLB

As Constructed
No Revisions:
Revised:
Void:

I-25/SANTA FE INTERCHANGE
MANHOLE LOG

Designer: M. HARTWIG
Detailer: E. LANG
Sheet Subset: UTILITIES
Structure Numbers
Subset Sheets: 1 of 2

Project No./Code
IM 0254-394
16311
Sheet Number 418

MANHOLE NUMBER	SURVEY MANHOLE NUMBER	UTILITY OWNERSHIP	UTILITY USE	RIM ELEVATION	INVERT IN	INVERT IN	INVERT IN	INVERT OUT	INVERT OUT	NORTHING	EASTING	ADJ./ MOD MANHOLE RIM ELEV.	HCL	STATION	OFFSET	COMMENTS
MH+051	40917	MWW	SANITARY	5222.55	5210.71				5210.71	681909.03	959331.43		ULTIMATE I-25	651+08.94	807.40 LT	LESS THAN 30" PIPE
MH+052	40920	MWW	SANITARY	5223.09					5210.12	682101.36	959343.33		ULTIMATE I-25	652+78.25	715.38 LT	LARGER THAN 10" PIPE IN FROM SOUTH
MH+053	40923	MWW	SANITARY	5223.44	5209.41				5209.42	682231.27	959342.81		ULTIMATE I-25	653+96.22	660.99 LT	LARGER THAN 10" PIPE
MH+054	40926	MWW	SANITARY	5223.14	5207.76	5207.81 S			5207.65	682251.60	959331.10		ULTIMATE I-25	654+19.59	663.01 LT	46" BRICK SURVEYED 30" PLAN
MH+055	20230	MWW	SANITARY	5228.56	5208.57 (CALC)				5208.66	682243.43	959615.16		ULTIMATE I-25	652+92.21	408.99 LT	TOTAL DEPTH NOT MEASURED DUE TO LANDING PLATFORM ABOVE FLOW LINE
MH+056	20229	MWW	SANITARY	5228.66	5208.89 (LANDING)	5208.57 (CALC)				682242.62	959625.61		ULTIMATE I-25	652+87.07	399.86 LT	TOTAL DEPTH NOT MEASURED DUE TO LANDING PLATFORM ABOVE FLOW LINE
MH+057	20231	MWW	SANITARY	5228.76	5208.89 (LANDING)	5208.57 (CALC)				682246.24	959632.29		ULTIMATE I-25	652+87.53	392.27 LT	TOTAL DEPTH NOT MEASURED DUE TO LANDING PLATFORM ABOVE FLOW LINE
MH+058	NA	DWWM	SANITARY	5228.73	5221.82				5220.59	682245.20	960201.36	5229.93	ULTIMATE I-25	650+46.23	123.11RT	FIELD VERIFIED WITH SURVEY
MH+059	20318	DWWM	SANITARY	5223.21						682302.19	959307.58		ULTIMATE I-25	654+75.39	662.96 RT	
MH+060	40854	DWWM	SANITARY	5229.90	5223.71				5223.39	682370.34	960118.67		ULTIMATE I-25	651+94.59	101.01 RT	8"
MH+061	42593	DWWM	SANITARY	5220.00						682408.00	960075.00		ULTIMATE I-25	652+47.17	77.33 RT	8" APPROXIMATE LOCATION
MH+062	20602	DWWM	SANITARY	5232.53	5223.57 W	5223.01 E			5223.00	682398.14	960207.34		ULTIMATE I-25	651+82.34	193.13 RT	8", PROBABLE GROUNDWATER DRAIN FOR UPSTREAM AREA OF SANITARY SEWER
MH+063	26309	MWW	SANITARY	5243.31	5224.72	5223.99			5223.95	682462.06	960387.69		ULTIMATE I-25	651+64.10	383.60 RT	8" APPROXIMATE LOCATION
MH+064	26304	DWWM	SANITARY	5235.83	5226.31	5225.28			5225.25	682507.42	960517.75		ULTIMATE I-25	651+50.29	520.65 RT	8" APPROXIMATE LOCATION
MH+065	20536	DWWM	SANITARY	5229.96	5224.95				5225.01	682734.03	959928.50		ULTIMATE I-25	656+04.46	82.21 RT	8"
MH+066	40855	MWW	SANITARY	5222.97	5196.47					682850.28	959390.49		ULTIMATE I-25	659+40.02	354.92 LT	
MH+067	28908	DWWM	SANITARY	5230.61	5226.76				5226.80	683109.79	959731.07		ULTIMATE I-25	660+27.92	64.20 RT	8"
MH+068	35118	DWWM	SANITARY	5232.77	5227.67				5227.68	683323.70	959645.00		ULTIMATE I-25	662+57.62	79.44 RT	8"
MH+069	24031	MWW	SANITARY	5240.82					5230.55	683368.94	959978.00		ULTIMATE I-25	661+54.04	398.95 RT	TRUNK FROM ALLEY 10.4' DEEP-LOCAL FROM EAST APPROX 9.4' DEEP
MH+070	21337	DWWM	SANITARY	5222.20						683464.44	959179.77		ULTIMATE I-25	665+88.54	276.74 LT	
MH+071	35125	DWWM	SANITARY	5232.45	5228.20				5228.11	683507.95	959570.02		ULTIMATE I-25	664+55.70	92.76 RT	8"
MH+072	27538	DWWM	SANITARY	5231.62	5228.34				5228.17	683552.82	959553.27		ULTIMATE I-25	665+03.32	97.49 RT	8"
MH+073	23010	DWWM	SANITARY	5237.07	5228.54				5228.54	683569.51	959728.09		ULTIMATE I-25	664+41.49	261.80 RT	8" VIT CLAY TILE
MH+074	21336	DWWM	SANITARY	5223.47						683614.53	959090.77		ULTIMATE I-25	667+62.49	290.51 LT	
MH+075	21335	DWWM	SANITARY	5223.07						683599.95	959053.98		ULTIMATE I-25	667+65.61	329.96 LT	
MH+076	NA	MWW	SANITARY							683631.96	959009.12		ULTIMATE I-25	668+21.64	355.8 LT	
MH+077	22711	DWWM	SANITARY	5237.24					5228.21	683699.92	959714.11		ULTIMATE I-25	665+64.51	306.69 RT	8"
MH+078	NA	DWWM	SANITARY							683720.97	959710.01		ULTIMATE I-25	665+85.22	312.28 RT	NO SURVEY DATA PROVIDED
MH+079	NA	DWWM	SANITARY							683995.03	959314.74		ULTIMATE I-25	669+95.17	91.25 RT	NO SURVEY DATA PROVIDED
MH+080	NA	DWWM	SANITARY							684250.80	959312.66		ULTIMATE I-25	671+86.08	239.81 RT	NO SURVEY DATA PROVIDED
MH+081	NA	DWWM	SANITARY							684250.80	959199.73		ULTIMATE I-25	672+51.52	153.28 RT	NO SURVEY DATA PROVIDED
MH+082	NA	DWWM	SANITARY							684399.57	959026.26		ULTIMATE I-25	674+62.51	133.39 RT	NO SURVEY DATA PROVIDED
MH+083	NA	DWWM	SANITARY							684524.22	958891.97		ULTIMATE I-25	676+42.14	139.49 RT	NO SURVEY DATA PROVIDED

Print Date: 9/27/2010
File Name: 16311HA UTIL_PH2_Manhole_Log02.dgn
Horiz. Scale: 1:1 Vert. Scale: As Noted
Unit Information Unit Leader Initials

Sheet Revisions

Date:	Comments	Init.

Colorado Department of Transportation
DEPARTMENT OF TRANSPORTATION
2000 South Holly Street
Denver, CO 80222
Phone: 303-972-9112 FAX: 303-972-9114
Region 6 RLB

As Constructed
No Revisions:
Revised:
Void:

I-25/SANTA FE INTERCHANGE
MANHOLE LOG

Designer: M. HARTWIG
Detailer: E. LANG
Sheet Subset: UTILITIES
Structure Numbers
Subset Sheets: 2 of 2

Project No./Code
IM 0254-394
16311
Sheet Number 419

dgyer 10:54:08 AM P:\FHU\Santa Fe & I-25\16311\Utilities\Drawings\16311HA UTIL_PH2_Manhole_Log02.dgn
9/27/2010 CDOT-DefaultPrinter_XM.pltcfg

TABULATION OF STAGE 1.2/1.3 UTILITY REMOVALS AND ADJUSTMENTS

STATION-OFFSET	ALIGNMENT NAME	REMOVALS-ADJUSTS			OWNER	REMARKS
		REMOVAL OF STRUCTURE	REMOVAL OF PIPE	ADJUST MANHOLE		
		EACH	LF	EACH		
620+69.63, 76.12' RT.	HCL ULTIMATE I-25	1			DWWM	SANITARY SEWER MANHOLE
620+69.63, 76.12' RT. TO 623+58.13, 100.47' RT.	HCL ULTIMATE I-25		275		DWWM	8" SANITARY SEWER LINE
623+58.13, 100.47' RT.	HCL ULTIMATE I-25	1			DWWM	SANITARY SEWER MANHOLE
623+58.13, 100.47' RT. TO 623+92.50, 113.75' RT.	HCL ULTIMATE I-25		35		DWWM	8" SANITARY SEWER LINE
626+81.73, 196.08' RT.	HCL ULTIMATE I-25			1	DWWM	SANITARY SEWER MANHOLE
627+43.45, 175.63' RT.	HCL ULTIMATE I-25			1	DWWM	SANITARY SEWER MANHOLE
620+03.89, 91.99' RT. TO 620+68.72, 76.80' RT.	HCL ULTIMATE I-25		65		DWWM	8" SANITARY SEWER LINE
632+14.37, 229.55' RT.	HCL ULTIMATE I-25			1	DWD	WATERLINE MANHOLE
645+03.24. 300.09' RT.	HCL ULTIMATE I-25			1	DWWM	SANITARY SEWER MANHOLE
645+43.69, 120.73' RT.	HCL ULTIMATE I-25			1	DWWM	SANITARY SEWER MANHOLE
TOTALS:		2	375	4		

ddyer 12:38:55 PM P:\FHU\Santa Fe & I-25\16311\Utilities\Drawings\16311HA UTIL_PH2_Utility_Tab01.dgn
9/27/2010 CDOT-DefaultPrinter_XM.pltcfg

Print Date: 9/27/2010
File Name: 16311HA UTIL_PH2_Utility_Tab01.dgn
Horiz. Scale: 1:1 Vert. Scale: As Noted
Unit Information Unit Leader Initials

FELSBURG HOLT & ULLEVIG 6300 South Syracuse Way Centennial, CO 80111

Sheet Revisions		
Date:	Comments	Init.

Colorado Department of Transportation
DEPARTMENT OF TRANSPORTATION
2000 South Holly Street
Denver, CO 80222
Phone: 303-972-9112 FAX: 303-972-9114
Region 6 RLB

As Constructed
No Revisions:
Revised:
Void:

I-25/SANTA FE INTERCHANGE
STAGE 1.2/1.3 - UTILITY
QUANTITY TABULATION

Designer: M. HARTWIG
Detailer: D. DYER
Sheet Subset: UTILITY
Structure Numbers
Subset Sheets: 1 of 1

Project No./Code
IM 0254-394
16311
Sheet Number 420

Know what's **below.**
Call before you dig.

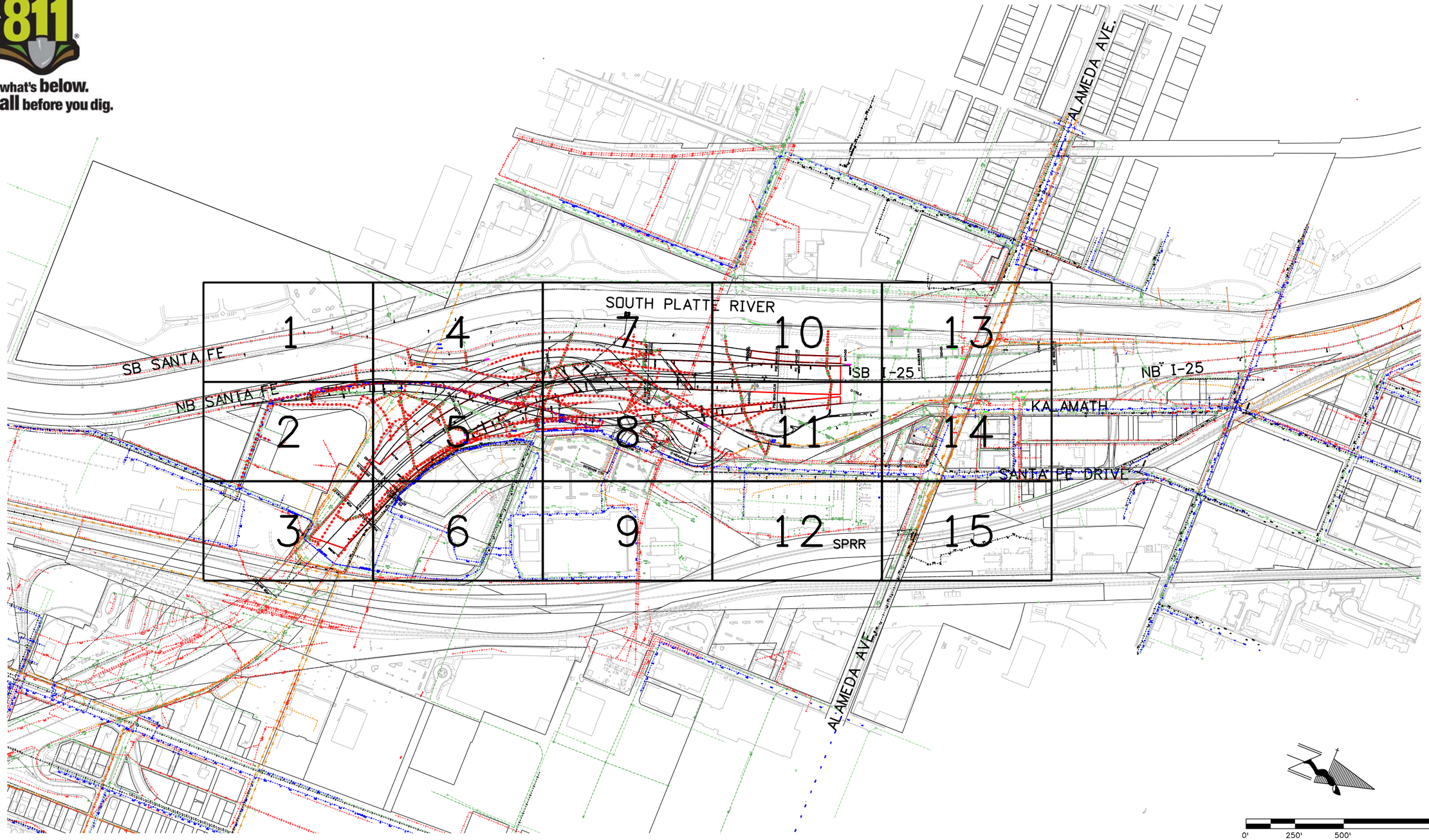

Print Date: 9/27/2010	Sheet Revisions	Colorado Department of Transportation	As Constructed
File Name: 16311HA UTIL_PH2_I25_KeyMap_01.dgn	Date: / Comments / Init.	2000 South Holly Street Denver, CO 80222 Phone: 303-972-9112 FAX: 303-972-9114	No Revisions:
Horiz. Scale: 1:500 Vert. Scale: As Noted		Region 6 RLB	Revised:
Unit Information Unit Leader Initials			Void:
FELSBURG HOLT & ULLEVIG 6300 South Syracuse Way Centennial, CO 80111			

I-25/SANTA FE INTERCHANGE
STAGE 1.2/1.3 - UTILITY KEYMAP

Designer:	M. HARTWIG	Structure Numbers	
Detailer:	D. DYER		
Sheet Subset:	UTILITY	Subset Sheets:	1 of 1

Project No./Code
IM 0254-394
16311
Sheet Number 421

dyer 12:53:40 PM P:\FHU\Santa Fe & I-25\16311\Utilities\Drawings\16311HA UTIL_PH2_I25_KeyMap_01.dgn
9/27/2010 CDOT-DefaultPrinter_XM.pltcfg

Know what's **below.**
Call before you dig.

1	4	7	10	13
2	5	8	11	14
3	6	9	12	15

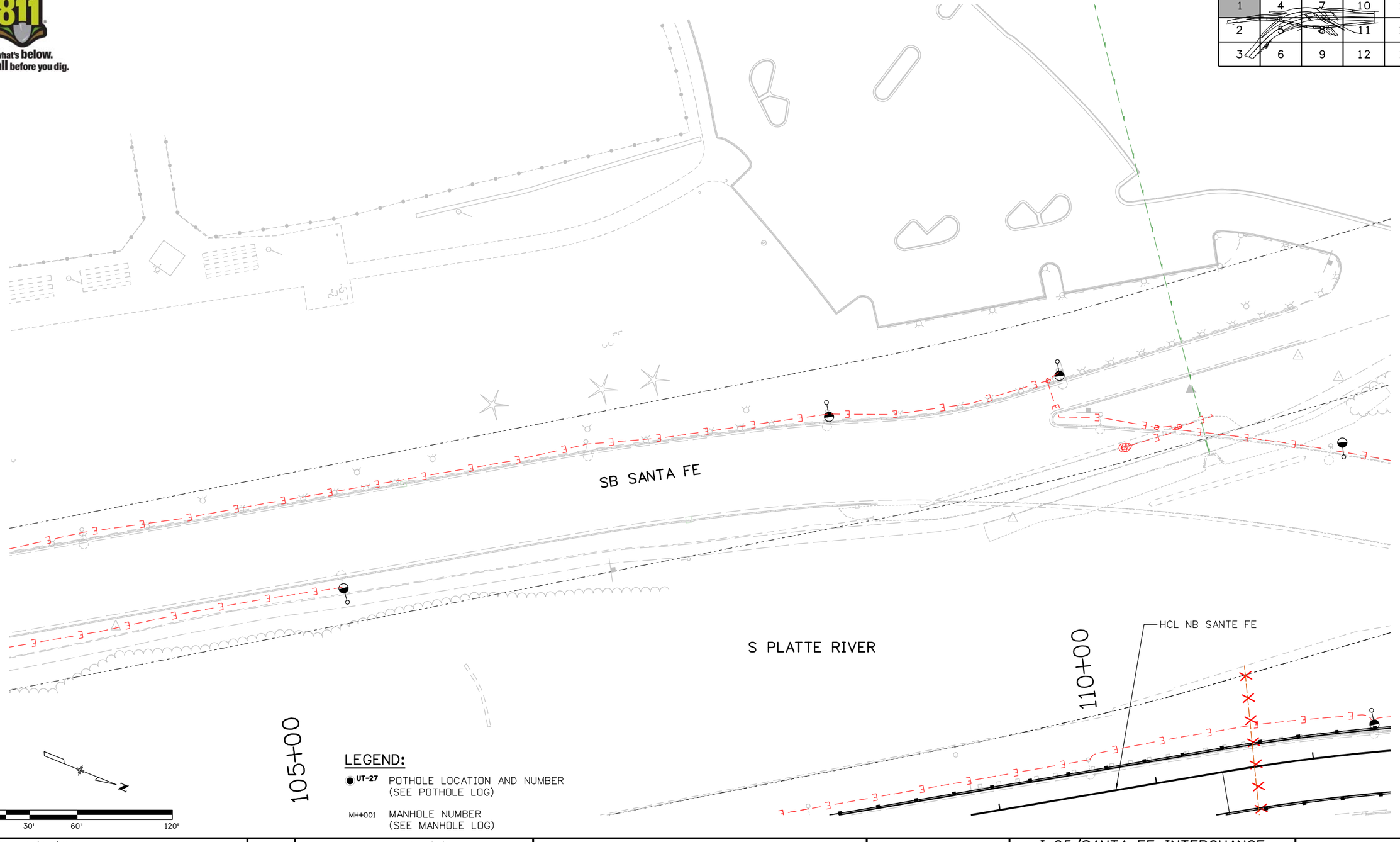

LEGEND:

- UT-27 — POTHOLE LOCATION AND NUMBER (SEE POTHOLE LOG)
- MH+001 — MANHOLE NUMBER (SEE MANHOLE LOG)

Print Date: 9/27/2010	0000	Sheet Revisions	
File Name: 16311HA UTIL_PH2_I25_Plan01.dgn		Date: / Comments / Init.	
Horiz. Scale: 1:60.0003 Vert. Scale: As Noted			
Unit Information Unit Leader Initials			
FELSBURG HOLT & ULLEVIG 6300 South Syracuse Way Centennial, CO 80111			

Colorado Department of Transportation
DEPARTMENT OF TRANSPORTATION
2000 South Holly Street
Denver, CO 80222
Phone: 303-972-9112 FAX: 303-972-9114
Region 6 RLB

As Constructed
No Revisions:
Revised:
Void:

I-25/SANTA FE INTERCHANGE
STAGE 1.2/1.3 - UTILITY PLAN

Designer: M. HARTWIG
Detailer: D. DYER
Sheet Subset: UTILITY
Structure Numbers:
Subset Sheets: 1 of 15

Project No./Code
IM 0254-394
16311
Sheet Number 422

ddyer 3:00:28 PM P:\FHU\Santa Fe & I-25\16311\Utilities\Drawings\16311HA UTIL_PH2_I25_Plan01.dgn
9/27/2010 CDOT-DefaultPrinter_XM.pltcfg

Know what's below. Call before you dig.

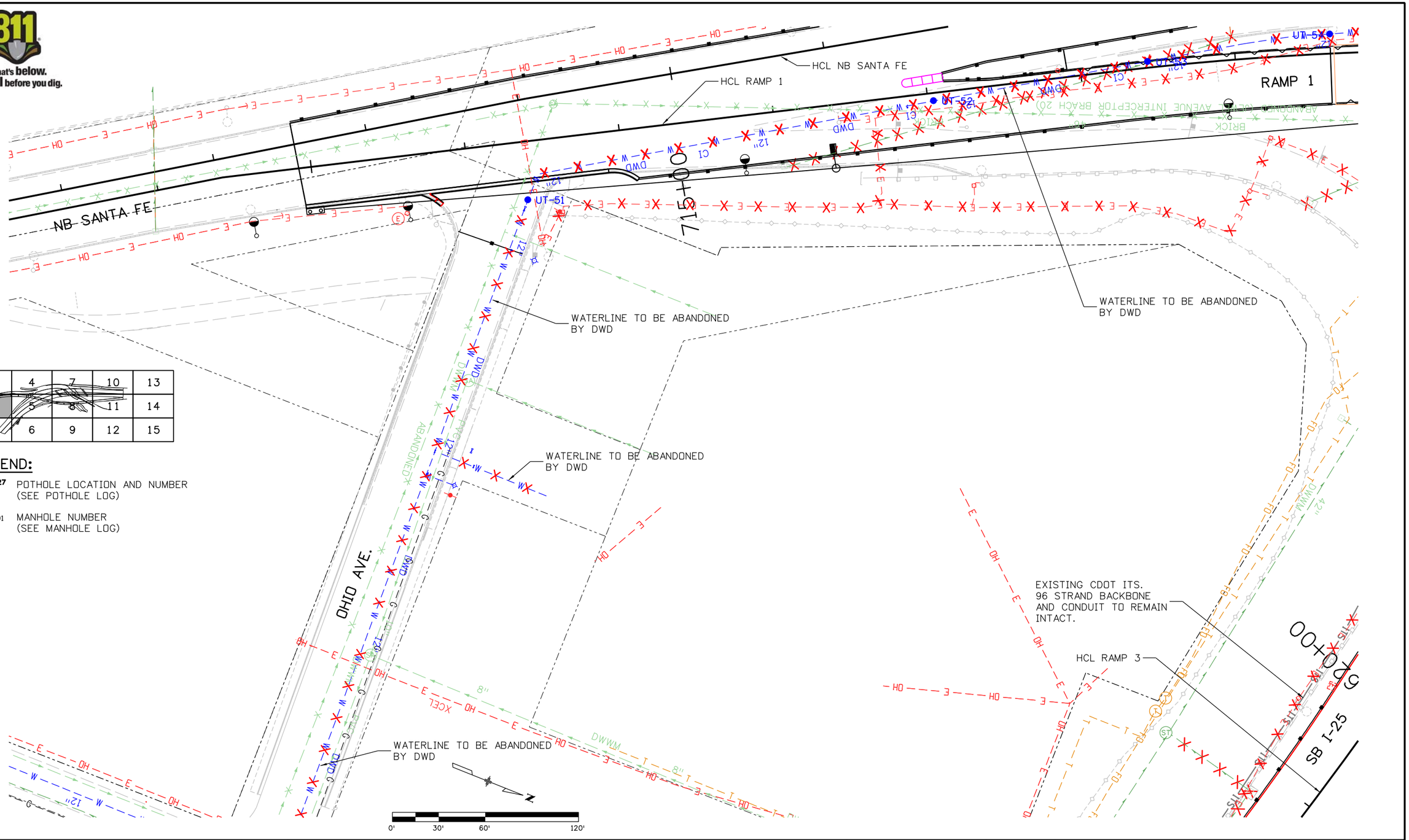

1	4	7	10	13
2	5	8	11	14
3	6	9	12	15

LEGEND:

- ● UT-27 — POTHOLE LOCATION AND NUMBER (SEE POTHOLE LOG)
- MH-001 — MANHOLE NUMBER (SEE MANHOLE LOG)

Print Date: 9/27/2010		Sheet Revisions			Colorado Department of Transportation
File Name: 16311HA UTIL_PH2_I25_Plan02.dgn		Date:	Comments	Init.	2000 South Holly Street
Horiz. Scale: 1:60	Vert. Scale: As Noted				Denver, CO 80222
Unit Information	Unit Leader Initials				Phone: 303-972-9112 FAX: 303-972-9114
FELSBURG HOLT & ULLEVIG 6300 South Syracuse Way Centennial, CO 80111					Region 6 RLB

As Constructed	I-25/SANTA FE INTERCHANGE STAGE 1.2/1.3 - UTILITY PLAN			Project No./Code
No Revisions:				IM 0254-394
Revised:	Designer: M. HARTWIG	Structure Numbers		16311
Void:	Detailer: D. DYER			Sheet Number 423
	Sheet Subset: UTILITY	Subset Sheets: 2 of 15		

ddyer 3:11:35 PM P:\FHU\Santa Fe & I-25\16311\Utilities\Drawings\16311HA UTIL_PH2_I25_Plan02.dgn
9/27/2010 CDOT-DefaultPrinter_XM.pltcfg

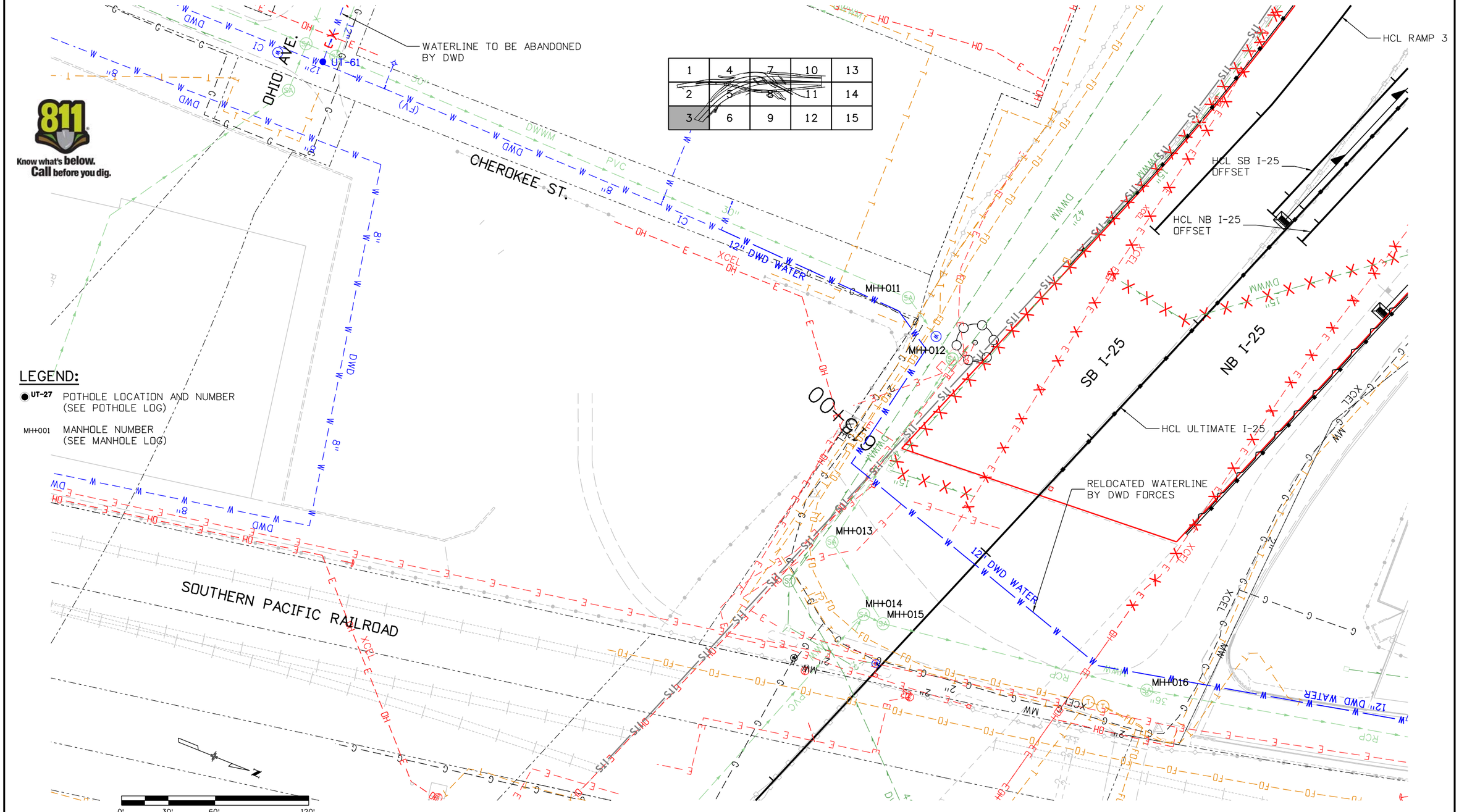

1	4	7	10	13
2	5	8	11	14
3	6	9	12	15

Know what's below. Call before you dig.

Print Date: 9/27/2010	
File Name: 16311HA UTIL_PH2_I25_Plan03.dgn	
Horiz. Scale: 1:60	Vert. Scale: As Noted
Unit Information	Unit Leader Initials

FELSBURG HOLT & ULLEVIG 6300 South Syracuse Way Centennial, CO 80111

Sheet Revisions

Date:	Comments	Init.

Colorado Department of Transportation
DEPARTMENT OF TRANSPORTATION
2000 South Holly Street
Denver, CO 80222
Phone: 303-972-9112 FAX: 303-972-9114
Region 6 RLB

As Constructed
No Revisions:
Revised:
Void:

I-25/SANTA FE INTERCHANGE
STAGE 1.2/1.3 - UTILITY PLAN

Designer:	M. HARTWIG	Structure Numbers	
Detailer:	D. DYER		
Sheet Subset:	UTILITY	Subset Sheets:	3 of 15

Project No./Code
IM 0254-394
16311
Sheet Number 424

dayer 3:14:35 PM P:\FHU\Santa Fe & I-25\16311\Utilities\Drawings\16311HA UTIL_PH2_125_Plan03.dgn
9/27/2010 CDOT-DefaultPrinter_XM.pltcfg

Know what's **below.**
Call before you dig.

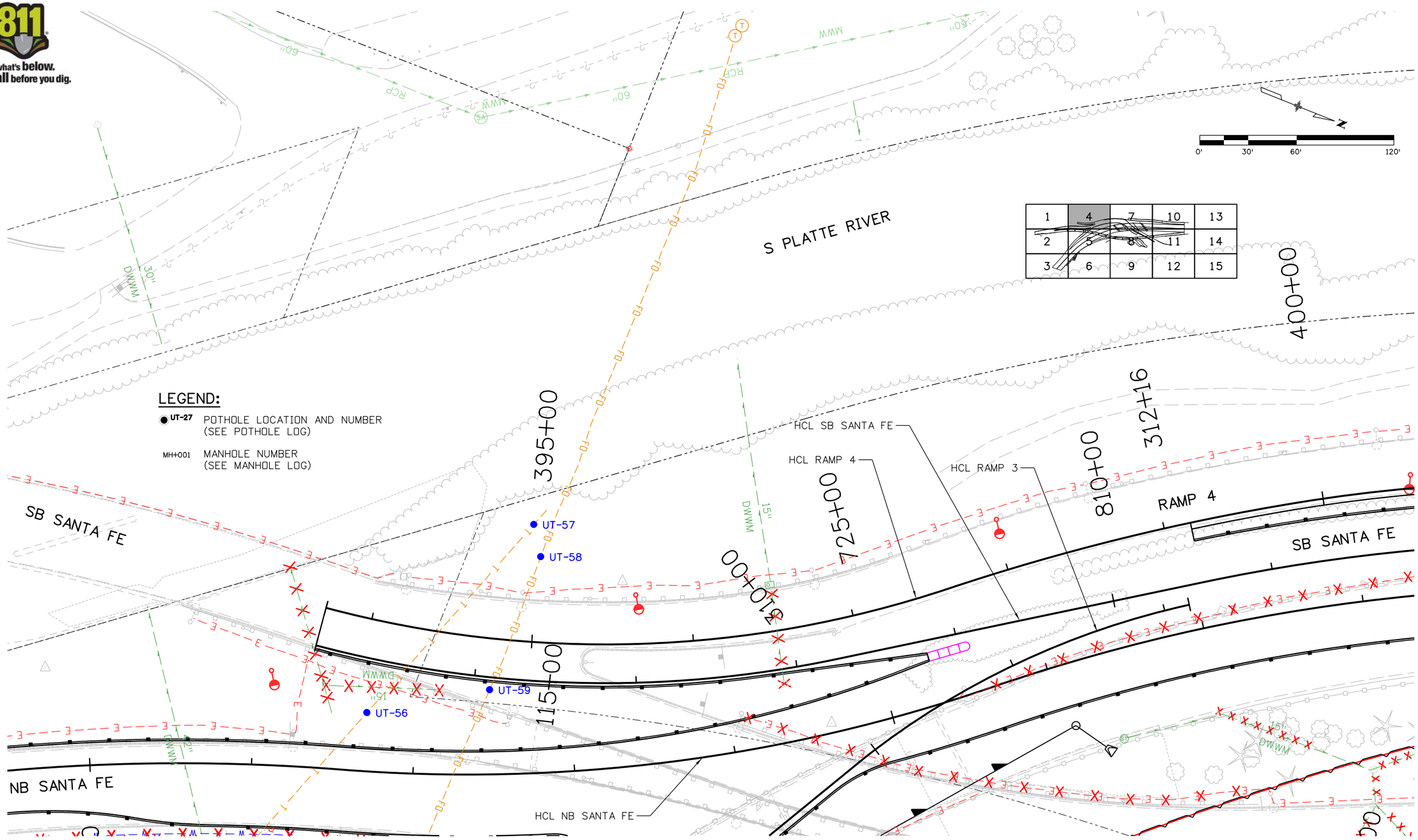

LEGEND:

- ● UT-27 — POTHOLE LOCATION AND NUMBER (SEE POTHOLE LOG)
- MH+001 — MANHOLE NUMBER (SEE MANHOLE LOG)

Print Date: 9/27/2010		Sheet Revisions	
File Name: 16311HA UTIL_PH2_I25_Plan04.dgn		Date:	Comments / Init.
Horiz. Scale: 1:60 Vert. Scale: As Noted			
Unit Information Unit Leader Initials			
FELSBURG HOLT & ULLEVIG 6300 South Syracuse Way Centennial, CO 80111	00000		

Colorado Department of Transportation
DEPARTMENT OF TRANSPORTATION
2000 South Holly Street
Denver, CO 80222
Phone: 303-972-9112 FAX: 303-972-9114
Region 6 RLB

As Constructed
No Revisions:
Revised:
Void:

I-25/SANTA FE INTERCHANGE
STAGE 1.2/1.3 - UTILITY PLAN

Designer:	M. HARTWIG	Structure Numbers	
Detailer:	D. DYER		
Sheet Subset:	UTILITY	Subset Sheets:	4 of 15

Project No./Code
IM 0254-394
16311
Sheet Number 425

ddyer 3:30:18 PM P:\FHU\Santa Fe & I-25\16311\Utilities\Drawings\16311HA UTIL_PH2_I25_Plan04.dgn
9/27/2010 CDOT-DefaultPrinter_XM.pltcfg

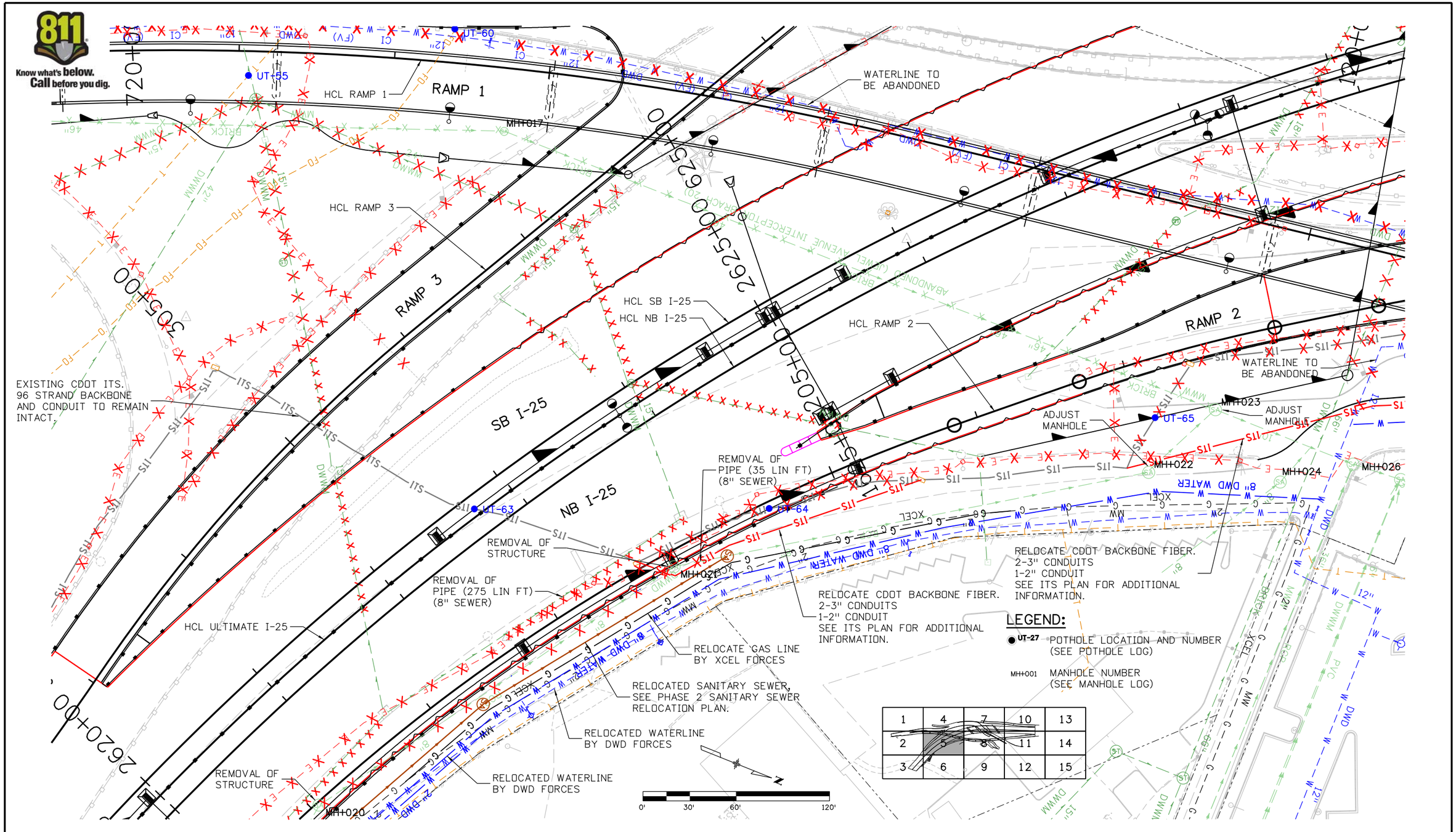

Print Date: 9/27/2010		Sheet Revisions			
File Name: 16311HA UTIL_PH2_I25_Plan05.dgn		Date:	Comments	Init.	
Horiz. Scale: 1:60	Vert. Scale: As Noted				
Unit Information	Unit Leader Initials				
FELSBURG HOLT & ULLEVIG 6300 South Syracuse Way Centennial, CO 80111					

Colorado Department of Transportation
2000 South Holly Street
Denver, CO 80222
Phone: 303-972-9112 FAX: 303-972-9114
Region 6 RLB

As Constructed
No Revisions:
Revised:
Void:

I-25/SANTA FE INTERCHANGE
STAGE 1.2/1.3 - UTILITY PLAN

Designer: M. HARTWIG
Detailer: D. DYER
Sheet Subset: UTILITY
Structure Numbers
Subset Sheets: 5 of 15

Project No./Code
IM 0254-394
16311
Sheet Number 426

ddyer 3:35:11 PM P:\FHU\Santa Fe & I-25\16311\Utilities\Drawings\16311HA UTIL_PH2_I25_Plan05.dgn
9/27/2010 CDOT-DefaultPrinter_XM.pltcfg

RELOCATED WATERLINE BY DWD FORCES

RELOCATED SANITARY SEWER, SEE STAGE 1.2/1.3 - SANITARY SEWER RELOCATION PLAN

REMOVAL OF PIPE (65 LIN. FT.)(8" SEWER)

RELOCATED WATERLINE BY DWD FORCES

NB I-25

MH-019

MH-018

CHEROKEE ST.

1	4	7	10	13
2	5	8	11	14
3	6	9	12	15

LEGEND:

- UT-27 POTHOLE LOCATION AND NUMBER (SEE POTHOLE LOG)
- MH-001 MANHOLE NUMBER (SEE MANHOLE LOG)

0' 30' 60' 120'

Know what's below. Call before you dig.

Print Date: 9/27/2010	Sheet Revisions		
File Name: 16311HA UTIL_PH2_I25_Plan06.dgn	Date:	Comments	Init.
Horiz. Scale: 1:60 Vert. Scale: As Noted			
Unit Information Unit Leader Initials			
FELSBURG HOLT & ULLEVIG 6300 South Syracuse Way Centennial, CO 80111			

Colorado Department of Transportation
DEPARTMENT OF TRANSPORTATION
2000 South Holly Street
Denver, CO 80222
Phone: 303-972-9112 FAX: 303-972-9114
Region 6 RLB

As Constructed
No Revisions:
Revised:
Void:

I-25/SANTA FE INTERCHANGE
STAGE 1.2/1.3 - UTILITY PLAN

Designer:	M. HARTWIG	Structure Numbers	
Detailer:	D. DYER		
Sheet Subset:	UTILITY	Subset Sheets:	6 of 15

Project No./Code
IM 0254-394
16311
Sheet Number 427

ddyer 3:41:13 PM P:\FHU\Santa Fe & I-25\16311\Utilities\Drawings\16311HA UTIL_PH2_I25_Plan06.dgn
9/27/2010 CDOT-DefaultPrinter_XM.pltcfg

Know what's below. Call before you dig.

LEGEND:

- ● UT-27 — POTHOLE LOCATION AND NUMBER (SEE POTHOLE LOG)
- MH+001 — MANHOLE NUMBER (SEE MANHOLE LOG)

0' 30' 60' 120'

1	4	7	10	13
2	5	8	11	14
3	6	9	12	15

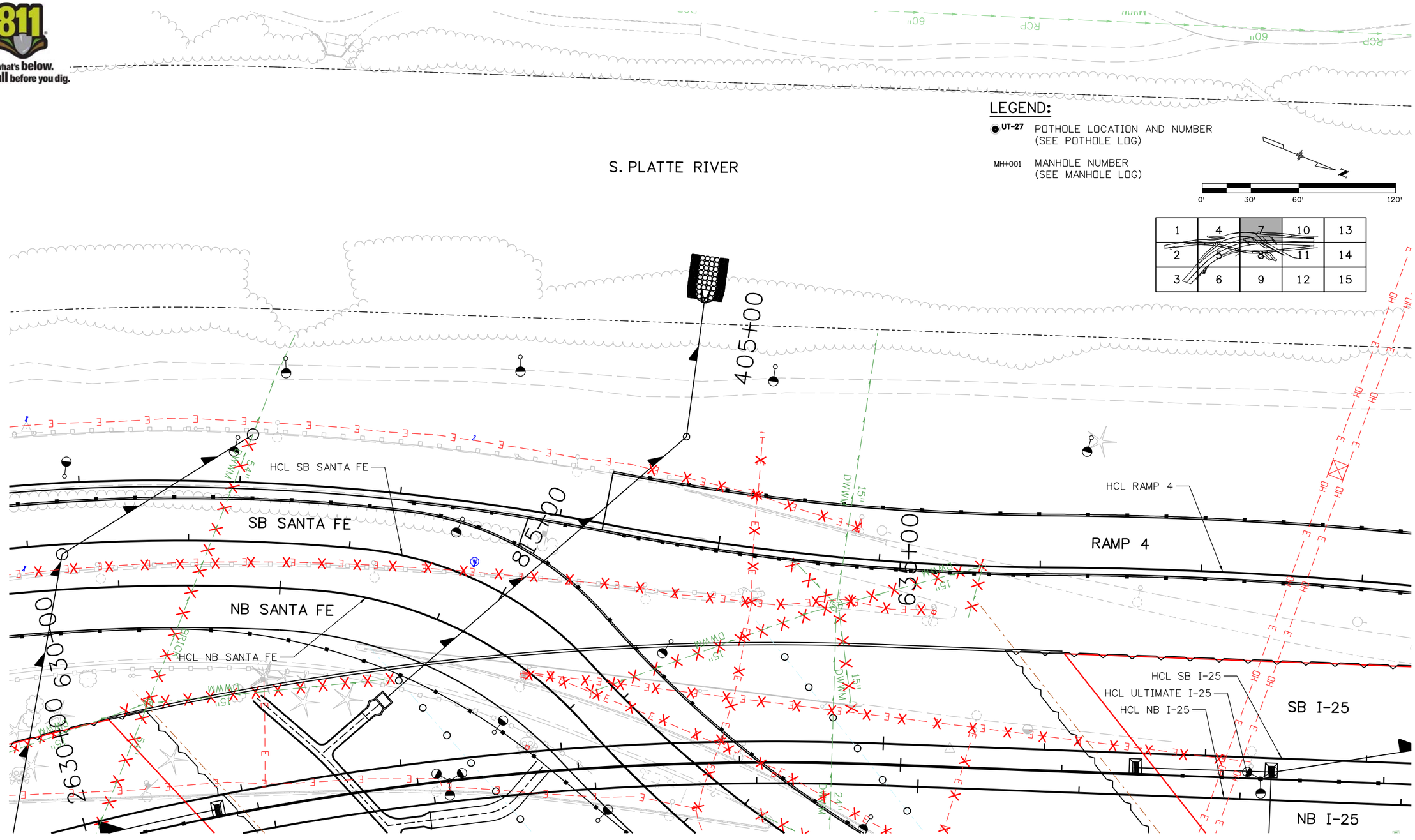

Print Date: 9/27/2010		Sheet Revisions		
File Name: 16311HA UTIL_PH2_I25_Plan07.dgn		Date:	Comments	Init.
Horiz. Scale: 1:60 Vert. Scale: As Noted				
Unit Information Unit Leader Initials				
FELSBURG HOLT & ULLEVIG 6300 South Syracuse Way Centennial, CO 80111				

Colorado Department of Transportation
DEPARTMENT OF TRANSPORTATION
2000 South Holly Street
Denver, CO 80222
Phone: 303-972-9112 FAX: 303-972-9114
Region 6 RLB

As Constructed
No Revisions:
Revised:
Void:

I-25/SANTA FE INTERCHANGE
STAGE 1.2/1.3 - UTILITY PLAN

Designer: M. HARTWIG
Detailer: D. DYER
Sheet Subset: UTILITY
Structure Numbers:
Subset Sheets: 7 of 15

Project No./Code
IM 0254-394
16311
Sheet Number 428

ddyer 3:44:31 PM P:\FHU\Santa Fe & I-25\16311\Utilities\Drawings\16311HA UTIL_PH2_I25_Plan07.dgn
9/27/2010 CDOT-DefaultPrinter_XM.pltcfg

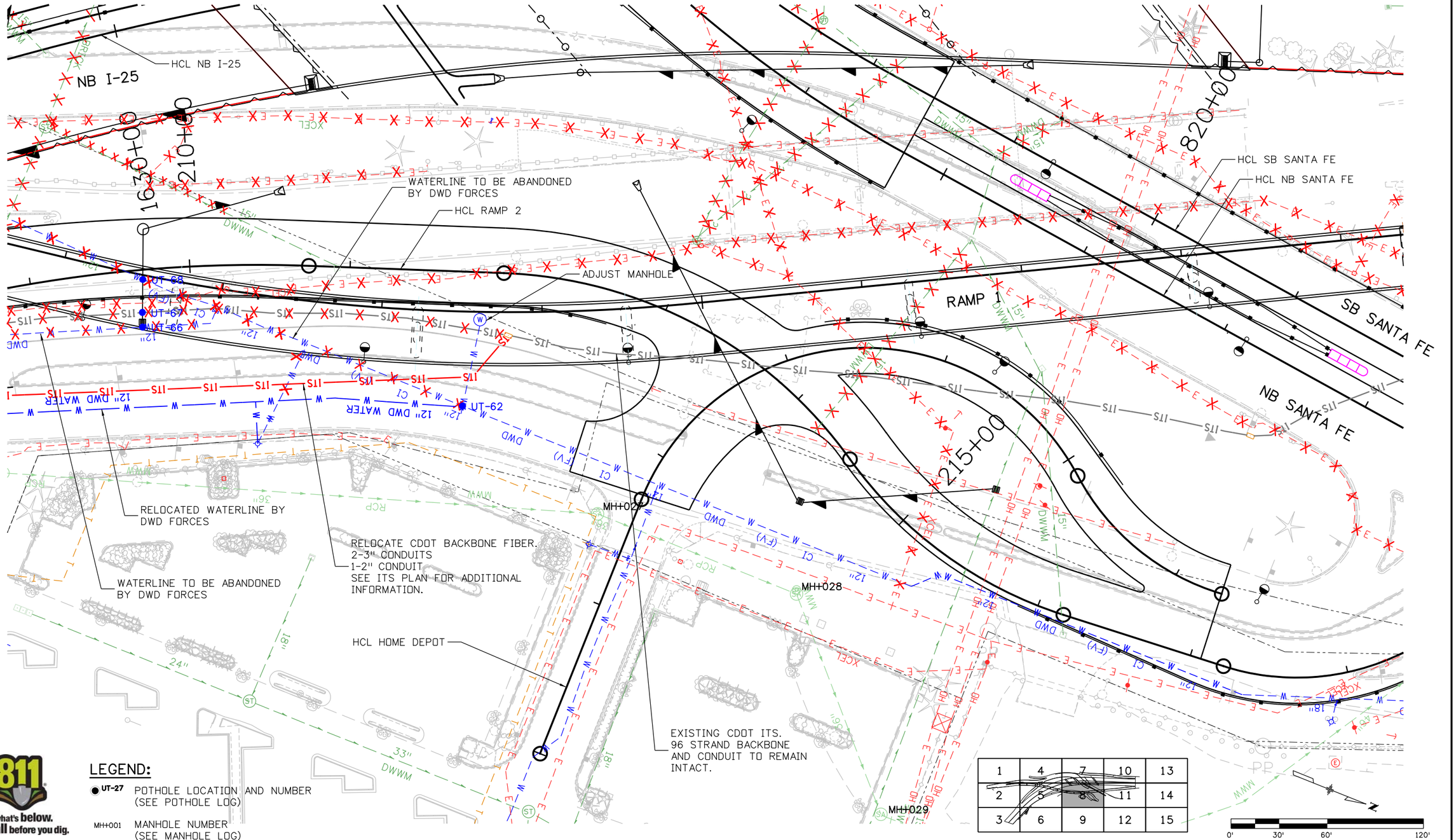

1	4	7	10	13
2	5	8	11	14
3	6	9	12	15

Print Date: 9/27/2010	Sheet Revisions		
File Name: 16311HA UTIL_PH2_I25_Plan08.dgn	Date:	Comments	Init.
Horiz. Scale: 1:60 Vert. Scale: As Noted			
Unit Information Unit Leader Initials			
FELSBURG HOLT & ULLEVIG 6300 South Syracuse Way Centennial, CO 80111			

Colorado Department of Transportation
DEPARTMENT OF TRANSPORTATION
2000 South Holly Street
Denver, CO 80222
Phone: 303-972-9112 FAX: 303-972-9114
Region 6 RLB

As Constructed	
No Revisions:	
Revised:	
Void:	

I-25/SANTA FE INTERCHANGE
STAGE 1.2/1.3 - UTILITY PLAN

Designer:	M. HARTWIG	Structure Numbers	
Detailer:	D. DYER		
Sheet Subset:	UTILITY	Subset Sheets:	8 of 15

Project No./Code	
IM 0254-394	
16311	
Sheet Number	429

ddyer 3:48:42 PM P:\FHU\Santa Fe & I-25\16311\Utilities\Drawings\16311HA UTIL_PH2_I25_Plan08.dgn
9/27/2010 CDOT-DefaultPrinter_XM.pltcfg

Know what's below. Call before you dig.

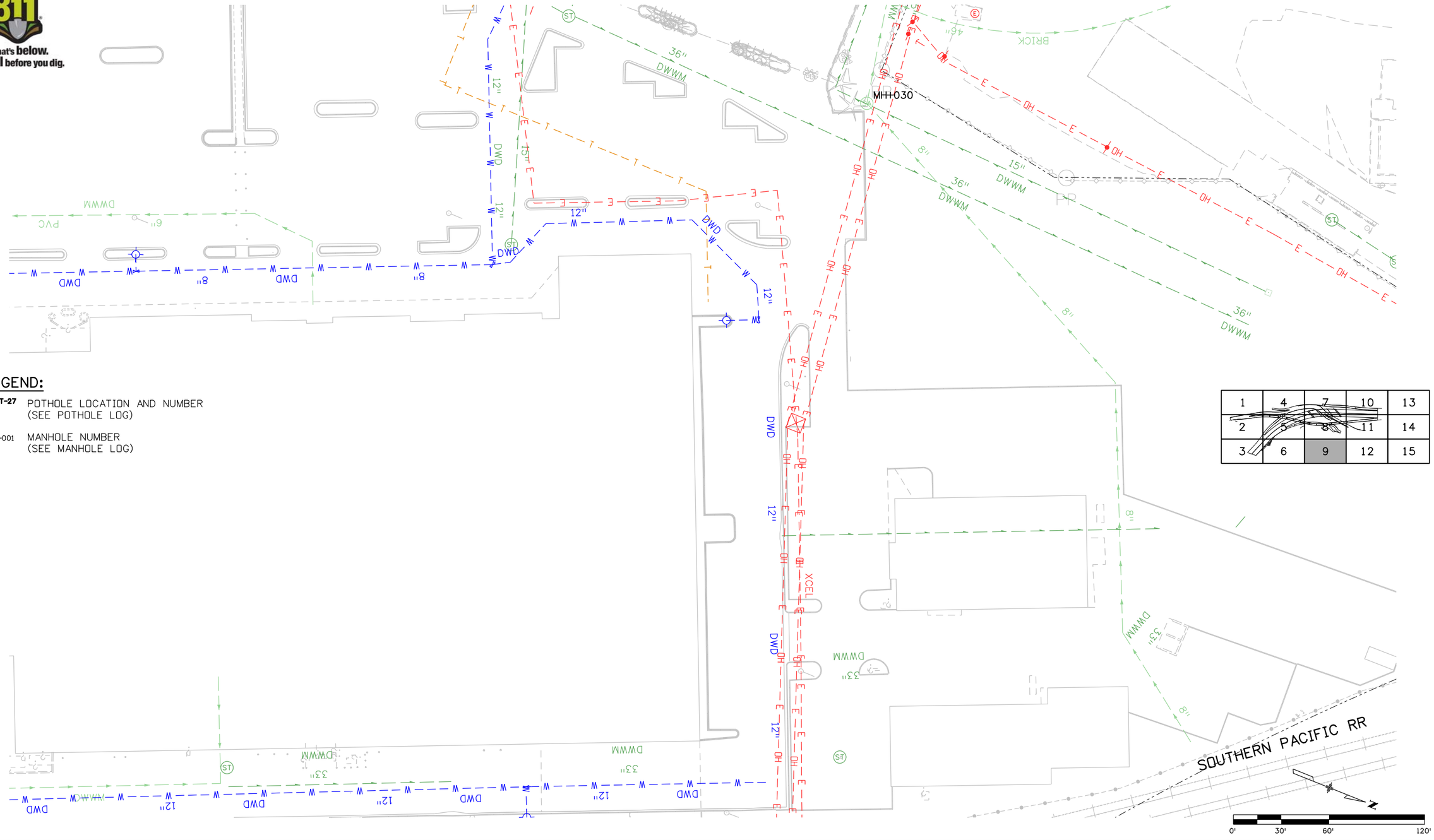

LEGEND:

- ● UT-27 — POTHOLE LOCATION AND NUMBER (SEE POTHOLE LOG)
- MH-001 — MANHOLE NUMBER (SEE MANHOLE LOG)

1	4	7	10	13
2	5	8	11	14
3	6	9	12	15

Print Date: 9/27/2010	Sheet Revisions		
File Name: 16311HA UTIL_PH2_I25_Plan09.dgn	Date:	Comments	Init.
Horiz. Scale: 1:60 Vert. Scale: As Noted			
Unit Information Unit Leader Initials			
FELSBURG HOLT & ULLEVIG 6300 South Syracuse Way Centennial, CO 80111			

Colorado Department of Transportation
DEPARTMENT OF TRANSPORTATION
2000 South Holly Street
Denver, CO 80222
Phone: 303-972-9112 FAX: 303-972-9114
Region 6 RLB

As Constructed
No Revisions:
Revised:
Void:

I-25/SANTA FE INTERCHANGE
STAGE 1.2/1.3 - UTILITY PLAN

Designer:	M. HARTWIG	Structure Numbers	
Detailer:	D. DYER		
Sheet Subset:	UTILITY	Subset Sheets:	9 of 15

Project No./Code
IM 0254-394
16311
Sheet Number 430

dayer 3:50:27 PM P:\FHU\Santa Fe & I-25\16311\Utilities\Drawings\16311HA UTIL_PH2_I25_Plan09.dgn
9/27/2010 CDOT-DefaultPrinter_XM.pltcfg

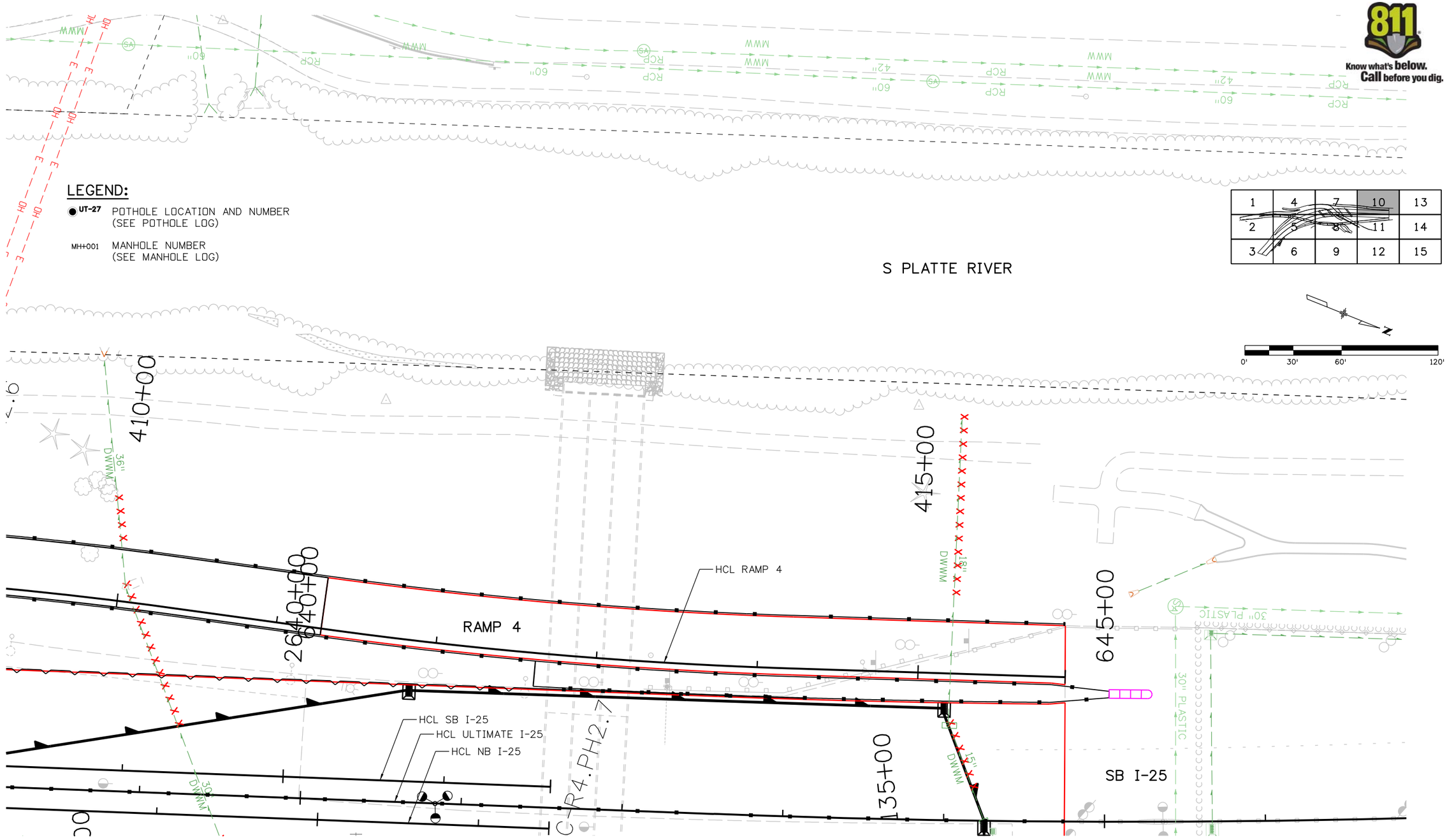

1	4	7	10	13
2	5	8	11	14
3	6	9	12	15

Print Date: 9/27/2010
File Name: 16311HA UTIL_PH2_I25_Plan10.dgn
Horiz. Scale: 1:60 Vert. Scale: As Noted
Unit Information Unit Leader Initials

FELSBURG HOLT & ULLEVIG 6300 South Syracuse Way Centennial, CO 80111

Sheet Revisions		
Date:	Comments	Init.

Colorado Department of Transportation
2000 South Holly Street
Denver, CO 80222
Phone: 303-972-9112 FAX: 303-972-9114
Region 6 RLB

As Constructed
No Revisions:
Revised:
Void:

I-25/SANTA FE INTERCHANGE
STAGE 1.2/1.3 - UTILITY PLAN

Designer: M. HARTWIG
Detailer: D. DYER
Sheet Subset: UTILITY
Structure Numbers
Subset Sheets: 10 of 15

Project No./Code
IM 0254-394
16311
Sheet Number 431

ddyer 3:51:57 PM P:\FHU\Santa Fe & I-25\16311\Utilities\Drawings\16311HA UTIL_PH2_I25_Plan10.dgn
9/27/2010 CDOT-DefaultPrinter_XM.pltcfg

Know what's below. Call before you dig.

LEGEND:

- UT-27 — POTHOLE LOCATION AND NUMBER (SEE POTHOLE LOG)
- MH-001 — MANHOLE NUMBER (SEE MANHOLE LOG)

1	4	7	10	13
2	5	8		14
3	6	9	12	15

130+00

164+00

NB I-25

EXISTING CDOT FIBER/CONDUIT TO REMAIN INTACT

HCL RAMP 1

ADJUST MANHOLE

30" PLASTIC

38"x24" HERCP DWWM

24" DWWM

ADJUST MANHOLE

EXISTING CDOT FIBER/CONDUIT TO REMAIN INTACT

UT-70

UT-69

HCL RAMP 2

HCL SB SANTA FE

HCL NB SANTA FE

SB SANTA FE

NB SANTA FE

MH1031

MH1032

200+00

0' 30' 60' 120'

Print Date: 9/27/2010	Sheet Revisions			Colorado Department of Transportation	As Constructed
File Name: 16311HA UTIL_PH2_I25_Plan11.dgn	Date:	Comments	Init.	2000 South Holly Street Denver, CO 80222 Phone: 303-972-9112 FAX: 303-972-9114	No Revisions:
Horiz. Scale: 1:60 Vert. Scale: As Noted				Region 6 RLB	Revised:
Unit Information Unit Leader Initials					Void:
FELSBURG HOLT & ULLEVIG 6300 South Syracuse Way Centennial, CO 80111					

I-25/SANTA FE INTERCHANGE
STAGE 1.2/1.3 - UTILITY PLAN

Designer:	M. HARTWIG	Structure Numbers	
Detailer:	D. DYER		
Sheet Subset:	UTILITY	Subset Sheets:	11 of 15

Project No./Code: IM 0254-394

16311

Sheet Number 432

ddyer 4:07:26 PM P:\FHU\Santa Fe & I-25\16311\Utilities\Drawings\16311HA UTIL_PH2_I25_Plan11.dgn
9/27/2010 CDOT-DefaultPrinter_XM.pltcfg

Know what's below. Call before you dig.

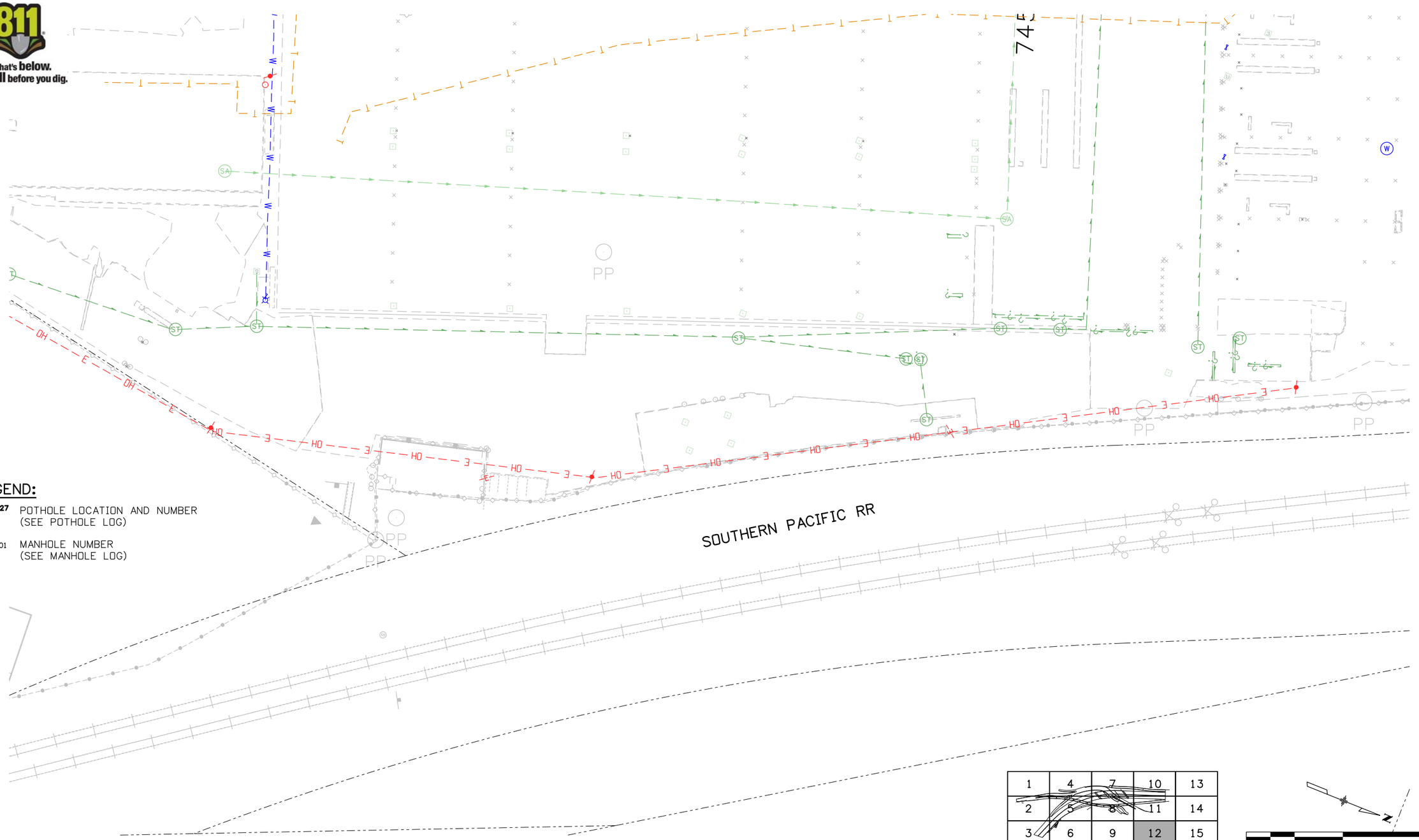

LEGEND:

- ● UT-27 POTHOLE LOCATION AND NUMBER (SEE POTHOLE LOG)
- MH-001 MANHOLE NUMBER (SEE MANHOLE LOG)

1	4	7	10	13
2	5	8	11	14
3	6	9	12	15

0' 30' 60' 120'

Print Date: 9/27/2010
File Name: 16311HA UTIL_PH2_I25_Plan12.dgn
Horiz. Scale: 1:60 Vert. Scale: As Noted
Unit Information Unit Leader Initials

FELSBURG HOLT & ULLEVIG 6300 South Syracuse Way Centennial, CO 80111

Sheet Revisions		
Date:	Comments	Init.

Colorado Department of Transportation
DEPARTMENT OF TRANSPORTATION
2000 South Holly Street
Denver, CO 80222
Phone: 303-972-9112 FAX: 303-972-9114
Region 6 RLB

As Constructed
No Revisions:
Revised:
Void:

I-25/SANTA FE INTERCHANGE
STAGE 1.2/1.3 - UTILITY PLAN

Designer: M. HARTWIG
Detailer: D. DYER
Sheet Subset: UTILITY
Structure Numbers
Subset Sheets: 12 of 15

Project No./Code
IM 0254-394
16311
Sheet Number 433

ddyer 4:03:11 PM P:\FHU\Santa Fe & I-25\16311\Utilities\Drawings\16311HA UTIL_PH2_I25_Plan12.dgn
9/27/2010 CDOT-DefaultPrinter_XM.pltcfg

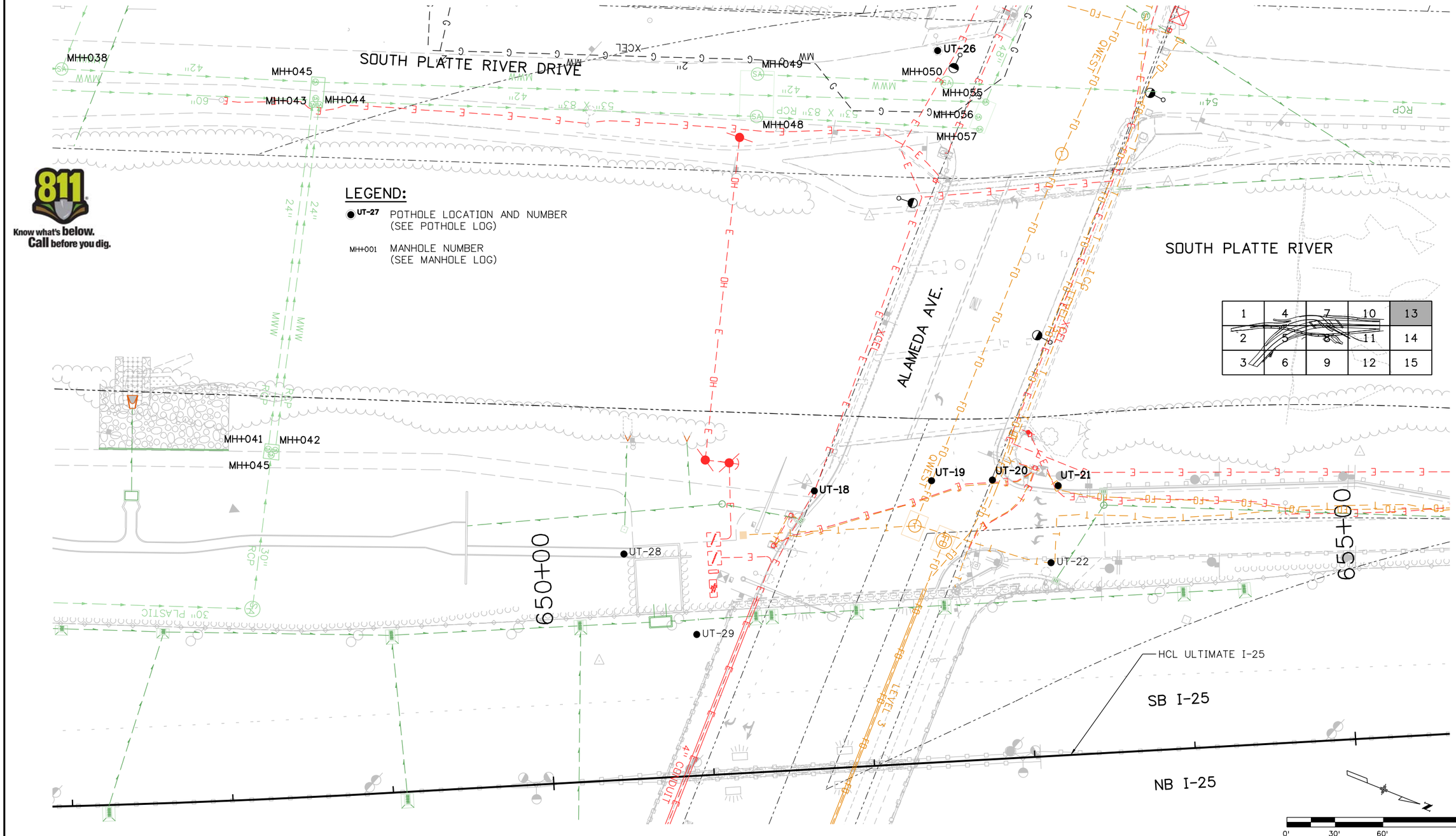

1	4	7	10	13
2	5	8	11	14
3	6	9	12	15

Print Date: 9/27/2010	Sheet Revisions	Colorado Department of Transportation	As Constructed
File Name: 16311HA UTIL_PH2_I25_Plan13.dgn	Date: Comments: Init.	2000 South Holly Street, Denver, CO 80222	No Revisions:
Horiz. Scale: 1:60 Vert. Scale: As Noted		Phone: 303-972-9112 FAX: 303-972-9114	Revised:
Unit Information Unit Leader Initials		Region 6 RLB	Void:
FELSBURG HOLT & ULLEVIG 6300 South Syracuse Way Centennial, CO 80111			

I-25/SANTA FE INTERCHANGE STAGE 1.2/1.3 - UTILITY PLAN		Project No./Code
Designer: M. HARTWIG	Structure Numbers	IM 0254-394
Detailer: D. DYER		16311
Sheet Subset: UTILITY	Subset Sheets: 13 of 15	Sheet Number 434

dyer 2:57:57 PM P:\FHU\Santa Fe & I-25\16311\Utilities\Drawings\16311HA UTIL_PH2_I25_Plan13.dgn
9/27/2010 CDOT-DefaultPrinter_XM.pltcfg

Know what's below. Call before you dig.

LEGEND:

- ● UT-27 — POTHOLE LOCATION AND NUMBER (SEE POTHOLE LOG)
- MH#001 — MANHOLE NUMBER (SEE MANHOLE LOG)

0' 30' 60' 120'

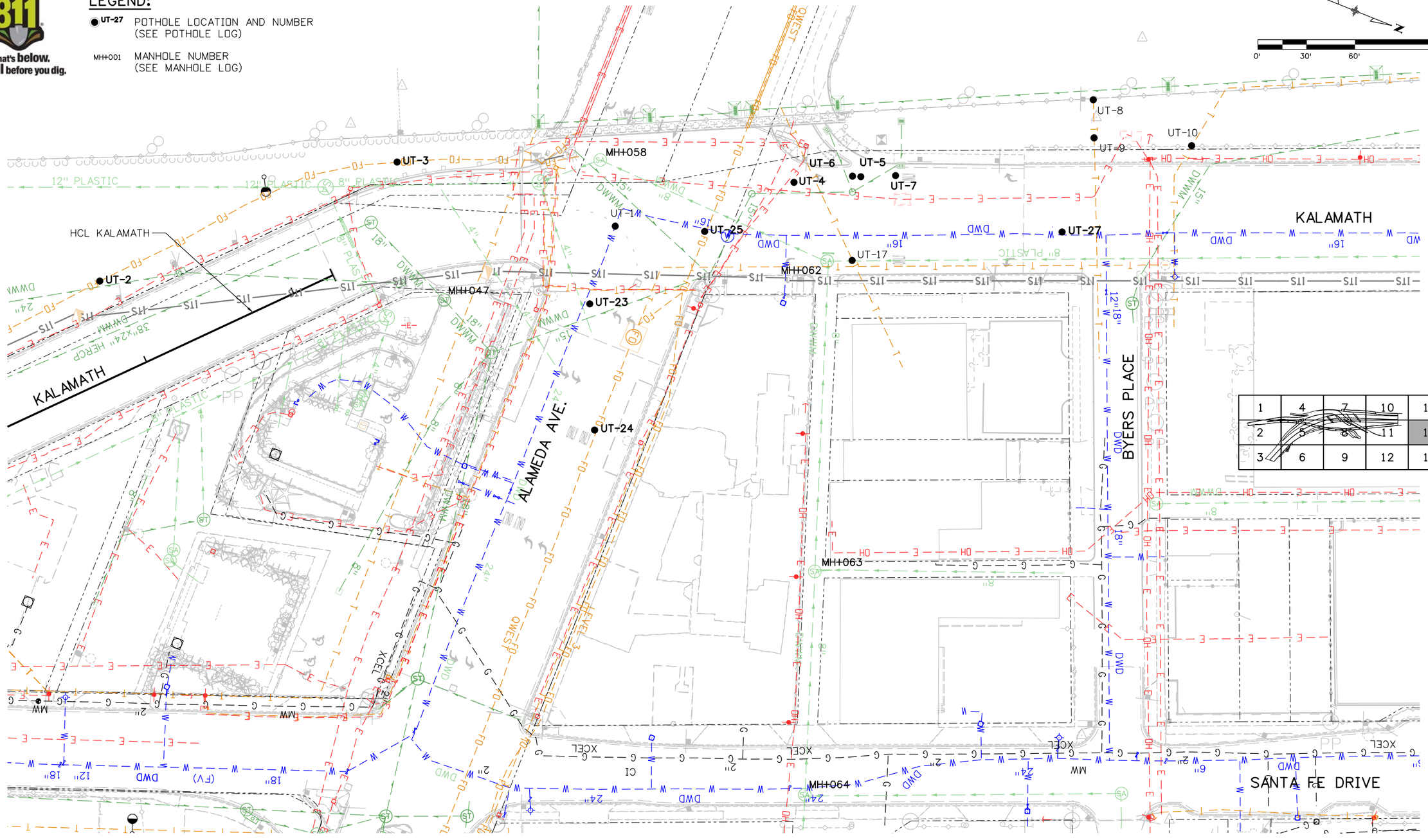

1	4	7	10	13
2	5	8	11	14
3	6	9	12	15

Print Date: 9/27/2010	
File Name: 16311HA UTIL_PH2_I25_Plan14.dgn	
Horiz. Scale: 1:60	Vert. Scale: As Noted
Unit Information	Unit Leader Initials

FELSBURG HOLT & ULLEVIG 6300 South Syracuse Way Centennial, CO 80111

Sheet Revisions

Date:	Comments	Init.

Colorado Department of Transportation
DEPARTMENT OF TRANSPORTATION
2000 South Holly Street
Denver, CO 80222
Phone: 303-972-9112 FAX: 303-972-9114
Region 6 RLB

As Constructed
No Revisions:
Revised:
Void:

I-25/SANTA FE INTERCHANGE
STAGE 1.2/1.3 - UTILITY PLAN

Designer:	M. HARTWIG	Structure Numbers	
Detailer:	D. DYER		
Sheet Subset:	UTILITY	Subset Sheets:	14 of 15

Project No./Code
IM 0254-394
16311
Sheet Number 435

ddyer 2:53:33 PM P:\FHU\Santa Fe & I-25\16311\Utilities\Drawings\16311HA UTIL_PH2_I25_Plan14.dgn
9/27/2010 CDOT-DefaultPrinter_XM.pltcfg

811 Know what's below. Call before you dig.

ALAMEDA AVE.

SOUTHERN PACIFIC RR

LEGEND:

UT-27 POTHOLE LOCATION AND NUMBER (SEE POTHOLE LOG)

MH-001 MANHOLE NUMBER (SEE MANHOLE LOG)

1	4	7	10	13
2	5	8	11	14
3	6	9	12	15

0' 30' 60' 120'

dayer 2:46:58 PW P:\FHU\Santa Fe & I-25\16311\Utilities\Drawings\16311HA UTIL_PH2_I25_Plan15.dgn
9/27/2010 CDOT-DefaultPrinter_XM.pltcfg

Print Date: 9/27/2010
File Name: 16311HA UTIL_PH2_I25_Plan15.dgn
Horiz. Scale: 1:60 Vert. Scale: As Noted
Unit Information Unit Leader Initials

FELSBURG HOLT & ULLEVIG 6300 South Syracuse Way Centennial, CO 80111

Sheet Revisions

Date:	Comments	Init.

Colorado Department of Transportation
DEPARTMENT OF TRANSPORTATION
2000 South Holly Street
Denver, CO 80222
Phone: 303-972-9112 FAX: 303-972-9114
Region 6 RLB

As Constructed
No Revisions:
Revised:
Void:

I-25/SANTA FE INTERCHANGE
STAGE 1.2/1.3 - UTILITY PLAN

Designer: M. HARTWIG
Detailer: D. DYER
Sheet Subset: UTILITY
Structure Numbers
Subset Sheets: 15 of 15

Project No./Code
IM 0254-394
16311
Sheet Number 436

NOTES:

1. PUBLIC WORKS, WASTEWATER MANAGEMENT DIVISION'S STANDARD DETAILS AND TECHINICAL SPECIFICATIONS FOR SANITARY & STORM SEWERS APPLY TO THIS WORK. PUBLIC WORKS, WASTEWATER MANAGEMENT DIVISION'S STANDARD DETAILS (DRAWINGS), MOST RECENT EDITION, SHALL BE USED AS A MINIMUM. THIS BOOKLET IS AVAILABLE IN A REDUCED SIZE BOOKLET FORM AND IS AVAILABLE AT THE PUBLIC WORKS PERMIT OPERATIONS (PWPO) DURING NORMAL BUSINESS HOURS. THE TECHNICAL SPECIFICATIONS ARE AVAILABLE FROM PW DES. BOTH SETS MUST BE IN POSSESSION OF THE CONTRACTOR AT THE PRE-CONSTRUCTION CONFERENCE AND MUST REMAIN ON THE JOB SITE AT ALL TIMES DURING CONSTRUCTION. THE STANDARD DETAILS CAN BE VIEWED AT THE FOLLOWING WEBSITE ADDRESS: WWW.DENVERGOV.ORG/DES

2. CONTRACTOR SHALL CONFORM TO ALL FEDERAL, STATE AND LOCAL HEALTH AND SAFETY RULES AND REGULATIONS.

3. ONE SET OF THE APPROVED SEWER CONSTRUCTION DRAWINGS MUST BE ON-SITE AT ALL TIMES OF CONSTRUCTION.

4. ALL SEWER PIPES SHALL BE INSTALLED WITH CLASS B BEDDING AS A MINIMUM.

5. ANY MODIFICATION, ADJUSTMENTS, CONSTRUCTION OR RECONSTRUCTION OF PUBLIC WORKS, WASTEWATER DIVISION FACILITIES MUST BE INSPECTED BY A PW DES CONSTRUCTION ENGINEERING INSPECTOR. PLEASE SCHEDULE AN APPOINTMENT AT 303-446-3722 A MINIMUM OF 48 HOURS IN ADVANCE OF THE WORK TO SCHEDULE AN INSPECTOR.

6. PIPE MATERIAL, FITTINGS, TRENCHING, BEDDING, CONNECTIONS, AND SEWER INSTALLATION MUST BE INSPECTED BY A PW DES CONSTRUCTION ENGINEERING INSPECTOR PRIOR TO ANY TRENCH BACKFILL. PLEASE SCHEDULE AN APPOINTMENT WITH TED CHRISTENSEN (303-446-3722) A MINIMUM OF 48 HOURS IN ADVANCE OF THE WORK TO SCHEDULE AN INSPECTOR. MONITORING OF THE PROJECT BY PW DES SHALL BE FOR THE PURPOSE OF ASSURING GENERAL COMPLIANCE WITH THE APPROVED PLANS, STANDARDS, DETAILS, AND SPECIFICATIONS AS WELL AS THE RULES & REGULATIONS. STORM AND SANITARY INSPECTIONS SHALL NOT TAKE THE PLACE OF CONSTRUCTION INSPECTION AND MATERIALS TESTING, WHICH IS THE OWNER'S RESPONSIBILITY.

7. SANITARY SEWER PIPES SHALL BE PVC AND CONFORM TO: ASTM D3034 SDR 35 FOR SIZES 8 INCHES TO 15 INCHES IN DIAMETER (SOLID WALL), ASTM F789 FOR 18 INCHES (SOLID WALL), ASTM F679 FOR SIZES 18 TO 36 INCHES (SOLID WALL), ASTM F949 FOR SIZES 8 TO 36 INCHES (PVC PROFILE WALL), ASTM F794 FOR SIZES 8 TO 48 INCHES (PROFILE WALL), OR ASTM F1803 FOR SIZES 18 TO 60 INCHES (CLOSED PROFILE GRAVITY PIPE).

8. ANY QUESTIONS REGARDING PUBLIC WORKS STORM OR SANITARY FACILITIES THAT ARISE DURING CONSTRUCTION SHOULD BE BROUGHT TO THE ATTENTION OF PW DES CONSTRUCTION ENGINEERING INSPECTION AT (303) 446-3722.

9. BACKFILL IN PUBLIC RIGHT OF WAY MUST MEET THE REQUIREMENTS OF DENVER PUBLIC WORKS DEPARTMENT. A STREET CUT PERMIT AND INSPECTION OF A BACKFILL AND PAVEMENT REPAIR BY PUBLIC WORKS IS REQUIRED FOR ALL WORK IN THE PUBLIC RIGHT OF WAY. THE CONTRACTOR AND/OR DEVELOPER IS ADVISED TO CONTACT CONSTRUCTION ENGINEERING ROW INSPECTION AT 303-446-3469 OR PWPO AT 303-446-3759 TO OBTAIN INFORMATION REGARDING FEES AND PROCEDURES FOR OBTAINING THE REQUIRED PERMIT(S). CONTRACTOR MUST OBTAIN A STREET CUT PERMIT AND NOTIFY THE DISTRICT INSPECTOR AT 303-446-3469, 48-HOURS PRIOR TO START OF JOB. COMPACTION TESTING IS REQUIRED.

10. THE CONTRACTOR PERFORMING WORK ON ANY PUBLIC OR PRIVATE STORM SEWER FACILITY OR APPURTENANCE MUST BE PROPERLY TRADE LICENSED AS A COMPANY AND HAVE A LICENSED PLUMBER OR CERTIFIED JOURNEYMAN DRAINLAYER ON SITE DURING THE WORK.

11. ACCESS MUST BE MAINTAINED FOR ALL SEWER MANHOLES DURING CONSTRUCTION. ANY DESIGN CHANGES TO NEW OR EXISTING PUBLIC STORM OR SANITARY SEWER MUST INCLUDE PERMANENT ACCESS TO PUBLIC STORM AND SANITARY SEWER MANHOLES AND COULD REQUIRE ROLL-OVER CURB, COMMERCIAL DRIVE, REINFORCED CONCRETE SIDEWALK, RITTER RINGS OR CONCRETE PAD. MINIMUM ACCESS TO EACH MANHOLE IS A 20' WIDE LANE FROM THE NEAREST PUBLIC RIGHT OF WAY, CENTERED AT THE MANHOLE INCLUDING A 10' RADIUS AROUND THE MANHOLE AND 22.0' VERTICAL CLEARANCE.

12. THE CONNECTION OF A NEW SANITARY/STORM SEWER TO AN EXISTING MANHOLE MAY REQUIRE MANHOLE RECONSTRUCTION AT THE DISCRETION OF THE PW DES CONSTRUCTION ENGINEERING FIELD INSPECTOR OR THE PW DES CONSTRUCTION ENGINEERING ENGINEER.

13. CHANGES IN THE ELEVATION OF AN EXISTING BRICK MANHOLE MAY REQUIRE THE USE OF A PRE-CAST CONCRETE MANHOLE OR MANHOLE RECONSTRUCTION AT THE DISCRETION OF THE PW DES CONSTRUCTION ENGINEERING FIELD INSPECTOR AND/OR PW DES CONSTRUCTION ENGINEERING ENGINEER.

14. CHANGES IN ELEVATION OR MODIFICATION TO EXISTING INLETS MAY REQUIRE RECONSTRUCTION AT THE DISCRETION OF THE PW DES CONSTRUCTION ENGINEERING INSPECTOR OR DES ENGINEER.

15. THE CONTRACTOR SHALL BE AWARE THAT WHEN DEBRIS IS DROPPED INTO PUBLIC MANHOLES AND OTHER PUBLIC STRUCTURES, THE CONTRACTOR IS TO IMMEDIATELY REMOVE THIS TO ELIMINATE THE POSSIBILITY OF PROPERTY DAMAGE DUE TO THE DEBRIS CAUSING BACKUP INTO PRIVATE PROPERTIES. IF IT IS DETERMINED THAT DEBRIS CAUSED A BACKUP, THE CONTRACTOR SHALL BE HELD RESPONSIBLE FOR DAMAGES.

16. THE CONTRACTOR SHALL MAKE SURE THAT ALL MANHOLES AND OTHER STRUCTURES ARE BUILT TO FINISHED GRADE.

17. STRUCTURE EXCAVATION AND BACKFILL WILL NOT BE MEASURED AND PAID FOR SEPERATELY BUT SHALL BE INCLUDED IN THE 8 INCH PLASTIC PIPE PAY ITEM.

18. STRUCTURE EXCAVATION EXTENDING INTO BEDROCK WILL NOT BE MEASURED AND PAID FOR SEPERATELY BUT SHALL BE INCLUDED IN THE 8 INCH PLASTIC PIPE PAY ITEM.

SEWER ABANDONMENTS:

1. CDOT CONTRACTOR SHALL SUBMIT REQUESTS TO ABANDON THE EXISTING (PUBLIC OR PRIVATE) SEWER LINE, WHICH ARE OR COULD POTENTIALLY BE SERVED BY THE FACILITY TO BE ABANDONED, IN WRITING TO THE DEPARTMENT OF PUBLIC WORKS FOR APPROVAL. THE REQUEST WILL PROVIDE A DETAILED SITE PLAN, ALONG WITH JUSTIFICATION FOR ABANDONMENT. PROOF OF PROPERTY OWNERSHIP MUST ALSO BE SUBMITTED.

   THE DEPARTMENT OF PUBLIC WORKS WILL REVIEW REQUESTS AND DETERMINE IF IT CAN BE GRANTED. IF PERMISSION TO ABANDON CAN BE GIVEN THE DEPARMENT OF PUBLIC WORKS WILL ISSUE A SEWER ABANDONMENT PERMIT. THE OWNER OR HIS AGENT IS THEN RESPONSIBLE TO SCHEDULE AN ON-SITE INSPECTION THROUGH THE DEPARTMENT OF PUBLIC WORKS PERMIT OPERATIONS (PERMIT COUNTER GROUP) AT LEAST 24 HOURS IN ADVANCE OF THE DESIRED INSPECTION TIME. ALL SEWER WORK WILL BE PERFORMED TO MEET WASTEWATER MANAGEMENT DIVISION STANDARDS AND THE CONTRACTOR MUST BE LICENSED TO WORK IN THE PUBLIC RIGHT-OF-WAY.

2. MANHOLES TO BE ABANDONED IN PLACE SHALL HAVE ALL PIPES ENTERING OR EXITING THE STRUCTURE PLUGGED WITH LEAN CONCRETE SO THEY ARE WATERTIGHT. MANHOLE TOPS OR CONE SECTIONS SHALL BE REMOVED TO THE FIRST FULL BARREL DIAMETER SECTION, AND/OR TO A POINT NO LESS THAN 24-INCHES BELOW FINAL GRADE. NO SANDBAGS ARE ALLOWED TO BE USED AS PERMANENT PLUGS. THE STRUCTURE SHALL THEN BE BACKFILLED AND COMPACTED IN ACCORDANCE WITH THE DETAIL AND TECHNICAL SPECIFICATIONS. BACKFILL MATERIAL MAY BE EITHER: SELECT BACKFILL, CLEAN SUITABLE EXCAVATED MATERIAL, OR CONTROLLED LOW STRENGTH MATERIAL. MANHOLE RINGS, COVERS, CONE SECTIONS WILL BE REMOVED AND RETURNED TO WASTEWATER MANAGEMENT DIVISION UNLESS THEY HAVE BEEN APPROVED TO BE USED ELSEWHERE FOR SEWER RELOCATION.

3. SEWER LINES TO BE ABANDONED IN PLACE SHALL BE PLUGGED WITH LEAN CONCRETE AND STANDARD MANUFACTURED PLUGS OR CAPS AT BOTH UPSTREAM AND DOWNSTREAM ENDS OF THE ABANDONED SECTION. IF THE MANHOLES ARE ALSO ABANDONED IN PLACE, OR IF THE STRUCTURE IS TO BE REMOVED COMPLETELY, ALL SEWER LINES SHALL BE PLUGGED UPSTREAM AND DOWNSTREAM OF THE REMOVED STRUCTURE FOLLOWING REMOVAL. SEWER LINES TO BE ABANDONED WITH AN INTERNAL DIAMETER OF 24-INCH OR LARGER SHALL BE FILLED WITH SAND, PUMPED GROUT MIXTURES, OR FLOWABLE FILL IN ORDER TO MINIMIZE FUTURE SUBSIDENCE ATTRIBUTABLE TO THE POTENTIAL COLLAPSE OF THE ABANDONED FACILITY. SEWER LINES WITH AN INTERNAL DIAMETER OF 21-INCHES AND SMALLER SHALL BE PLUGGED AT ENTRANCE AND EXIT ENDS WITH APPROVED GROUT MIXTURES OR CONCRETE.

PER THE PROJECT "LAND SURVEY CONTROL DIAGRAM".

1. BASIS OF BEARINGS: A BEARING OF N43°45'07"W BETWEEN COLORADO HIGH ACCURACY REFERENCE NETWORK (HARN) STATIONS "TRANSPORTATION" & "MCDONNEL" WAS UTILIZED AS THE BASIS OF BEARINGS FOR THIS SURVEY. SAID BEARING IS THE PROJECT GRID BEARING BETWEEN SAID STATIONS BASED ON NAD 83/92 MODIFIED COLORADO STATE PLANE COORDINATE SYSTEM (CENTRAL ZONE).

2. BASIS OF ELEVATIONS: NATIONAL GEODETIC SURVEY BENCH MARK "K 394", ELEV = 5242.47' (NAVD '88). ELEVATIONS FOR FOUND POINTS REFLECT GPS OR RECORD VALUES.

3. "BM SURVEY" REFERENCES THE SURVEY CONTROL DIAGRAM FOR CDOT PROJECT NUMBER IM 0252-315, PREPARED BY BENCHMARK SURVEYING.

TABULATION OF STAGE 1.2/1.3 - SANITARY SEWER - DWMD

LINE/ID	STATION AND OFFSET	ALIGNMENT HCL	MANHOLE SLAB BASE (5 FOOT)	MANHOLE SLAB BASE (10 FOOT)	8" PLASTIC PIPE
			EACH	EACH	LIN. FT.
	623+92.50, 113.75' RT.	ULTIMATE I-25	1		
LINE 2					183.63
	621+97.89, 97.65' RT.	ULTIMATE I-25		1	
LINE 3					183.64
	620+03.89, 91.99' RT.	ULTIMATE I-25		1	
		TOTALS:	1	2	367

Print Date: 9/27/2010
File Name: 16311HA UTIL_PH2_Sanitary Sewer Tabs_DWW.dgn
Horiz. Scale: 1:1 Vert. Scale: As Noted
Unit Information Unit Leader Initials

FELSBURG HOLT & ULLEVIG 6300 South Syracuse Way Centennial, CO 80111

Sheet Revisions

Date:	Comments	Init.

Colorado Department of Transportation
DEPARTMENT OF TRANSPORTATION
2000 South Holly Street
Denver, CO 80222
Phone: 303-972-9112 FAX: 303-972-9114
Region 6 RLB

As Constructed
No Revisions:
Revised:
Void:

I-25/SANTA FE INTERCHANGE
GENERAL NOTES AND QUANTITY TABULATIONS DWMD SEWER

Designer: D. DYER
Detailer: D. DYER
Sheet Subset: UTILITY
Structure Numbers:
Subset Sheets: 1 of 1

Project No./Code
IM 0254-394
16311
Sheet Number 437

ddyer 12:57:47 PM P:\FHU\Santa Fe & I-25\16311\Utilities\Drawings\16311HA UTIL_PH2_Sanitary Sewer Tabs_DWW.dgn
9/27/2010 CDOT-DefaultPrinter_XM.pltcfg

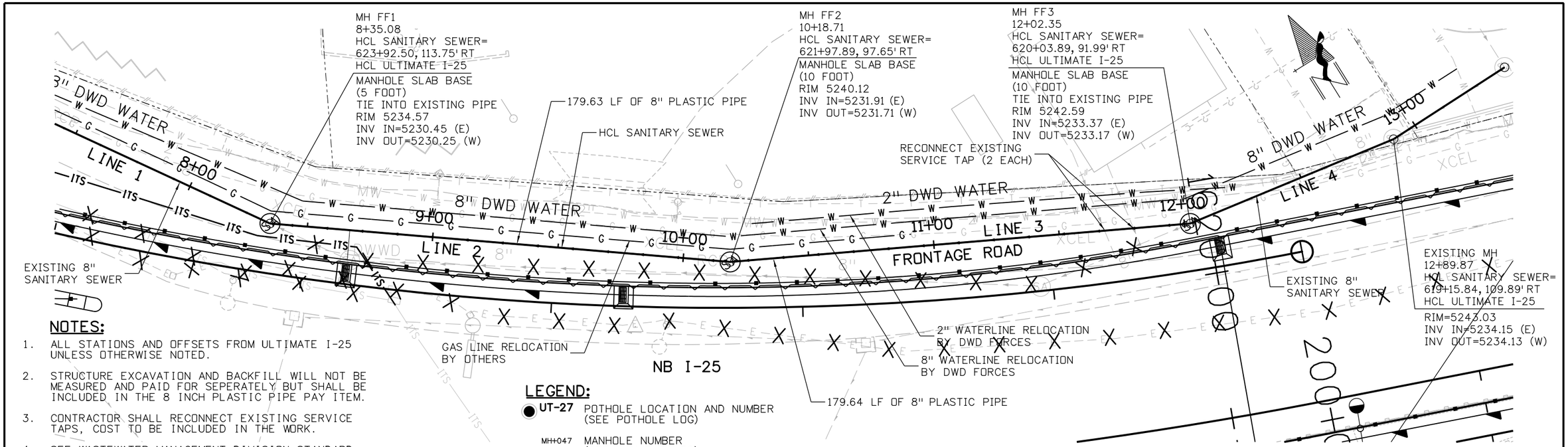

NOTES:

1. ALL STATIONS AND OFFSETS FROM ULTIMATE I-25 UNLESS OTHERWISE NOTED.
2. STRUCTURE EXCAVATION AND BACKFILL WILL NOT BE MEASURED AND PAID FOR SEPERATELY BUT SHALL BE INCLUDED IN THE 8 INCH PLASTIC PIPE PAY ITEM.
3. CONTRACTOR SHALL RECONNECT EXISTING SERVICE TAPS, COST TO BE INCLUDED IN THE WORK.
4. SEE WASTEWATER MANAGEMENT DIVISION STANDARD DETAILS FOR ADDITIONAL INFORMATION.

LEGEND:

- UT-27 — POTHOLE LOCATION AND NUMBER (SEE POTHOLE LOG)
- MH-047 — MANHOLE NUMBER (SEE MANHOLE LOG)
- X — X — REMOVAL OF EXISTING PIPE

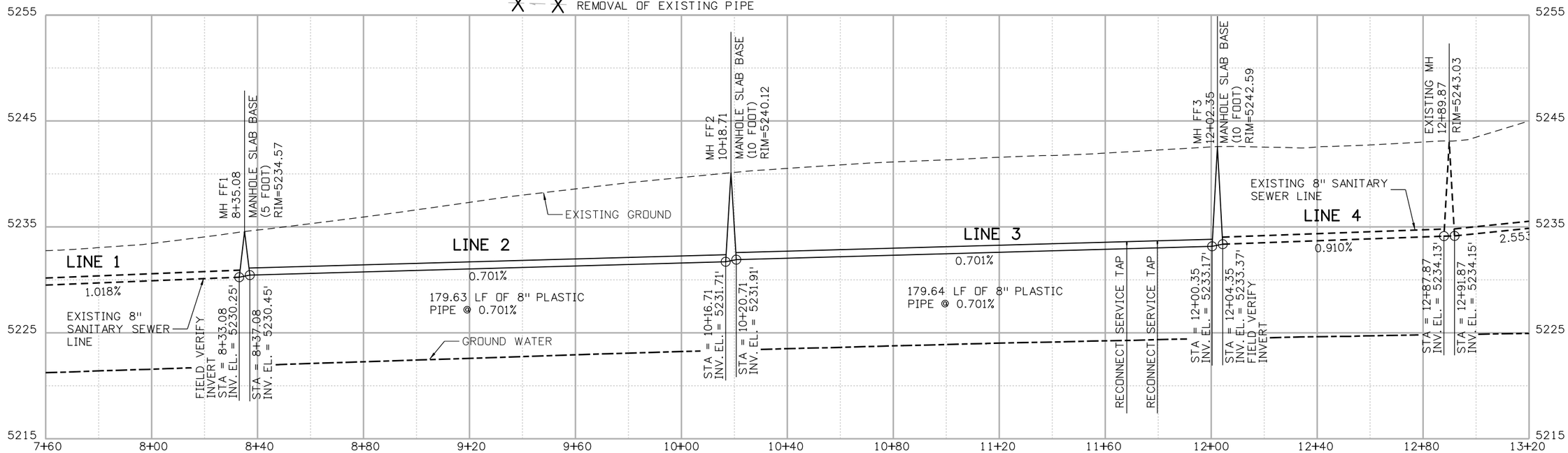

Print Date: 9/27/2010			
File Name: 16311HA UTIL_PH2_Sanitary Sewer Relocate01.dgn			
Horiz. Scale: 1:40	Vert. Scale: As Noted		
Unit Information	Unit Leader Initials		

FELSBURG HOLT & ULLEVIG — 6300 South Syracuse Way, Centennial, CO 80111

Sheet Revisions

Date:	Comments	Init.

Colorado Department of Transportation
DEPARTMENT OF TRANSPORTATION
2000 South Holly Street
Denver, CO 80222
Phone: 303-972-9112 FAX: 303-972-9114
Region 6 — RLB

As Constructed
No Revisions:
Revised:
Void:

I-25/SANTA FE INTERCHANGE
STAGE 1.2/1.3
SANITARY SEWER RELOCATION

Designer:	D. DYER	Structure Numbers	
Detailer:	D. DYER		
Sheet Subset:	UTILITY	Subset Sheets:	001 of 01

Project No./Code
IM 0254-394
16311
Sheet Number 438

ddyer 12:59:40 PM P:\FHU\Santa Fe & I-25\16311\Utilities\Drawings\16311HA UTIL_PH2_Sanitary Sewer Relocate01.dgn
9/27/2010 CDOT-DefaultPrinter_XM.pltcfg

Bd, Bf, Bp Values			
D	Bd (ft)	Bf (ft)	Bp (ft)
4"–8"	3.5	8.0	12.0
8"–10"	4.0	8.0	12.0
12"–15"	4.5	8.0	12.0
18"–21"	5.0	8.0	12.0
24"	5.5	8.0	12.0
27"–30"	6.0	8.0	12.0
33"	6.5	8.0	12.0
36"–42"	9.0	11.0	15.0
48"	10.0	12.0	16.0
54"	10.5	12.5	16.5
60"	11.0	13.0	17.0
66"	11.5	13.5	17.5
72"–78"	12.5	14.5	18.5
84"	13.5	15.5	19.5
90"	14.0	16.0	20.0
96"	14.5	16.5	20.5
102"	15.0	17.0	21.0
108"	16.0	18.0	22.0
120"	18.0	20.0	24.0
144"	20.0	22.0	25.0
14'	23.0	25.0	29.0

Bd= SPECIFIED MAXIMUM BEDDING TRENCH WIDTH AT A POINT 12" ABOVE TOP OF PIPE
Bf= ASPHALT BASE COURSE PAY WIDTH (8' MINIMUM OR Bd + 2', WHICHEVER IS LARGER)
Bp= MAXIMUM PAY WIDTH FOR ASPHALT OVERLAY (Bf + 4' MIN.)
t1= DEPTH OF ASPHALT OVERLAY (ASPHALT WEARING SURFACE)
t2= DEPTH FOR ASPHALT TRENCH PAVING
D= INSIDE DIAMETER OF THE SPECIFIED PIPE OR INSIDE WIDTH OF BOX CULVERT

NOTE:
1. PIPE TRENCHING AND SHORING TO BE IN ACCORDANCE WITH O.S.H.A. REGULATIONS.

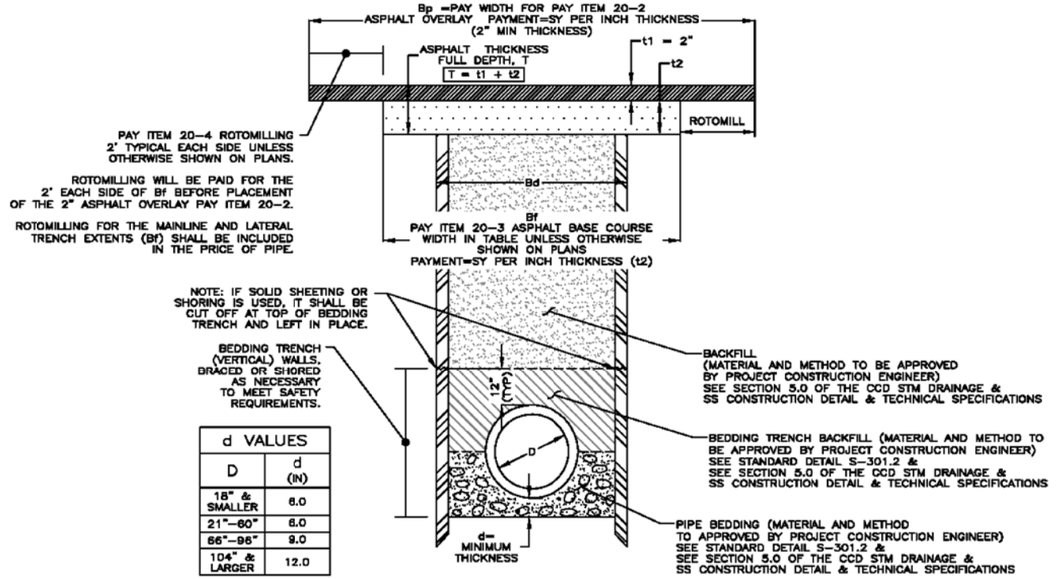

d VALUES	
D	d (IN)
18" & SMALLER	6.0
21"–60"	6.0
66"–96"	9.0
104" & LARGER	12.0

FIG. 1 TYPICAL TRENCH DETAIL

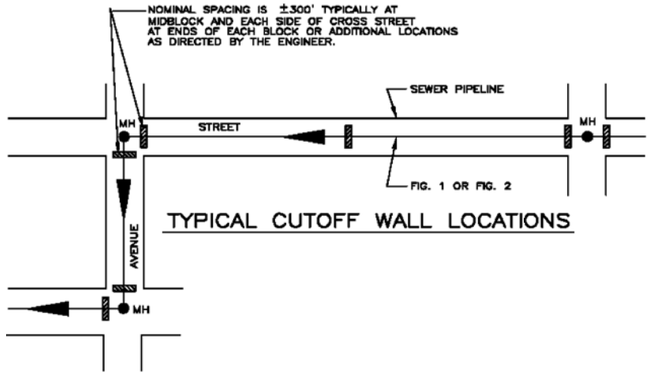

TYPICAL CUTOFF WALL LOCATIONS

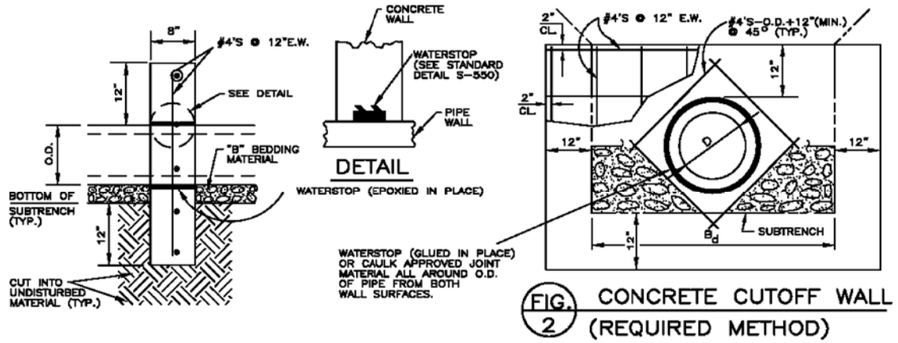

FIG. 2 CONCRETE CUTOFF WALL (REQUIRED METHOD)

NOTES:
1. IN GENERAL, REPLACEMENT QUANTITIES FOR PAVEMENT, SIDEWALK REMOVALS, ETC. ARE DETERMINED FROM THE MAXIMUM PAY WIDTH DIMENSION "B_W". THE ACTUAL FIELD TRENCH WIDTH MAY VARY. THE CONTRACTOR SHALL CONFORM TO ALL INDUSTRY AND OSHA SAFETY CRITERIA GOVERNING EXCAVATION AND PIPELINE CONSTRUCTION.
2. TRENCH SHALL BE BRACED AND SHORED AS NECESSARY TO AFFORD SAFE WORKING CONDITIONS OR TO PROTECT ADJACENT UTILITIES, STRUCTURES, ETC.. UNLESS OTHERWISE SPECIFIED ON THE PLANS, NO PAYMENT WILL BE MADE FOR REMOVAL, REPLACEMENT, OR RELOCATION OF CURB AND GUTTER, UTILITIES, SIDEWALK, STRUCTURES, ETC. OUTSIDE THE MAXIMUM LIMITS OF EXCAVATION AND THE
3. t_w AND t_t SHALL BE DETERMINED BY THE DESIGN ENGINEER. ALL ASPHALT QUANTITIES ARE PAID FOR ON A SQUARE YARD PER INCH DEPTH BASIS.
4. SLOPING, OR BENCHING OF THE TRENCH SIDE WALLS WHERE PERMITTED, SHALL BE IN ACCORDANCE WITH APPLICABLE FEDERAL, STATE, LOCAL, AND OSHA SAFETY REGULATIONS.
5. AREA FOR STREET CUT PERMIT SHALL BE B_W +12" EACH SIDE OF TRENCH I.e. B_W "PLUS" TWO FOOT TOTAL.

CITY AND COUNTY OF DENVER
DEPARTMENT OF PUBLIC WORKS
WASTEWATER MANAGEMENT DIVISION

STANDARD DETAILS
TRENCHING & BEDDING

ISSUE DATE 1/2010 | DRAWN BY RJK | CHECKED BY LJL | SHEET NO. 1 OF 2 SHEETS | DRAWING NO. S-301.1

STD. DRAWING NO.
S-301.1

NOTE:
TYPICAL FOR ALL NEW SANITARY SEWER MANHOLE STRUCTURES.

ddyer 10:45:36 AM P:\FHU\Santa Fe & I-25\16311\Utilities\Drawings\16311HA UTIL_PH2_DWWM DETAIL 1.dgn
9/27/2010 CDOT-DefaultPrinter_XM.pltcfg

Print Date: 9/27/2010
File Name: 16311HA UTIL_PH2_DWWM DETAIL 1.dgn
Horiz. Scale: 1:60 Vert. Scale: As Noted
Unit Information Unit Leader Initials

FELSBURG HOLT & ULLEVIG 6300 South Syracuse Way Centennial, CO 80111

CR-6

Sheet Revisions		
Date:	Comments	Init.
8-23-10	NEW SHEET	DAD

Colorado Department of Transportation
DEPARTMENT OF TRANSPORTATION
2000 South Holly Street
Denver, CO 80222
Phone: 303-972-9112 FAX: 303-972-9114
Region 6 RLB

As Constructed
No Revisions:
Revised:
Void:

I-25/SANTA FE INTERCHANGE
WASTEWATER MANAGEMENT DIVISION
STANDARD DETAIL S-301.1

Designer:
Detailer:
Sheet Subset: UTILITIES
Structure Numbers
Subset Sheets: 1 of 8

Project No./Code
IM 0254-394
16311
Sheet Number 439

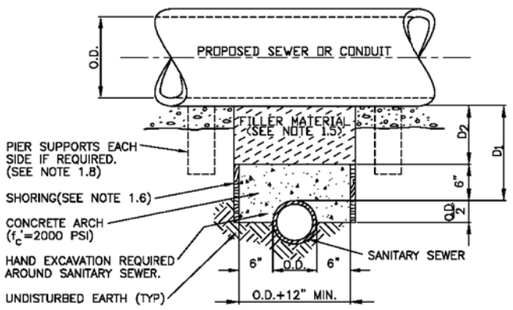

TYPE I

CONCRETE ENCASEMENT FOR SANITARY SEWERS

(CONCRETE ARCH) NO SCALE (RIGID CONDUITS ONLY)

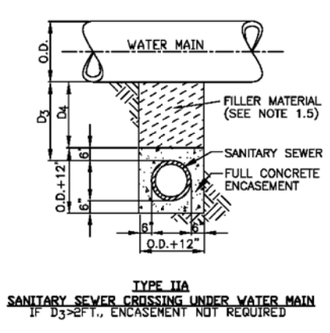

TYPE IIA

SANITARY SEWER CROSSING UNDER WATER MAIN

IF D_3>2FT., ENCASEMENT NOT REQUIRED

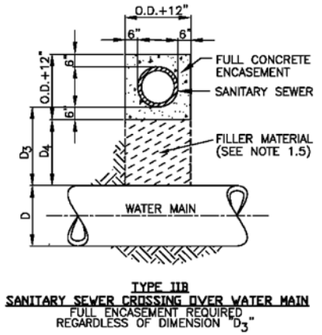

TYPE IIB

SANITARY SEWER CROSSING OVER WATER MAIN

FULL ENCASEMENT REQUIRED REGARDLESS OF DIMENSION "D_3"

TYPE II

CONCRETE ENCASEMENT FOR SANITARY SEWERS CROSSING OVER OR UNDER WATER MAIN

NO SCALE (RIGID CONDUITS ONLY)

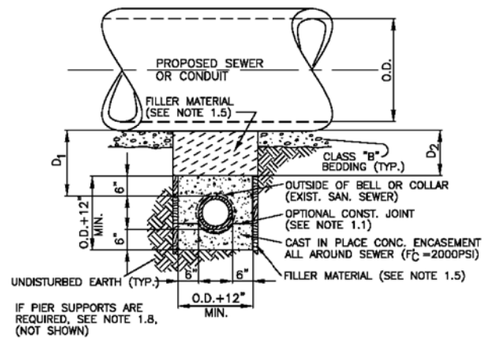

TYPE III

CONCRETE ENCASEMENT FOR SANITARY SEWERS

(FULL ENCASEMENT) NO SCALE (RIGID CONDUITS ONLY)

O.D.= OUTSIDE DIAMETER

STORM CONNECTOR PIPE CLOSURE DETAIL

[TO BE USED ONLY WHERE NECESSARY AND AS AUTHORIZED BY THE ENGINEER.]

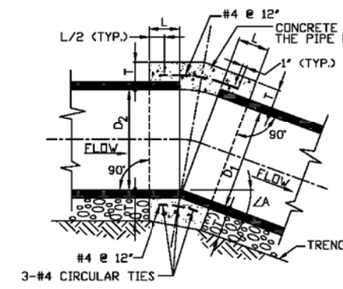

MINUMUM DIMENSIONS

D	L	T
15"	12"	5"
18"	12"	5"
21"	12"	6"

VERTICAL SECTION

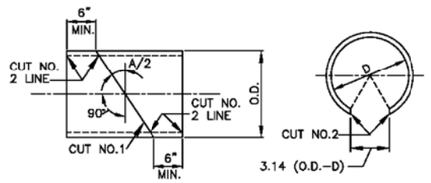

CUT NO.1: SAW THE TUBE AT AN ANGLE OF A/2 WITH THE TRANSVERSE PLANE. REVERSE ONE SECTION AND TAPE BOTH SECTIONS TOGETHER FORMING THE DEFLECTION ANGLE A.

CUT NO.2: SAW THE TUBE LONGITUDINALLY REMOVING A STRIP 3.14 (D_O–D) INCHES WIDE ON THE SIDE OPPISITE THE OPEN JOINT. BEND THE ENDS OF THE CUT TOGETHER AND INSERT THE TUBE IN THE PIPE.

NOTES: FOR STORM LINE CONNECTORS ONLY, NOT TO BE USED ON MAINLINE SEWERS.

AN INTERIOR FORM OF UNSEALED SONO-TUBE OR EQUAL SHALL BE USED TO PROVIDE A SMOOTH INTERIOR JOINT. (SEE DETAIL A)

DETAIL "A"

SONO-TUBE, OR EQUAL, INTERIOR FORM

GENERAL NOTES

1. A CONCRETE COLLAR IS REQUIRED WHERE THE CHANGE IN GRADE EXCEEDS 0.10 OF A FOOT PER FOOT.
2. GAP LIMITS

PIPE DIAMETER	COLUMN "A" (SEE A BELOW)	COLUMN "B" (SEE B BELOW)
21" OR LESS	1/2"	1"

A. IF THE "EXTREME OUTER ENDS" OF THE PIPE LEAVE A GAP THAT EXCEEDS VALUES IN COLUMN "A" OR COLUMN "B", A CONCRETE COLLAR IS REQUIRED.

B. IF THE GAP EXCEEDS 6 INCHES, A MANHOLE STRUCTURE IS REQUIRED.

3. CONCRETE COLLAR SHALL NOT BE USED FOR A SIZE CHANGE ON THE MAIN LINE.
4. FOR PIPE SIZE NOT LISTED USE NEXT SIZE LARGER.
5. WHERE REINFORCING IS REQUIRED THE DIAMETER OF THE CIRCULAR TIES SHALL BE D+(2X WALL THICKNESS)+T.
6. REINFORCING SHALL BE USED WHERE THE SPACES BETWEEN THE EXTREME OUTER ENDS IS 2 1/2" OR LARGER.

	PIPE DIAMETER	SPACE BETWEEN EXTREME OUTER ENDS	NO. OF CIRCULAR TIES
CIRCULAR TIES:	21" OR LESS	2 1/2"	3

WHERE THE SPACE BETWEEN PIPE LONGITUDINAL ENDS EXCEEDS 2 1/2", THE NUMBER OF CIRCULAR TIES SHALL BE INCREASED TO MAINTAIN AN APPROXIMATE SPACING OF 6" OC.

7. AN INTERIOR FORM OF UNSEALED SONO-TUBE OR EQUAL SHALL BE USED TO PROVIDE A SMOOTH INTERIOR JOINT. THE PAPER FORM MAY BE LEFT IN PLACE (SEE DETAIL A).
8. THIS DETAIL APPLIES "ONLY" TO PIPE 21" DIAMETER OR LESS.

GENERAL NOTES FOR TYPE I,II & III ENCASEMENT

1.1 CONCRETE TO BE CAST AGAINST UNDISTURBED SOIL OR SHORING. IF OPTIONAL CONSTRUCTION JOINT IS USED & BOTTOM HALF OF ENCASEMENT IS POURED SEPARATELY, A ONE INCH LAYER OF SAND OR MORTAR SHALL BE PLACED BETWEEN BOTTOM OF SANITARY SEWER AND TOP OF CONCRETE.

1.2 LENGTH OF ENCASEMENT FOR :
(A) TYPE I & III ENCASEMENT SHALL EXTEND FULL TRENCH WIDTH EXCAVATED FOR PROPOSED SEWER OR CONDUIT.
(B) TYPE II ENCASEMENT SHALL EXTEND AT LEAST 10 FEET EACH SIDE OF WATER MAIN.

1.3 UNLESS OTHERWISE NOTED ON PLAN/PROFILE DRAWINGS, TYPE I,II,&III ENCASEMENTS NEED NOT BE REINFORCED. REINFORCEMENT, IF REQUIRED, TO BE SPECIFIED AND DETAILED SEPARATELY ON PLAN & PROFILE DRAWINGS.

1.4 TYPE I, II OR III ENCASEMENT REQUIRED UNDER FOLLOWING CONDITIONS :
(A) TYPE I OR TYPE III IF $D_1 \leq 18"(D_2 \leq 12")$ EXCEPT FOR SANITARY SEWERS CROSSING OVER OR UNDER WATER MAINS.
(B) TYPE IIA REQUIRED FOR SANITARY SEWERS CROSSING UNDER WATER MAINS AND $D_3 \leq 24"(D_4 \leq 18")$.
(C) TYPE IIB REQUIRED FOR SANITARY SEWERS CROSSING OVER TOP OF WATER MAINS, REGARDLESS OF DIMENSION "D_3".
(D) EXCEPT FOR UNUSUAL CIRCUMSTANCES, WATER MAIN CROSSINGS, OR WHERE UNSTABLE SOIL CONDITIONS ARE ENCOUNTERED, TYPE I ENCASEMENT WILL NORMALLY BE SATISFACTORY.
(E) IF THE SANITARY SEWER IS REPLACED OR CONSTRUCTED OF CAST IRON PIPE (AWWA C-106 OR C-108) OR DUCTILE IRON PIPE (AWWA C-150 OR C-151), CONCRETE ENCASEMENT MAY NOT BE REQUIRED.

1.5 FILLER MATERIAL BETWEEN CONDUITS TO BE :
(A) APPROVED COMPRESSIBLE MATERIAL SUCH AS STYROFOAM, ETC., IF D_2 & $D_4 \leq 6"$.
(B) COMPACTED CLASS "B" BEDDING IF D_2 & $D_4 > 6"$. (IF $D_4 > 6"$ FOR TYPE IIB ENCASEMENT POUR CONCRETE ON UNDISTURBED SOIL).

1.6 SHORING OR SHEETING, IF USED, TO BE CUT OFF AT TOP OF ENCASEMENT.

1.7 THESE ENCASEMENT DETAILS MAY ALSO BE APPLICABLE FOR CONDUITS OTHER THAN STORM OR SANITARY SEWER INSTALLATIONS.

1.8 IN CERTAIN SITUATIONS WHERE CONDUIT DIAMETER "D" IS EXTREMELY LARGE, PIER SUPPORTS EACH SIDE OF SANITARY SEWER MAY ALSO BE REQUIRED. IF REQUIRED, SUPPORTS TO BE SPECIFIED AND DETAILED SEPARATELY ON PLAN AND PROFILE DRAWINGS. NO PIPE JOINTS OVER TOP OF WATER MAIN.

1.9 DETAILS SHOWN CONSIDER RIGID CONDUITS ONLY. FLEXIBLE CONDUITS REQUIRE SPECIAL CONSIDERATION.

REVISED	
BY	DATE

CITY AND COUNTY OF DENVER
DEPARTMENT OF PUBLIC WORKS
WASTEWATER MANAGEMENT DIVISION

STANDARD DETAILS
CONCRETE ENCASEMENT/CLOSURE OF RIGID CONDUITS

ISSUE DATE	DRAWN BY DV	SHEET NO. 1	DRAWING NO.
6/94	CHECKED BY LL	OF 1 SHEETS	S-350

STD. DRAWING NO.
S-350

NOTE:
TYPICAL FOR ALL NEW SANITARY SEWER MANHOLE STRUCTURES.

Print Date: 9/27/2010			Sheet Revisions			As Constructed	I-25/SANTA FE INTERCHANGE WASTEWATER MANAGEMENT DIVISION STANDARD DETAIL S-350		Project No./Code
File Name: 16311HA UTIL_PH2_DWWM DETAIL 2.dgn			Date:	Comments	Init.	No Revisions:			IM 0254-394
Horiz. Scale: 1:60	Vert. Scale: As Noted	CR-6	8-23-10	NEW SHEET	DAD	Revised:	Designer:	Structure Numbers	16311
Unit Information	Unit Leader Initials					Void:	Detailer:		Sheet Number 440
FELSBURG HOLT & ULLEVIG 6300 South Syracuse Way Centennial, CO 80111							Sheet Subset: UTILITIES	Subset Sheets: 2 of 8	

Colorado Department of Transportation
DOT DEPARTMENT OF TRANSPORTATION
2000 South Holly Street
Denver, CO 80222
Phone: 303-972-9112 FAX: 303-972-9114
Region 6 RLB

ddyer 10:46:36 AM P:\FHU\Santa Fe & I-25\16311\Utilities\Drawings\16311HA UTIL_PH2_DWWM DETAIL 2.dgn
9/27/2010 CDOT-DefaultPrinter_XM.pltcfg

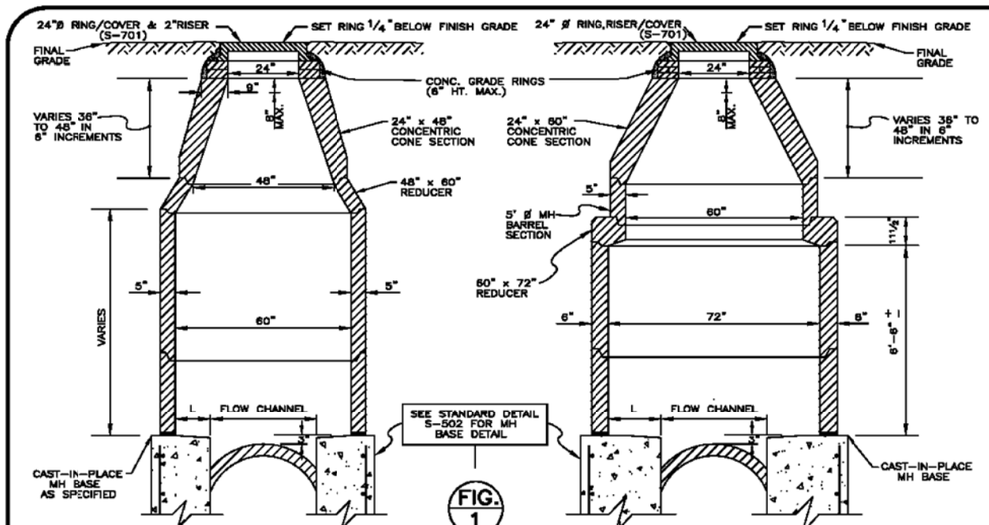

FIG. 1

5' I.D. MH WITH CONCENTRIC CONE
(30", 33" & 36" DIA. PIPE)

6' I.D. MH WITH CONCENTRIC CONE
(42" ø PIPE)

TO BE USED ONLY AT SPECIFIC DIRECTION OF THE ENGINEER
48" DIA. & LARGER MH'S SHALL BE TYPE B(S-503) OR TYPE P(S-504).

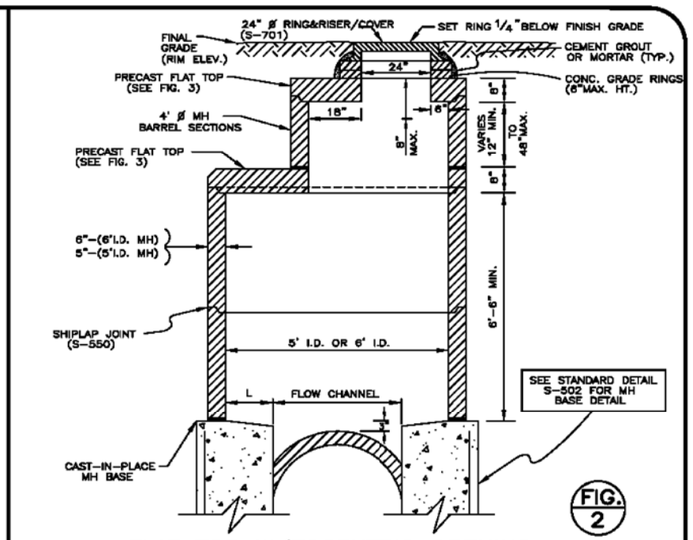

FIG. 2

FLAT TOP W/ECCENTRIC OPENING
5' I.D. MANHOLE (33" ø & 36" ø PIPE) OR 5' I.D. MANHOLE (42"ø PIPE)

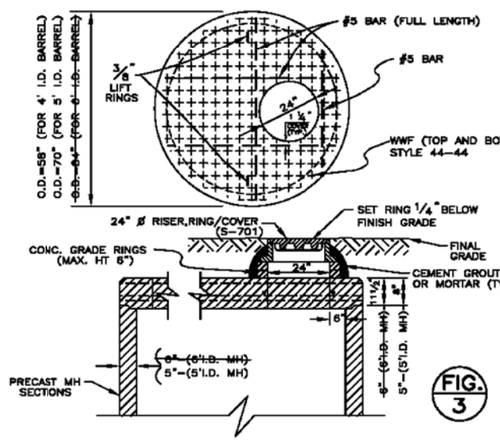

FIG. 3

FLAT TOP W/ECCENTRIC OPENING
5' I.D. MANHOLES

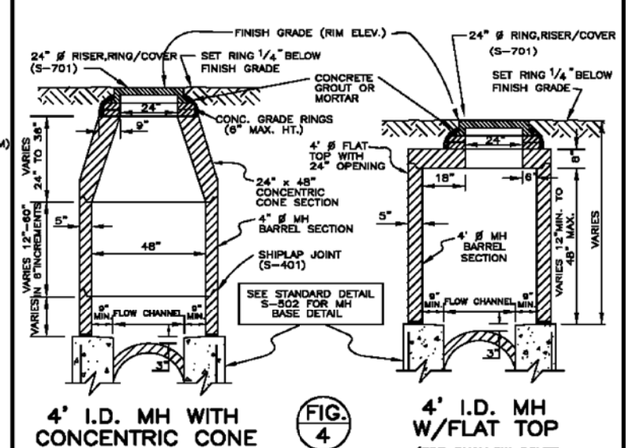

FIG. 4

4' I.D. MH WITH CONCENTRIC CONE
(30" ø PIPE OR LESS)

4' I.D. MH W/FLAT TOP
(FOR SHALLOW COVER LESS THAN 4' TO BENCH)

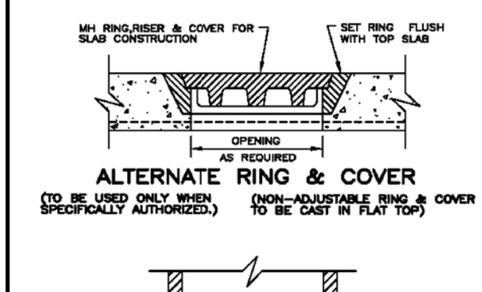

ALTERNATE RING & COVER
(TO BE USED ONLY WHEN SPECIFICALLY AUTHORIZED.) (NON-ADJUSTABLE RING & COVER TO BE CAST IN FLAT TOP)

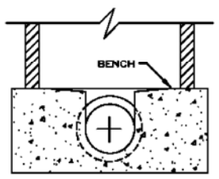

FIG. 5

IDEAL MH CHANNEL SECTION
(SEE STD. DETAIL S-502)

1. RING/COVER & 2" RISER SHALL BE SET ON A FULL BED OF MORTAR. (TYPE II CEMENT TYPICAL).
2. FLAT TOP SECTIONS (FIG. 2, 3, & 4), MAY BE USED IN LIEU OF CONCENTRIC MANHOLES WHEN SPECIFICALLY APPROVED BY THE PROJECT ENGINEER.
3. FOR MANHOLE DEPTHS LESS THAN 4' FROM RIM TO TOP OF BENCH, VERTICAL MANHOLE BARRELS WITH PRECAST FLAT TOP SECTIONS ARE REQUIRED.
4. ALL PRECAST MANHOLE SECTIONS, FLAT TOPS, BARRELS, REDUCERS ETC. SHALL CONFORM TO ASTM C-478, STANDARD SPECIFICATIONS FOR PRECAST REINFORCED MANHOLE SECTIONS.
5. FLAT TOPS (FIG. 2, 3, & 4) SHALL BE CAPABLE OF WITHSTANDING H-20 LIVE LOADS.
6. FLAT TOP SECTION WITH CONCENTRIC OPENING IS NOT ALLOWED. (SEE FIG. 3.)
7. ALL MANHOLE BARRELS, CONES, FLAT TOP SECTIONS AND RINGS SHALL INDICATED DATE, MANUFACTURER, SIZE AND ASTM C-478.
8. FOR DEPTHS GREATER THAN 20' (RIM TO INVERT) SHOP DRAWINGS, CALCULATIONS OF WALLS , TOP AND BOTTOM SLABS SHAL BE SUBMITTED.
9. AN APPROVED FLEXIBLE PLASTIC SEALANT IS REQUIRED IN SHIPLAP JOINTS AND IN JOINTS BETWEEN FLAT TOP BARREL SECTIONS, CONE SECTIONS, ETC.
10. DIMENSION L ="9" MINIMUM FOR ALL SANITARY SEWER MANHOLES (FIG. 1 & 2).
11. DESIGN ENGINEER OR PROJECT ENGINEER MAY INCREASE MH SIZE FOR SPECIAL DESIGN CONSIDERATIONS.
12. SET 24" MANHOLE RING 1/4"BELOW FINISH GRADE ALL MANHOLES. (TYPICAL FOR ALL APPLICATIONS UNLESS DETAILED OTHERWISE.)
13. ALL MORTAR AND GROUT SHALL USE TYPE II CEMENT.
14. FACE OF GRADE RINGS & SHIPLAP JOINTS SHALL BE GROUTED WITH AN APPROVED NON-SHRINK GROUT.
15. MANHOLE STEPS SHALL NOT BE INSTALLED OVER THE FLOW CHANNEL. THEY SHALL BE PLACED 12" MINIMUM OR 16" MAXIMUM IN STRAIGHT VERTICAL ALIGNMENT WITH THE BOTTOM STEP 8" ABOVE THE BENCH MINIMUM. SEE STANDARD DETAIL S-750 AND S-502.
16. THE NUMBER OF CONNECTORS INTO A MANHOLE SHALL BE LIMITED TO TWO.
17. 6"DIA MH'S ALLOWED ONLY WITH 42" PIPE AND SPECIFIC APPROVAL OF THE ENGINEER.

CITY AND COUNTY OF DENVER
DEPARTMENT OF PUBLIC WORKS
WASTEWATER MANAGEMENT DIVISION

STANDARD DETAILS
STANDARD PRECAST MANHOLE BARREL AND TOP SECTIONS (24" Ø RING AND COVER)

ISSUE DATE: 1/2010 | DRAWN BY: DJK | CHECKED BY: LL | SHEET NO. 1 OF 1 SHEETS | DRAWING NO. S-501.1

STD. DRAWING NO.
S-501.1

NOTE:
TYPICAL FOR ALL NEW SANITARY SEWER MANHOLE STRUCTURES.

Print Date: 9/27/2010
File Name: 16311HA UTIL_PH2_DWWM DETAIL 3.dgn
Horiz. Scale: 1:60 Vert. Scale: As Noted
Unit Information Unit Leader Initials

FELSBURG HOLT & ULLEVIG 6300 South Syracuse Way Centennial, CO 80111

CR-6

Sheet Revisions		
Date:	Comments	Init.
8-23-10	NEW SHEET	DAD

Colorado Department of Transportation
DEPARTMENT OF TRANSPORTATION
2000 South Holly Street
Denver, CO 80222
Phone: 303-972-9112 FAX: 303-972-9114
Region 6 RLB

As Constructed
No Revisions:
Revised:
Void:

I-25/SANTA FE INTERCHANGE
WASTEWATER MANAGEMENT DIVISION
STANDARD DETAIL S-501.1

Designer: ———— Structure Numbers
Detailer: ————
Sheet Subset: UTILITIES Subset Sheets: 3 of 8

Project No./Code
IM 0254-394
16311
Sheet Number 441

dyer 10:47:17 AM P:\FHU\Santa Fe & I-25\16311\Utilities\Drawings\16311HA UTIL_PH2_DWWM DETAIL 3.dgn
9/27/2010 CDOT-DefaultPrinter_XM.pltcfg

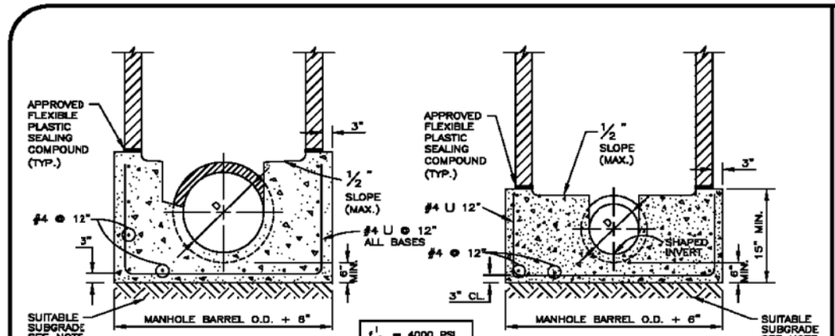

TABLE I

PIPE DIAMETER	MH-BARREL DIAMETER
30" OR LESS	4'
33" – 36"	5'

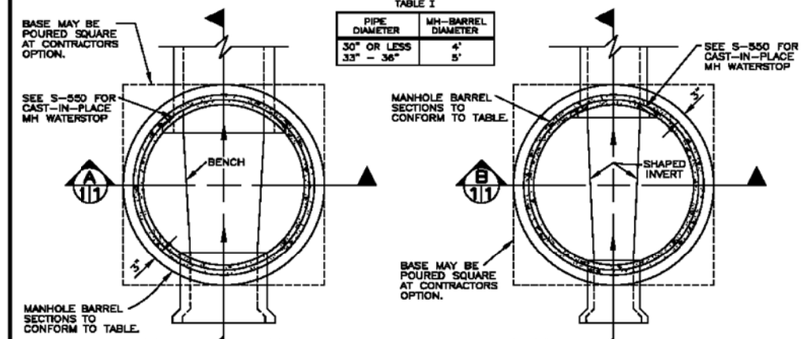

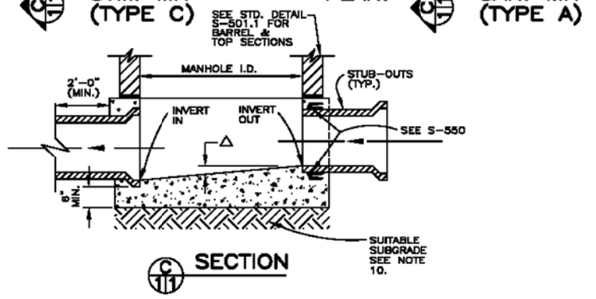

NOTES:
1. MANHOLE BARREL MINIMUM DIAMETER SHALL CONFORM TO TABLE I.
2. GROUTED FLOW CHANNELS AND INVERTS MAY BE FORMED BY SHAPING WITH LEAN CONCRETE (f'_c =2000 PSI MIN.).
3. MANHOLE STEPS SHALL CONFORM TO DIVISION SPECIFICATIONS AND WND STANDARD DETAILS S-750.
4. ALL DEAD END MANHOLES SHALL BE STUBBED THRU AT 0.40% MINIMUM SLOPE.
5. STUB-OUTS SHALL EXTEND 2'-0" MIN. PAST MANHOLE O.D. AND BE SATISFACTORILY PLUGGED.
6. REINFORCING IS REQUIRED FOR ALL MANHOLE BASES.
7. SLOPE MANHOLE BENCH ½" MAXIMUM TOWARD FLOW CHANNEL.
8. △=INVERT DROP THRU MANHOLE. FOR SANITARY SEWERS, IF △ ≥ 18", AN OUTSIDE DROP MANHOLE IS REQUIRED (S-530).
9. SHIPLAP JOINTS ON MANHOLE BARREL RISER SHALL CONFORM TO DIVISION STANDARDS AND SPECIFICATIONS (S-401).
10. ALL MANHOLE BASES SHALL BE PLACED ON SUITABLE SUBGRADE MATERIAL. AT THE DIRECTION OF THE ENGINEER THE SUBGRADE SHALL BE OVEREXCAVATED AND STABILIZED WITH AN ACCEPTABLE GRANULAR MATERIAL, COMPACTED TO 95% OF MAXIMUM DRY DENSITY IN ACCORDANCE WITH AASHTO T-180.
11. ALL PIPE OPENINGS SHALL BE CONSTRUCTED WITH AN APPROVED FLEXIBLE WEDGE-TYPE GASKET CONFORMING TO ASTM C-443 WHICH SHALL BE CAPABLE OF PROVIDING A WATER TIGHT JOINT WITH ZERO LEAKAGE AROUND THE INSTALLED PIPE (SEE S-550). AN APPROVED FLEXIBLE BOOT TYPE SLEEVE MAY ALSO BE USED FOR PRECAST INSTALLATIONS.
12. PRECAST BARREL SECTIONS, CONES, RISERS, ETC. SHALL CONFORM TO ASTM C-478, LATEST REVISION.

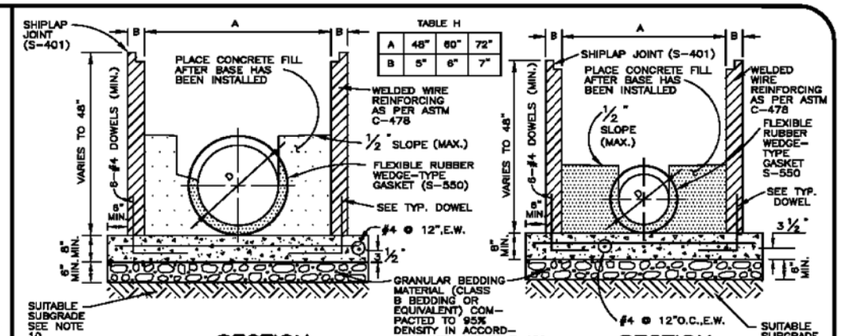

TABLE H

A	48"	60"	72"
B	5"	6"	7"

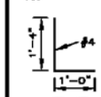

f'c = 4000 PSI
fy = 60,000 PSI

PRECAST

TABLE I

PIPE DIAMETER	MH-BARREL DIAMETER
30" OR LESS	4'
33" – 36"	5'

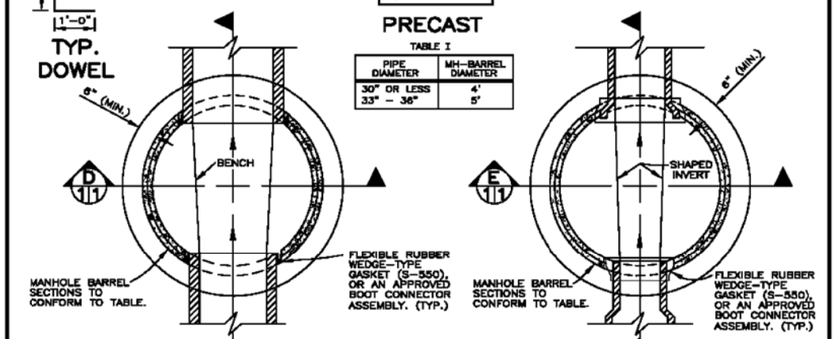

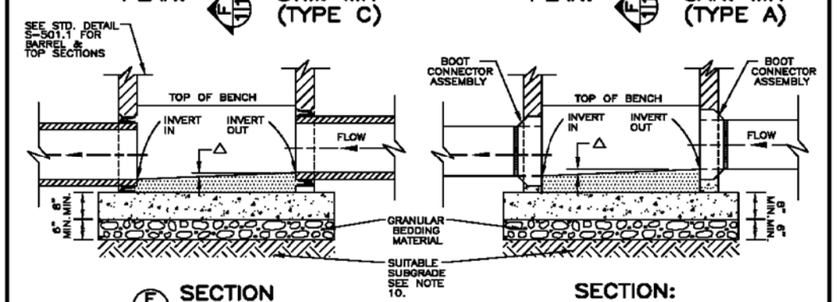

PRECAST MANHOLE BASES:
1. THE BASE SLAB SHALL BE POURED MONOLITHIC WITH BOTTOM RISER SECTION.
2. PRECAST MANHOLE BASES SHALL FIT THE CONDITIONS AND LOCATIONS FOR WHICH THEY ARE INTENDED WITHOUT ANY FIELD MODIFICATIONS. ANY MANHOLE BASE WHICH REQUIRES FIELD CUTTING OR MODIFICATION IN ORDER TO FIT THE LOCATIONS INTENDED SHALL BE REJECTED BY THE CITY AND REMOVED AND REPLACED BY THE CONTRACTOR AT NO COST TO THE CITY.
3. PRECAST MANHOLE BASES ARE TO BE BEDDED ON AN APPROVED GRANULAR BEDDING MATERIAL AS DETAILED ABOVE.

CITY AND COUNTY OF DENVER
DEPARTMENT OF PUBLIC WORKS
WASTEWATER MANAGEMENT DIVISION

STANDARD DETAILS
STANDARD MANHOLE BASE CONSTRUCTION
TYPE A AND TYPE C
(PRECAST SECTIONS & CAST-IN-PLACE)

ISSUE DATE	DRAWN BY DJC	SHEET NO. 1	DRAWING NO.
1/2010	CHECKED BY LA	OF 1 SHEETS	S-502

STD. DRAWING NO.
S-502

NOTE:
TYPICAL FOR ALL NEW SANITARY SEWER MANHOLE STRUCTURES.

dayer 10:49:42 AM P:\FHU\Santa Fe & I-25\16311\Utilities\Drawings\16311HA UTIL_PH2_DWWM DETAIL 4.dgn
9/27/2010 CDOT-DefaultPrinter_XM.pltcfg

Print Date: 9/27/2010	
File Name: 16311HA UTIL_PH2_DWWM DETAIL 4.dgn	
Horiz. Scale: 1:60	Vert. Scale: As Noted
Unit Information	Unit Leader Initials

FELSBURG HOLT & ULLEVIG 6300 South Syracuse Way Centennial, CO 80111

CR-6

Sheet Revisions

Date:	Comments	Init.
8-23-10	NEW SHEET	DAD

Colorado Department of Transportation
DEPARTMENT OF TRANSPORTATION
2000 South Holly Street
Denver, CO 80222
Phone: 303-972-9112 FAX: 303-972-9114
Region 6 RLB

As Constructed
No Revisions:
Revised:
Void:

I-25/SANTA FE INTERCHANGE
WASTEWATER MANAGEMENT DIVISION
STANDARD DETAIL S-502

Designer: ——— Structure Numbers
Detailer: ———
Sheet Subset: UTILITIES Subset Sheets: 4 of 8

Project No./Code
IM 0254-394
16311
Sheet Number 442

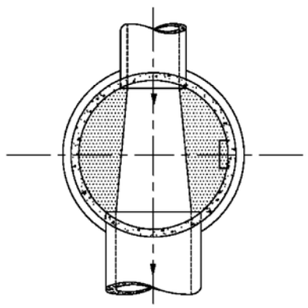

THROUGH PIPE

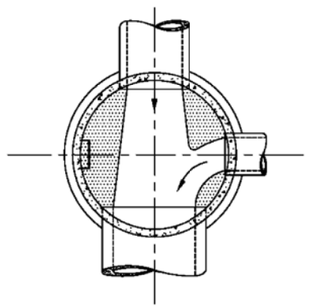

THROUGH PIPE
ONE LATERAL

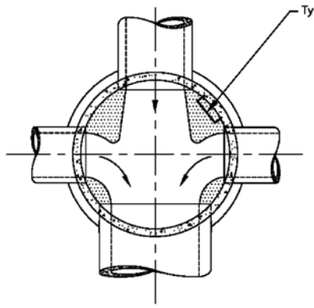

THROUGH PIPE
TWO LATERALS

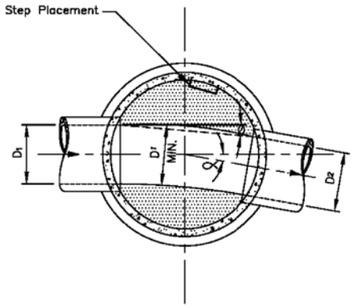

SLIGHT ANGLE
ø ≤ 15°
∝ ≤ 30°

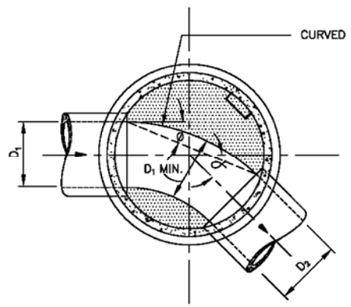

INTERMEDIATE ANGLE

ø = 45°
30° < ∝ < 90°

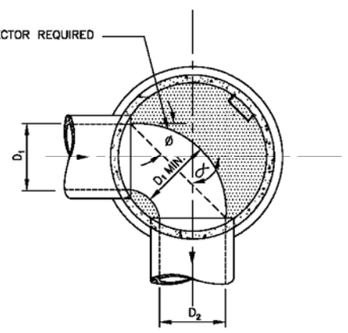

SHARP ANGLE

ø = 45°
∝ = 90°

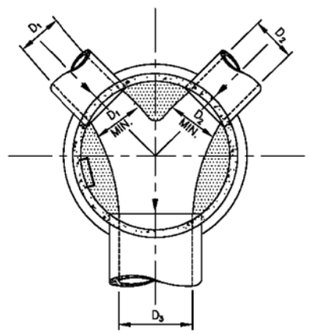

ANGLED LATERALS

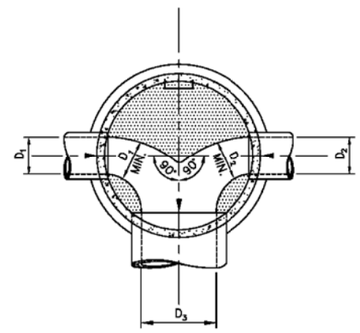

OPPOSED LATERALS

NOTES:
1. DETAILS SHOWN ARE TYPICAL ONLY FOR INSTALLATIONS WITH ALL INVERTS AT SAME RELATIVE ELEVATION.
2. FOR EXCESSIVE ELEVATION DIFFERENCE BETWEEN INVERTS, ETC. SPECIAL BASE/CHANNEL DETAILS SHALL BE SHOWN ON PLANS.
3. CHANNELIZATION DETAILS & STEP PLACEMENT TYPICAL FOR BOTH STORM AND SANITARY SEWER MH'S.
4. THE MINUMUM VERTICAL DROP THRU MANHOLE BASE SHALL BE 0.10 FOOT.
5. FOR VERTICAL DROPS IN EXCESS OF 1.5 FEET AN OUTSIDE DROP MANHOLE IS REQUIRED.

C:\DRAWINGS\WASTEWT\S520.DWG 3/1/95

REVISED		
	BY	DATE

CITY AND COUNTY OF DENVER
DEPARTMENT OF PUBLIC WORKS
WASTEWATER MANAGEMENT DIVISION

STANDARD DETAILS
TYPICAL MH BASE CHANNELIZATION

ISSUE DATE	DRAWN BY DW	SHEET NO. 1	DRAWING NO.
6/94	CHECKED BY LA	OF 1 SHEETS	S-520

STD. DRAWING NO.
S-520

NOTE:
TYPICAL FOR ALL NEW SANITARY SEWER MANHOLE STRUCTURES.

Print Date: 9/27/2010		Sheet Revisions			Colorado Department of Transportation	As Constructed	I-25/SANTA FE INTERCHANGE WASTEWATER MANAGEMENT DIVISION STANDARD DETAIL S-520	Project No./Code
File Name: 16311HA UTIL_PH2_DWWM DETAIL 5.dgn		Date:	Comments	Init.	2000 South Holly Street Denver, CO 80222 Phone: 303-972-9112 FAX: 303-972-9114	No Revisions:		IM 0254-394
Horiz. Scale: 1:60 Vert. Scale: As Noted	CR-6	8-23-10	NEW SHEET	DAD	Region 6 RLB	Revised:	Designer: Structure Numbers	16311
Unit Information Unit Leader Initials						Void:	Detailer:	Sheet Number 443
FELSBURG HOLT & ULLEVIG 6300 South Syracuse Way Centennial, CO 80111							Sheet Subset: UTILITIES Subset Sheets: 5 of 8	

ddyer 10:50:21 AM P:\FHU\Santa Fe & I-25\16311\Utilities\Drawings\16311HA UTIL_PH2_DWWM DETAIL 5.dgn
9/27/2010 CDOT-DefaultPrinter_XM.pltcfg

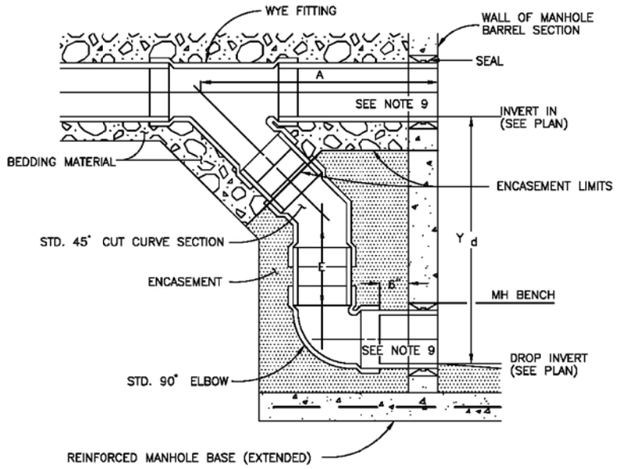

OUTSIDE DROP–DEEP: FOR PVC

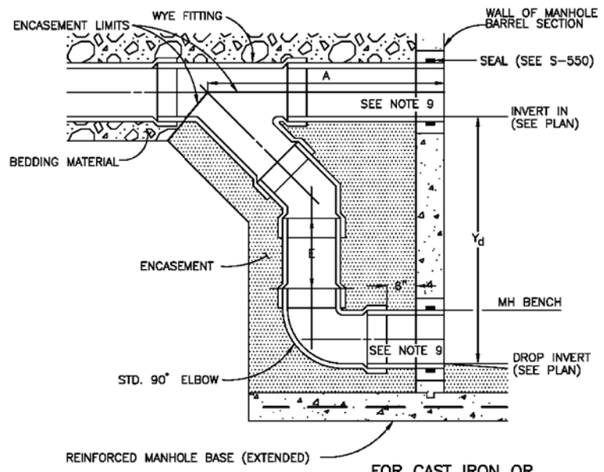

OUTSIDE DROP–DEEP: FOR CAST IRON OR DUCTILE IRON

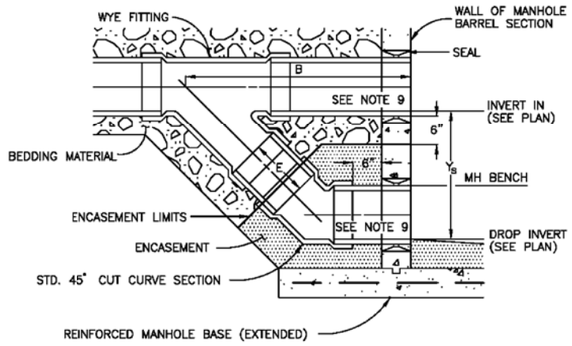

OUTSIDE DROP–SHALLOW: FOR PVC

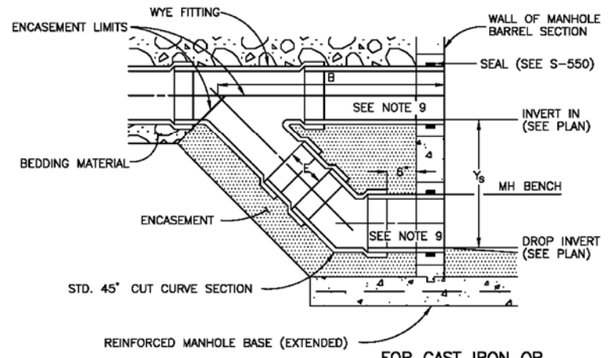

OUTSIDE DROP–SHALLOW: FOR CAST IRON OR DUCTILE IRON

DIMENSIONS (NOMINAL)	A (INCHES)				B (INCHES)				Y_d (INCHES)				Y_s (INCHES)			
PIPE DIAMETER (INCHES)	8	10	12	15	8	10	12	15	8	10	12	15	8	10	12	15
DUCTILE IRON PIPE (DIP)	32	37	39	44	36	39	42	50	30	33	39	44	18	18	18	24
POLYVINYL CHLORIDE (PVC)	42	47	49	65	41	43	51	61	31	37	39	55	18	18	22	28

A MANHOLE OUTSIDE DROP IS NOT FEASIBLE FOR A DROP OF LESS THAN 18". THE ABOVE DIMENSIONS INDICATE ONLY THE MINIMUM DROP OBTAINABLE WITH AVAILABLE FITTINGS AND MATERIAL. GREATER DROPS THAN THIS ARE POSSIBLE BY ADDITION OF THE APPROPRIATE PIPE LENGTH AT DIMENSION E.

C:\DRAWINGS\WMSTAND\SS530.DWG, 3/1/95

GENERAL NOTES:
1. ALL PIPE AND FITTINGS TO BE ASTM AND CITY APPROVED.
2. FOR PAYMENT PURPOSES, ALL FITTINGS, PIPE, CONCRETE ENCASEMENT SHALL BE INCLUDED IN THE UNIT PRICE OF THE OUT
3. DIAMETER OF THE PIPE SHALL NOT BE LESS THAN MAIN LINE PIPE DIAMETER.
4. FOR 18" DIAMETER AND LARGER, OUTSIDE DROP SHALL BE A SPECIAL DESIGN.
5. THE APPROPRIATE MH SEAL, ADAPTOR OR CONNECTOR SHALL BE USED FOR THE SPECIFIED PIPE MATERIAL, AND SHALL BE DWMD APPROVED.
6. OUTSIDE DROP SHALL BE ALL OF ONE MATERIAL.
7. CONCRETE ENCASEMENT SHALL BE A MINIMUM OF 6" THICK ALL AROUND.
8. PIPE DIMENSIONS ARE APPROXIMATE AND MAY VARY FROM ONE MANUFACTURER TO ANOTHER.
9. ALL REQUIRED WALL OPENINGS SHALL BE PRECAST BLOCK–OUTS OR CORE DRILLED. JACK HAMMERING OF OPENINGS IS NOT ALLOWED.

REVISED	
BY	DATE

CITY AND COUNTY OF DENVER
DEPARTMENT OF PUBLIC WORKS
WASTEWATER MANAGEMENT DIVISION

STANDARD DETAILS
MANHOLE OUTSIDE DROPS
(DROP THROUGH MANHOLES > 18")

ISSUE DATE 6/94 | DRAWN BY EMK | CHECKED BY LA | SHEET NO. 1 OF 1 SHEETS | DRAWING NO. S-530

STD. DRAWING NO.
S-530

NOTE:
TYPICAL FOR ALL NEW SANITARY SEWER MANHOLE STRUCTURES.

Print Date: 9/27/2010
File Name: 16311HA UTIL_PH2_DWWM DETAIL 6.dgn
Horiz. Scale: 1:60 Vert. Scale: As Noted
Unit Information Unit Leader Initials

FELSBURG HOLT & ULLEVIG 6300 South Syracuse Way Centennial, CO 80111

CR-6

Sheet Revisions		
Date:	Comments	Init.
8-23-10	NEW SHEET	DAD

Colorado Department of Transportation
DEPARTMENT OF TRANSPORTATION
2000 South Holly Street
Denver, CO 80222
Phone: 303-972-9112 FAX: 303-972-9114
Region 6 RLB

As Constructed
No Revisions:
Revised:
Void:

I-25/SANTA FE INTERCHANGE
WASTEWATER MANAGEMENT DIVISION
STANDARD DETAIL S-530

Designer:
Detailer:
Sheet Subset: UTILITIES
Structure Numbers
Subset Sheets: 6 of 8

Project No./Code
IM 0254-394
16311
Sheet Number 444

dayer 10:51:23 AM P:\FHU\Santa Fe & I-25\16311\Utilities\Drawings\16311HA UTIL_PH2_DWWM DETAIL 6.dgn
9/27/2010 CDOT-DefaultPrinter_XM.pltcfg

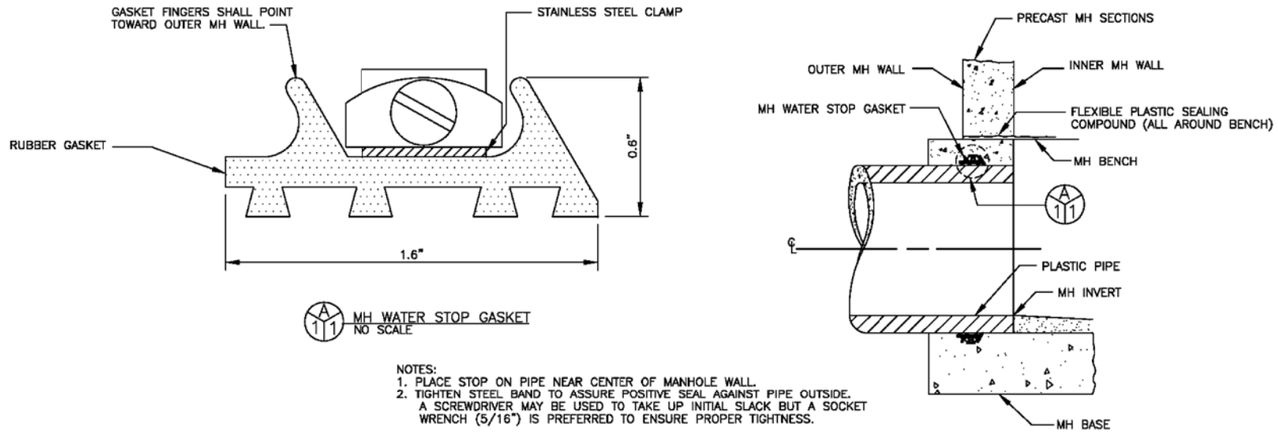

A 1 1 MH WATER STOP GASKET
NO SCALE

NOTES:
1. PLACE STOP ON PIPE NEAR CENTER OF MANHOLE WALL.
2. TIGHTEN STEEL BAND TO ASSURE POSITIVE SEAL AGAINST PIPE OUTSIDE. A SCREWDRIVER MAY BE USED TO TAKE UP INITIAL SLACK BUT A SOCKET WRENCH (5/16") IS PREFERRED TO ENSURE PROPER TIGHTNESS.

CAST-IN-PLACE MANHOLE CONNECTION DETAILS FOR PLASTIC PIPE
NO SCALE

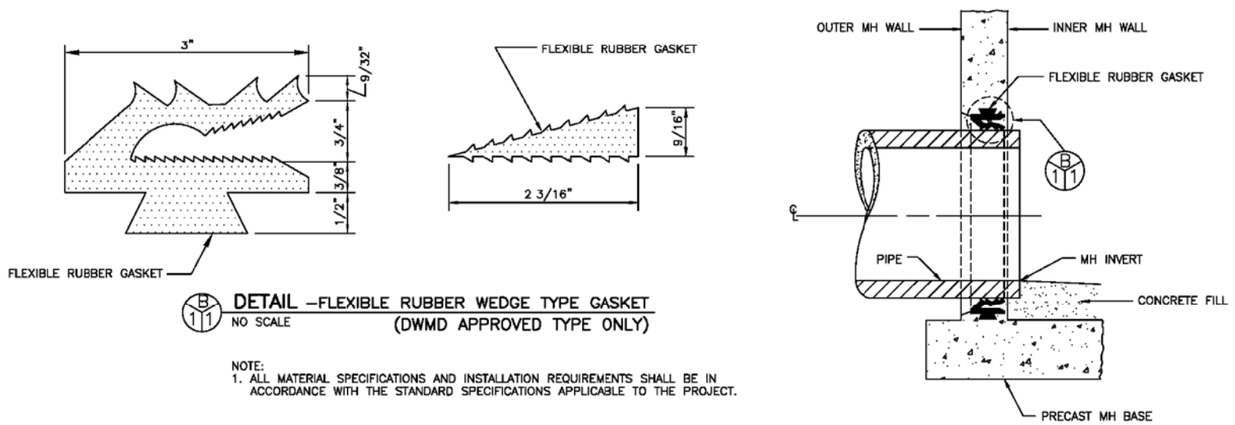

B 1 1 **DETAIL** –FLEXIBLE RUBBER WEDGE TYPE GASKET
NO SCALE (DWMD APPROVED TYPE ONLY)

NOTE:
1. ALL MATERIAL SPECIFICATIONS AND INSTALLATION REQUIREMENTS SHALL BE IN ACCORDANCE WITH THE STANDARD SPECIFICATIONS APPLICABLE TO THE PROJECT.

PRECAST MANHOLE CONNECTION DETAILS FOR ANY TYPE OF PIPE

C:\DRAWINGS\WWDETAILS\S550.DWG 3/1/95

REVISED	
BY	DATE

CITY AND COUNTY OF DENVER
DEPARTMENT OF PUBLIC WORKS
WASTEWATER MANAGEMENT DIVISION

STANDARD DETAILS
MH/PIPE WATER STOP GASKET

ISSUE DATE	DRAWN BY / CHECKED BY	SHEET NO. / OF SHEETS	DRAWING NO.
6/94	DW / LL	1 / 1 SHEETS	S-550

STD. DRAWING NO.
S-550

NOTE:
TYPICAL FOR ALL NEW SANITARY SEWER MANHOLE STRUCTURES.

Print Date: 9/27/2010			
File Name: 16311HA UTIL_PH2_DWWM DETAIL 7.dgn			
Horiz. Scale: 1:60	Vert. Scale: As Noted		
Unit Information	Unit Leader Initials		

FELSBURG HOLT & ULLEVIG 6300 South Syracuse Way Centennial, CO 80111

CR-6

Sheet Revisions

Date:	Comments	Init.
8-23-10	NEW SHEET	DAD

Colorado Department of Transportation
DEPARTMENT OF TRANSPORTATION
2000 South Holly Street
Denver, CO 80222
Phone: 303-972-9112 FAX: 303-972-9114
Region 6 RLB

As Constructed	
No Revisions:	
Revised:	
Void:	

I-25/SANTA FE INTERCHANGE
WASTEWATER MANAGEMENT DIVISION
STANDARD DETAIL S-550

Designer:		Structure Numbers	
Detailer:			
Sheet Subset: UTILITIES		Subset Sheets: 7 of 8	

Project No./Code
IM 0254-394
16311
Sheet Number 445

ddyer 10:51:56 AM P:\FHU\Santa Fe & I-25\16311\Utilities\Drawings\16311HA UTIL_PH2_DWWM DETAIL 7.dgn
9/27/2010 CDOT-DefaultPrinter_XM.pltcfg

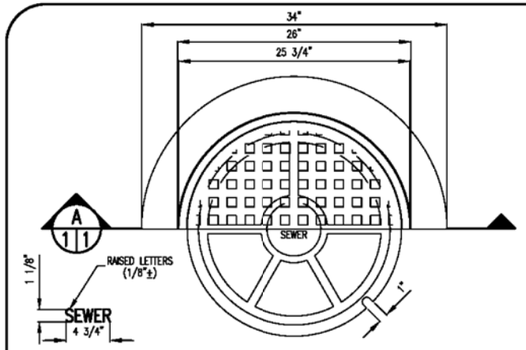

HALF PLAN

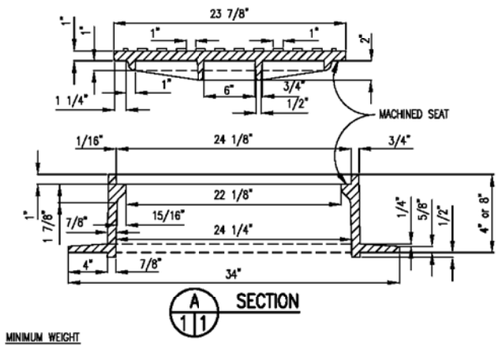

A 1 1 SECTION

MINIMUM WEIGHT

4" RING	8" RING
RING=165	RING=235
COVER=165	COVER=165
TOTAL=330#	400#

FIG. 1 CAST IRON 24" MANHOLE RING & COVER
DENVER STANDARD PATTERN

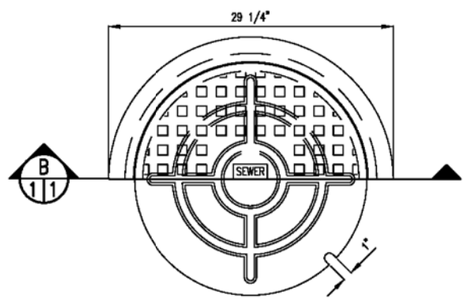

HALF PLAN

MINIMUM WEIGHT

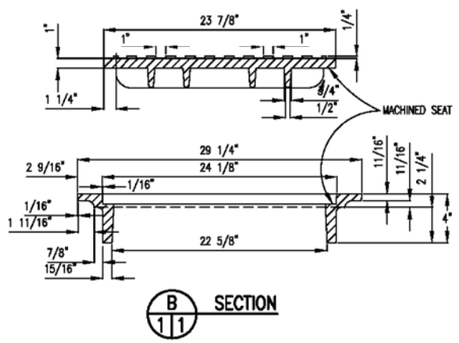

B 1 1 SECTION

FIG. 2 CAST IRON 24" MANHOLE RING & COVER
SLAB CONSTRUCTION

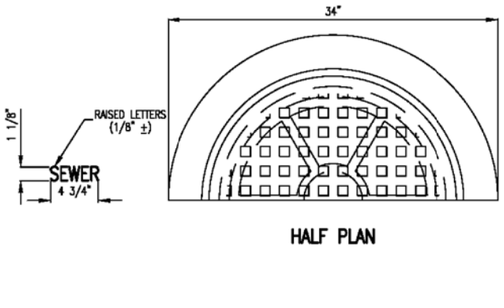

HALF PLAN

MINIMUM WEIGHT

4" RING	8" RING
RING=60#	RING=80#
COVER=60#	COVER=60#
TOTAL=120#	TOTAL=140#

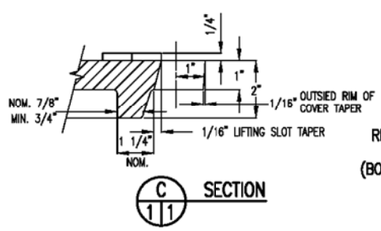

C 1 1 SECTION

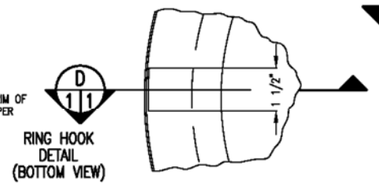

RING HOOK DETAIL (BOTTOM VIEW)

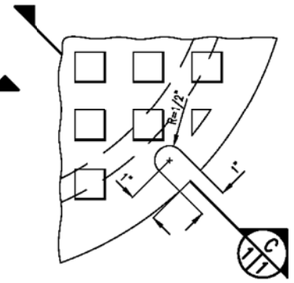

STANDARD LIFTING SLOT DETAIL
(TYPICAL FOR ALL COVERS)

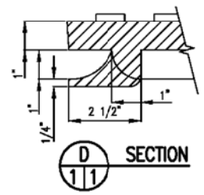

NOTES: CAST IRON
1. COVER SHALL BE THE DENVER STANDARD PATTERN OR ALTERNATE.
2. THE CASTING SHALL BE OF GRAY CAST IRON, ASTM DESIGNATION A48 CLASS 35B. THE MINIMUM TENSILE STRENGTH SHALL BE 35 KSI. THE TEST BAR DESIGNATION IS NOT DEFINED AT THIS TIME.
3. CASTINGS SHALL NOT BE DIPPED OR PAINTED.
4. CASTINGS SHALL BE CLEAN, TREE OF FUSED SAND AND REASONABLY SMOOTH. THERE SHALL BE NO PROMINENT BLOW HOLES, NO CRACKS OR FISSURES, AND NO OBSERVED INCOMPLETE FILLING OF THE MOLD.
5. THE MUD RING IS OPTIONAL.
6. THE 4 OR 5 INCH DEEP RING IS TO BE CONSIDERED AS STANDARD. THE 7 OR 8 INCH DEEP RING IS FOR USE IN DIRT OR LIGHT ASPHALT AND SHALL BE AT THE ENGINEER'S OPTION.
7. COVERS TO DISPLAY ON VISIBLE SURFACE, A48-35 (FOR 35KSI CI), MFG'S LOGO OR NAME, YEAR (2 DIGITS), AND COUNTRY OF ORIGIN IF IMPORTED.

1 REMOVE ALUMINUM COVER DETAILS

REVISED		
	BY	DATE
1	LJ.	1/02

CITY AND COUNTY OF DENVER
DEPARTMENT OF PUBLIC WORKS
WASTEWATER MANAGEMENT DIVSION

STANDARD DETAILS
FOR
24" DIA. RING AND COVER
DENVER STANDARD PATTERN

ISSUE DATE	DRAWN BY R.M.K. / CHECKED BY	SHEET NO. 1 OF 1 SHEETS	DRAWING NO. S-701

STD. DRAWING NO.
S-701

NOTE:
TYPICAL FOR ALL NEW SANITARY SEWER MANHOLE STRUCTURES.

Print Date: 9/27/2010		Sheet Revisions			Colorado Department of Transportation
File Name: 16311HA UTIL_PH2_DWWM DETAIL 8.dgn		Date:	Comments	Init.	2000 South Holly Street Denver, CO 80222 Phone: 303-972-9112 FAX: 303-972-9114
Horiz. Scale: 1:60	Vert. Scale: As Noted				Region 6 RLB
Unit Information	Unit Leader Initials				
FELSBURG HOLT & ULLEVIG 6300 South Syracuse Way Centennial, CO 80111					

As Constructed	I-25/SANTA FE INTERCHANGE WASTEWATER MANAGEMENT DIVISION STANDARD DETAIL S-701			Project No./Code
No Revisions:	Designer:	Structure Numbers		IM 0254-394
Revised:	Detailer:			16311
Void:	Sheet Subset: UTILITIES	Subset Sheets: 8 of 8		Sheet Number 446

ddyer 10:52:38 AM P:\FHU\Santa Fe & I-25\16311\Utilities\Drawings\16311HA UTIL_PH2_DWWM DETAIL 8.dgn
9/27/2010 CDOT-DefaultPrinter_XM.pltcfg

Know what's below. Call before you dig.

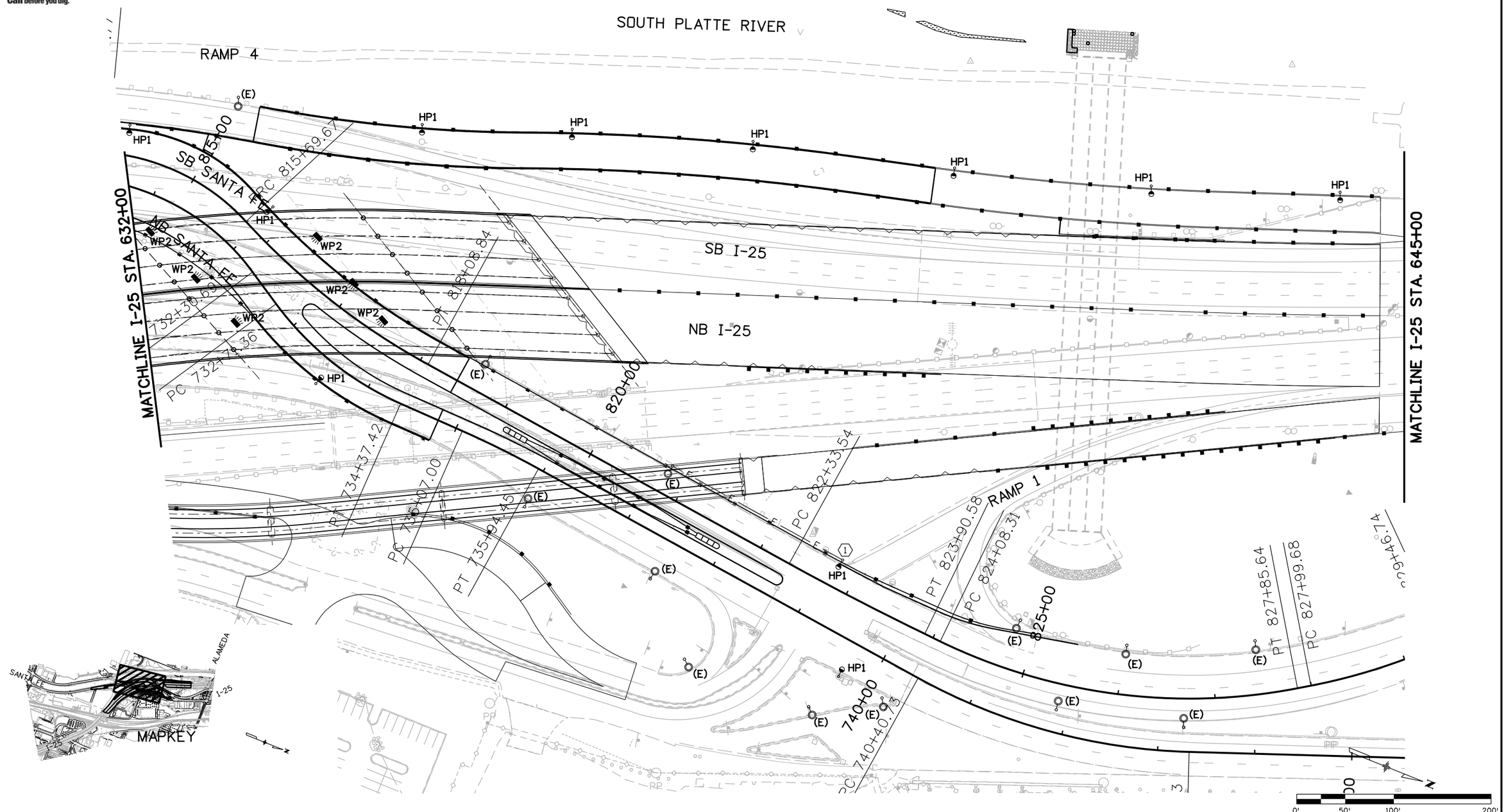

Print Date: 9/27/2010	Sheet Revisions	Colorado Department of Transportation	As Constructed
File Name: 16311LTG_PH2_SFLP-3.dgn	Date: Comments: Init.	2000 South Holly Street	No Revisions:
Horiz. Scale: 1:100 Vert. Scale: As Noted		Denver, CO 80222	Revised:
Unit Information Unit Leader Initials		Phone: 303-972-9112 FAX: 303-972-9114	Void:
Scanlon Szynskie Group, Inc. 3045 S. Parker Road, Suite 225 Aurora, Co 80014-2950 303.696.2602 fax 303.696.0812 SSG PROJECT NO.: 07029.00		Region 6 RLB	

I-25/SANTA FE INTERCHANGE SANTA FE ROADWAY LIGHTING PLAN			Project No./Code
Designer: KAT	Structure Numbers		IM 0254-394
Detailer: ADC			16311
Sheet Subset: LIGHTING	Subset Sheets: SFLP-03 of 22		Sheet Number 447

amy 12:55:47 PM N:\FELSBURG\125 Santa Fe\elec drawings\16311\Phase 1.2 - 1.3\Lighting\Drawings\16311LTG_PH2_SFLP-3.dgn
9/27/2010 CDOT-DefaultPrinter_XM.pltcfg CDOT-PenTable.tbl

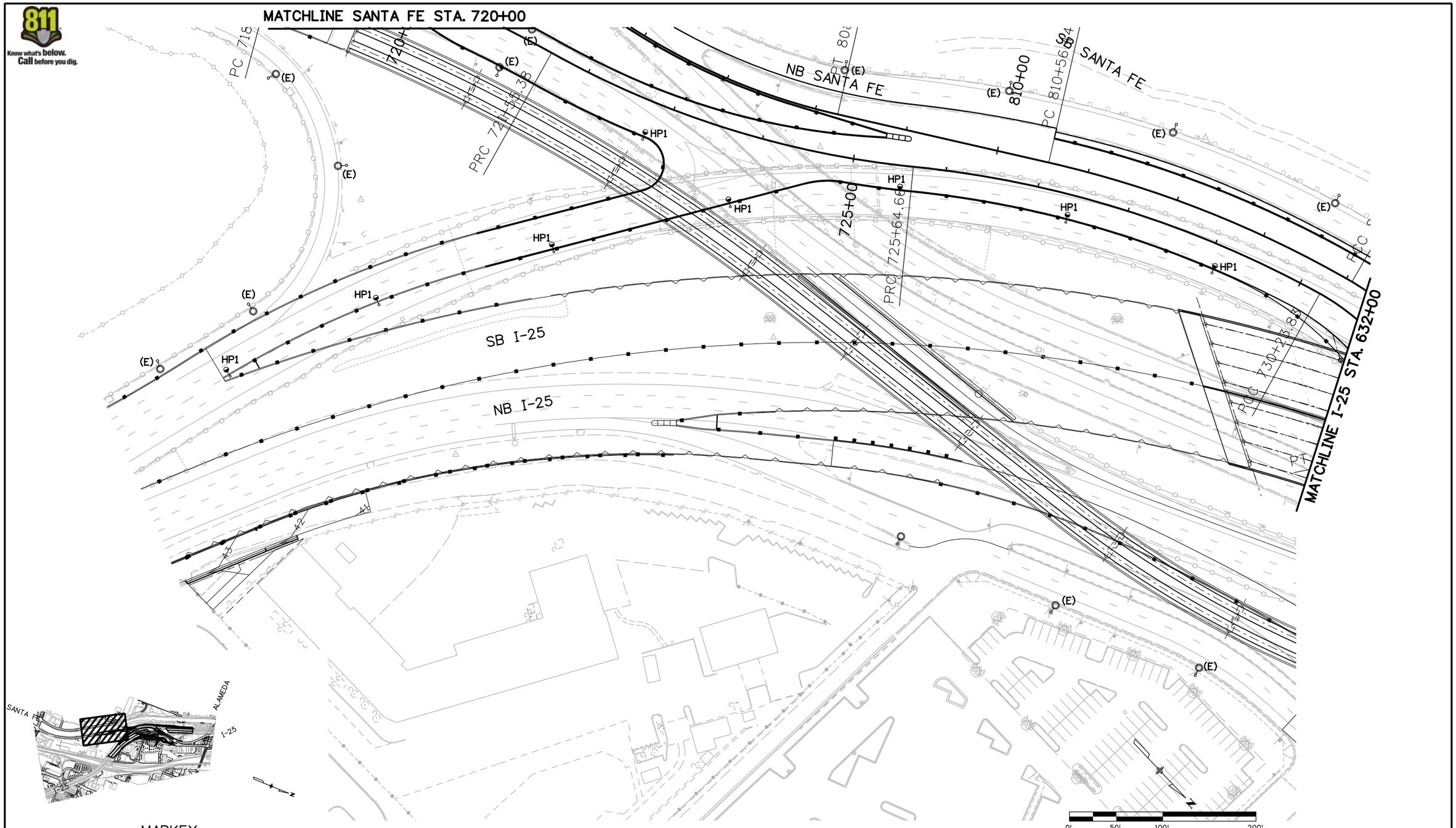

Print Date: 9/27/2010		Sheet Revisions		Colorado Department of Transportation	As Constructed	I-25/SANTA FE INTERCHANGE
File Name: 16311LTG_PH2_SFLP-2.dgn		Date:	Comments	Init.	No Revisions:	SANTA FE ROADWAY LIGHTING PLAN
Horiz. Scale: 1:100	Vert. Scale: As Noted				Revised:	Designer: KAT / Structure Numbers
Unit Information	Unit Leader Initials				Void:	Detailer: ADC
Scanlon Szynskie Group, Inc. 3045 S. Parker Road, Suite 225 Aurora, Co 80014-2950 303.696.2602 fax 303.696.0812	SSG PROJECT NO.: 07029.00					Sheet Subset: LIGHTING / Subset Sheets: SFLP-02 of 22

Colorado Department of Transportation
2000 South Holly Street
Denver, CO 80222
Phone: 303-972-9112 FAX: 303-972-9114
Region 6 RLB

Project No./Code
IM 0254-394
16311
Sheet Number 448

amy 12:53:37 PM N:\FELSBURG\I25 Santa Fe\elec drawings\16311\Phase 1.2 - 1.3\Lighting\Drawings\16311LTG_PH2_SFLP-2.dgn
9/27/2010 CDOT-DefaultPrinter_XM.pltcfg CDOT-PenTable.tbl

Know what's **below.** **Call** before you dig.

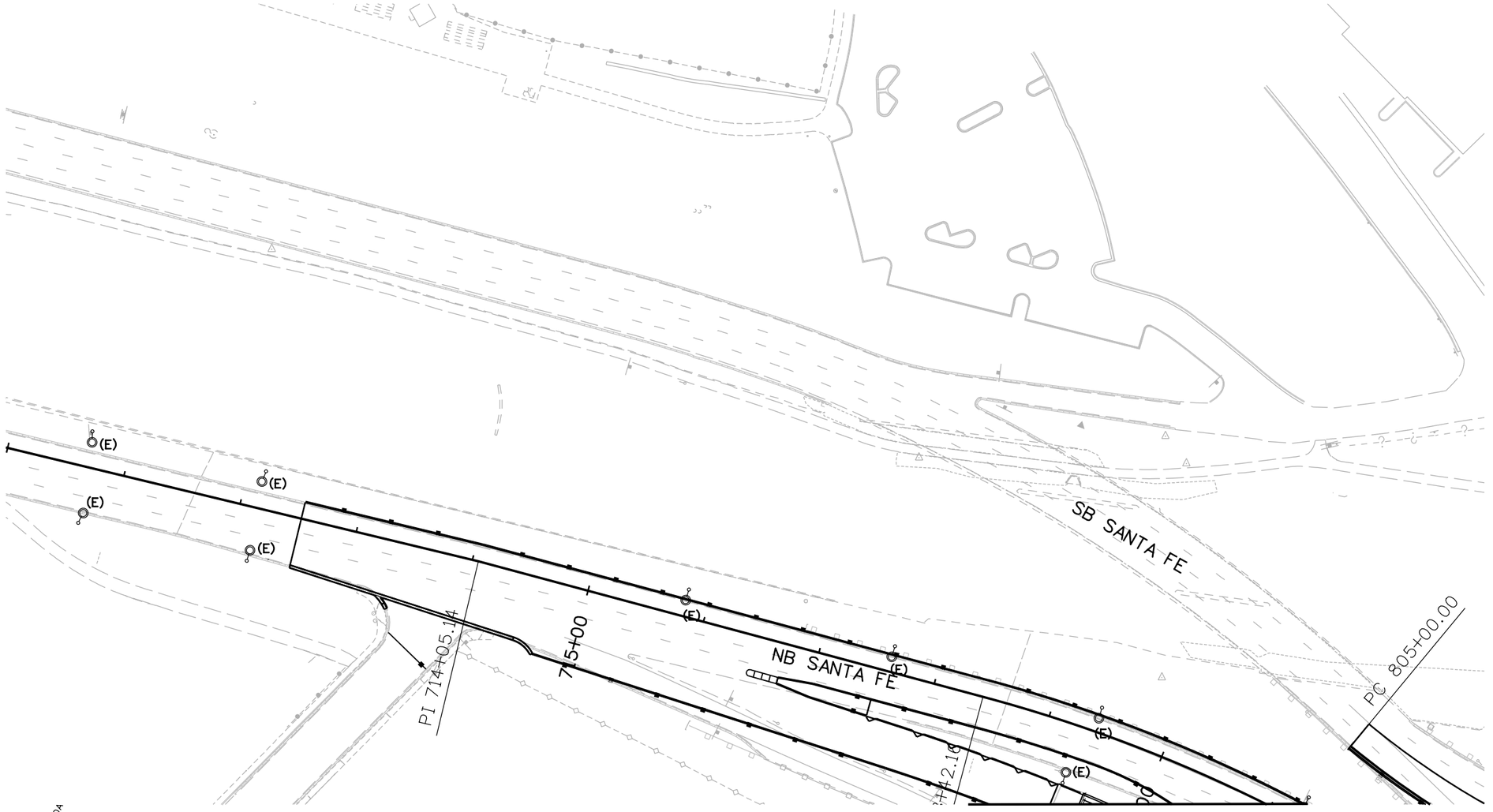

MATCHLINE SANTA FE STA. 720+00

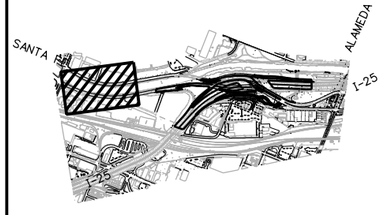

MAPKEY

0' 50' 100' 200'

Print Date: 9/27/2010		Sheet Revisions			Colorado Department of Transportation	As Constructed	I-25/SANTA FE INTERCHANGE	Project No./Code
File Name: 16311LTG_PH2_SFLP-1.dgn		Date:	Comments	Init.	2000 South Holly Street Denver, CO 80222 Phone: 303-972-9112 FAX: 303-972-9114	No Revisions:	SANTA FE ROADWAY LIGHTING PLAN	IM 0254-394
Horiz. Scale: 1:100 Vert. Scale: As Noted						Revised:	Designer: KAT / Detailer: ADC / Sheet Subset: LIGHTING	16311
Unit Information Unit Leader Initials					Region 6 RLB	Void:	Structure Numbers	Sheet Number 449
Scanlon Szynskie Group, Inc. 3045 S. Parker Road, Suite 225 Aurora, Co 80014-2950 303.696.2602 fax 303.696.0812	SSG PROJECT NO.: 07029.00						Subset Sheets: SFLP-01 of 22	

army 12:50:28 PM N:\FELSBURG\125 Santa Fe\elec drawings\16311\Phase 1.2 - 1.3\Lighting\Drawings\16311LTG_PH2_SFLP-1.dgn
9/27/2010 CDOT-DefaultPrinter_XM.pltcfg CDOT-PenTable.tbl

Know what's below. Call before you dig.

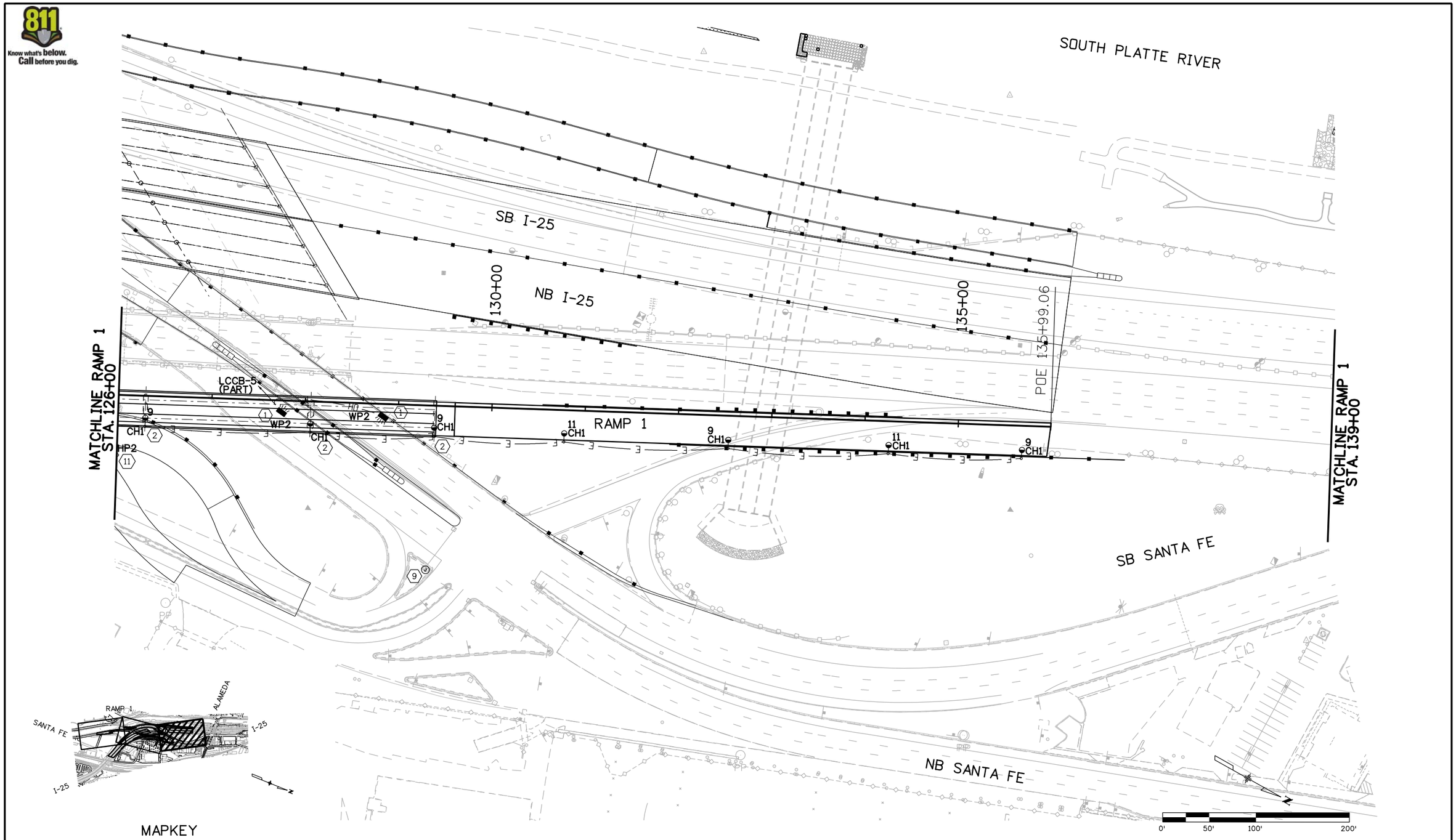

MAPKEY

Print Date: 9/27/2010	Sheet Revisions		
File Name: 16311LTG_PH2_Ramp1Plan3.dgn	Date:	Comments	Init.
Horiz. Scale: 1:100 Vert. Scale: As Noted			
Unit Information Unit Leader Initials			
Scanlon Szynskie Group, Inc. 3045 S. Parker Road, Suite 225 Aurora, Co 80014-2950 303.696.2602 fax 303.696.0812 SSG PROJECT NO.: 07029.00			

Colorado Department of Transportation
2000 South Holly Street
Denver, CO 80222
Phone: 303-972-9112 FAX: 303-972-9114
Region 6 RLB

As Constructed	I-25/SANTA FE INTERCHANGE RAMP 1 LIGHTING PLAN			Project No./Code
No Revisions:	Designer: KAT	Structure Numbers		IM 0254-394
Revised:	Detailer: ADC			16311
Void:	Sheet Subset: LIGHTING	Subset Sheets: RLP-3 of 22		Sheet Number 450

arny 12:49:38 PM N:\FELSBURG\125 Santa Fe\elec drawings\16311\Phase 1.2 - 1.3\Lighting\Drawings\16311LTG_PH2_Ramp1Plan3.dgn
9/27/2010 CDOT-DefaultPrinter_XM.pltcfg CDOT-PenTable.tbl

Know what's below. Call before you dig.

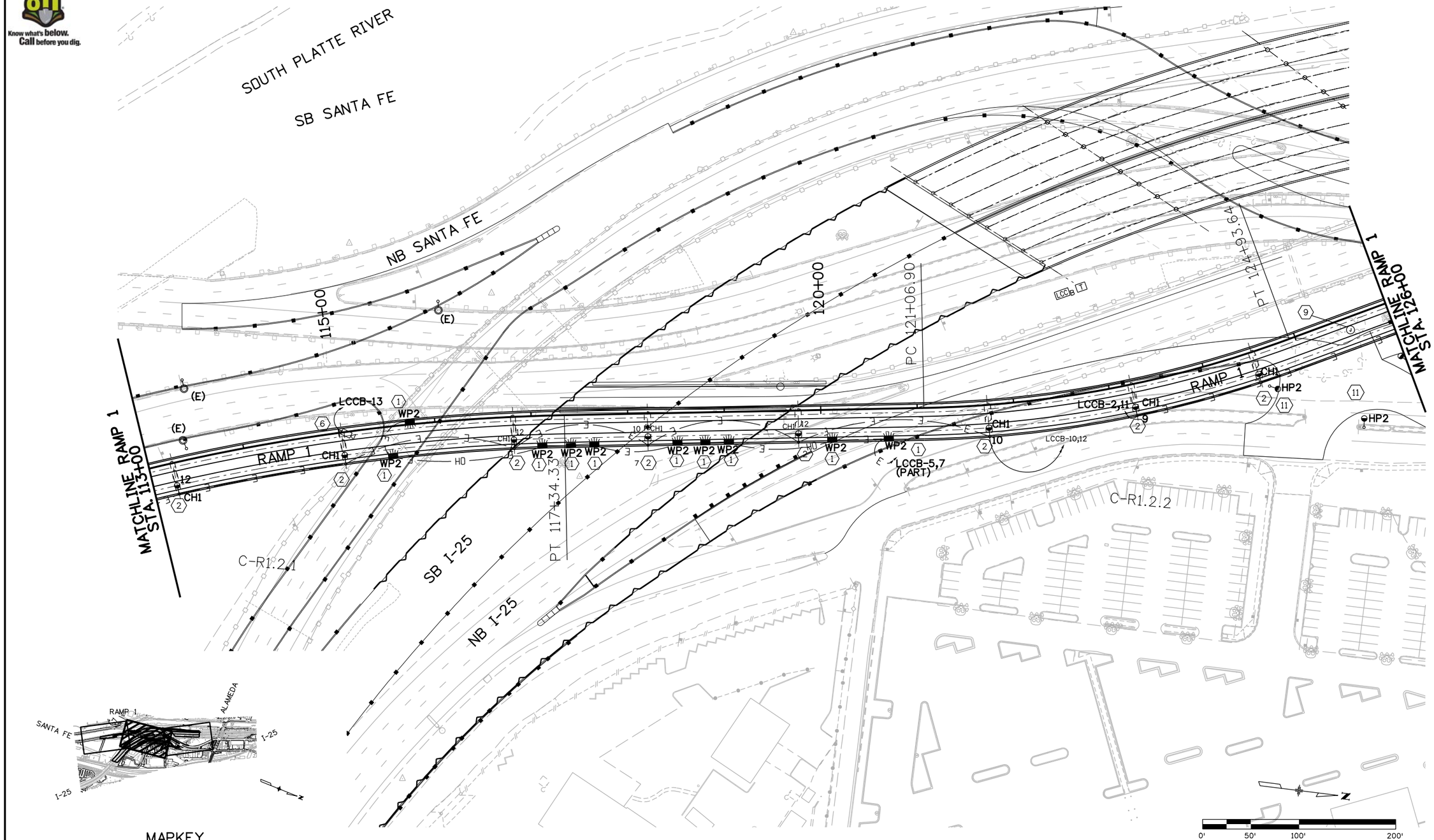

MAPKEY

Print Date: 9/27/2010		Sheet Revisions			Colorado Department of Transportation
File Name: 16311LTG_PH2_Ramp1Plan2.dgn		Date:	Comments	Init.	2000 South Holly Street Denver, CO 80222 Phone: 303-972-9112 FAX: 303-972-9114
Horiz. Scale: 1:100 Vert. Scale: As Noted					Region 6 RLB
Unit Information Unit Leader Initials					
Scanlon Szynskie Scanlon Szynskie Group, Inc. 3045 S. Parker Road, Suite 225 Aurora, Co 80014-2950 303.696.2602 fax 303.696.0812 SSG PROJECT NO.: 07029.00					

As Constructed	I-25/SANTA FE INTERCHANGE			Project No./Code
No Revisions:	RAMP 1 LIGHTING PLAN			IM 0254-394
Revised:	Designer: KAT	Structure Numbers		16311
Void:	Detailer: ADC			Sheet Number 451
	Sheet Subset: LIGHTING	Subset Sheets: RLP-2 of 22		

army 1:42:07 PM N:\FELSBURG\125 Santa Fe\elec drawings\16311\Phase 1.2 - 1.3\Lighting\Drawings\16311LTG_PH2_Ramp1Plan2.dgn
9/27/2010 CDOT-DefaultPrinter_XM.pltcfg CDOT-PenTable.tbl

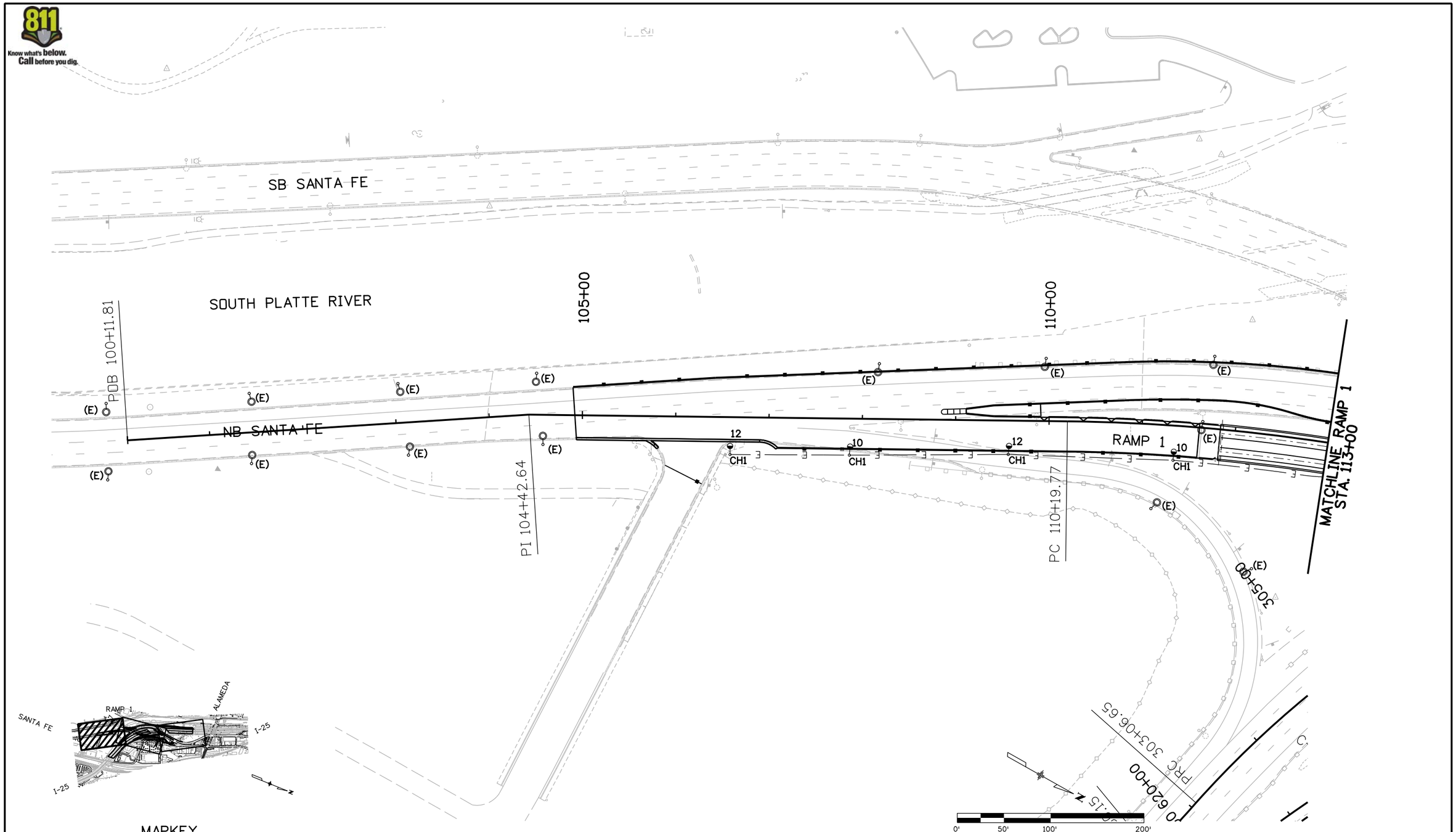

Print Date: 9/27/2010		Sheet Revisions		Colorado Department of Transportation	As Constructed	I-25/SANTA FE INTERCHANGE
File Name: 16311LTG_PH2_Ramp1Plan1.dgn		Date:	Comments	Init.	No Revisions:	RAMP 1 LIGHTING PLAN
Horiz. Scale: 1:100	Vert. Scale: As Noted				Revised:	Designer: KAT
Unit Information	Unit Leader Initials				Void:	Detailer: ADC
Scanlon Szynskie Group, Inc. 3045 S. Parker Road, Suite 225 Aurora, Co 80014-2950 303.696.2602 fax 303.696.0812	SSG PROJECT NO.: 07029.00					Structure Numbers
						Sheet Subset: LIGHTING
						Subset Sheets: RLP-1 of 22

Colorado Department of Transportation
2000 South Holly Street
Denver, CO 80222
Phone: 303-972-9112 FAX: 303-972-9114
Region 6 RLB

Project No./Code
IM 0254-394
16311
Sheet Number 452

amy 12:44:37 PM N:\FELSBURG\I25 Santa Fe\elec drawings\16311\Phase 1.2 - 1.3\Lighting\Drawings\16311LTG_PH2_Ramp1Plan1.dgn
9/27/2010 CDOT-DefaultPrinter_XM.pltcfg CDOT-PenTable.tbl

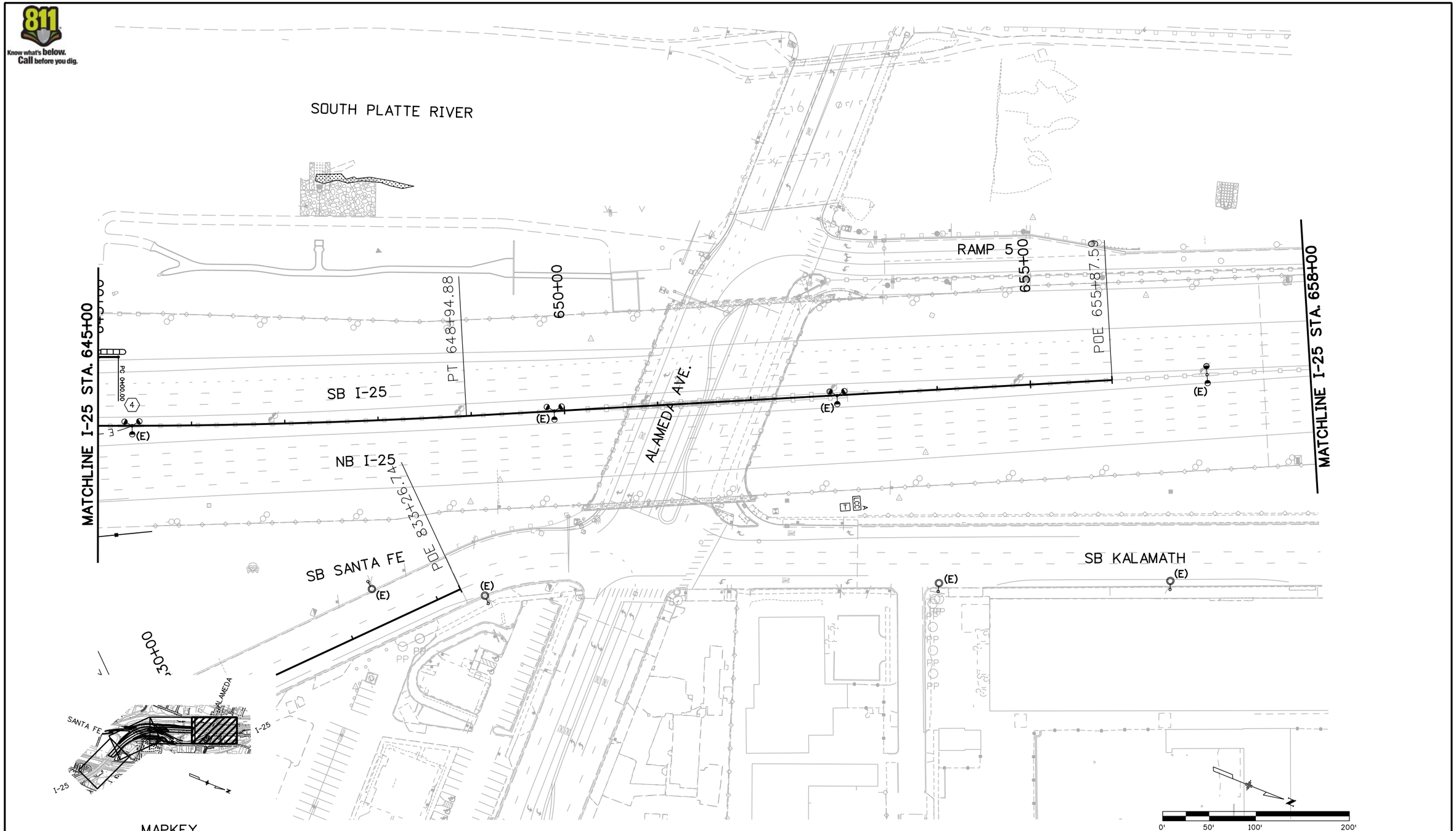

Print Date: 9/27/2010		Sheet Revisions			Colorado Department of Transportation	As Constructed
File Name: 16311LTG_PH2_I-25Plan4.dgn		Date:	Comments	Init.	2000 South Holly Street Denver, CO 80222 Phone: 303-972-9112 FAX: 303-972-9114	No Revisions:
Horiz. Scale: 1:100	Vert. Scale: As Noted					Revised:
Unit Information	Unit Leader Initials				Region 6 RLB	Void:
Scanlon Szynskie Group, Inc. 3045 S. Parker Road, Suite 225 Aurora, Co 80014-2950 303.696.2602 fax 303.696.0812	SSG PROJECT NO.: 07029.00					

I-25/SANTA FE INTERCHANGE
I-25 ROADWAY LIGHTING PLAN

Designer:	KAT	Structure Numbers	
Detailer:	ADC		
Sheet Subset:	LIGHTING	Subset Sheets:	LP-4 of 22

Project No./Code
IM 0254-394
16311
Sheet Number 453

amy 12:43:16 PM N:\FELSBURG\125 Santa Fe\elec drawings\16311\Phase 1.2 - 1.3\Lighting\Drawings\16311LTG_PH2_I-25Plan4.dgn
9/27/2010 CDOT-DefaultPrinter_XM.pltcfg CDOT-PenTable.tbl

Know what's below. Call before you dig.

SOUTH PLATTE RIVER

RAMP 4

(E)

SB SANTA FE

NB SANTA FE

MATCHLINE I-25 STA. 632+00

PT 2634+98.65

635+00

6,8 MM2

SB I-25

NB I-25

2640+00

POE 2641+46.29

PC 642+57.10

MATCHLINE I-25 STA. 645+00

PT 1634+87.41

PT 1634+76.28

LCCB-2,4 MM2

1640+00

POE 1641+43.91

LCCB-1,3 CH1

CH1

RAMP 1

SANTA FE

ALAMEDA

I-25

MAPKEY

0' 50' 100' 200'

Print Date: 9/27/2010		Sheet Revisions			Colorado Department of Transportation
File Name: 16311LTG_PH2_I-25Plan3.dgn		Date:	Comments	Init.	2000 South Holly Street, Denver, CO 80222
Horiz. Scale: 1:100 Vert. Scale: As Noted					Phone: 303-972-9112 FAX: 303-972-9114
Unit Information Unit Leader Initials					Region 6 RLB
Scanlon Szynskie Scanlon Szynskie Group, Inc. 3045 S. Parker Road, Suite 225 Aurora, Co 80014-2950 303.696.2602 fax 303.696.0812 SSG PROJECT NO.: 07029.00	0000				

As Constructed	I-25/SANTA FE INTERCHANGE			Project No./Code
No Revisions:	I-25 ROADWAY LIGHTING PLAN			IM 0254-394
Revised:	Designer: KAT	Structure Numbers		16311
Void:	Detailer: ADC			Sheet Number 454
	Sheet Subset: LIGHTING	Subset Sheets: LP-3 of 22		

army 1:38:28 PM N:\FELSBURG\125 Santa Fe\elec drawings\16311\Phase 1.2 - 1.3\Lighting\Drawings\16311LTG_PH2_I-25Plan3.dgn
9/27/2010 CDOT-DefaultPrinter_XM.pltcfg CDOT-PenTable.tbl

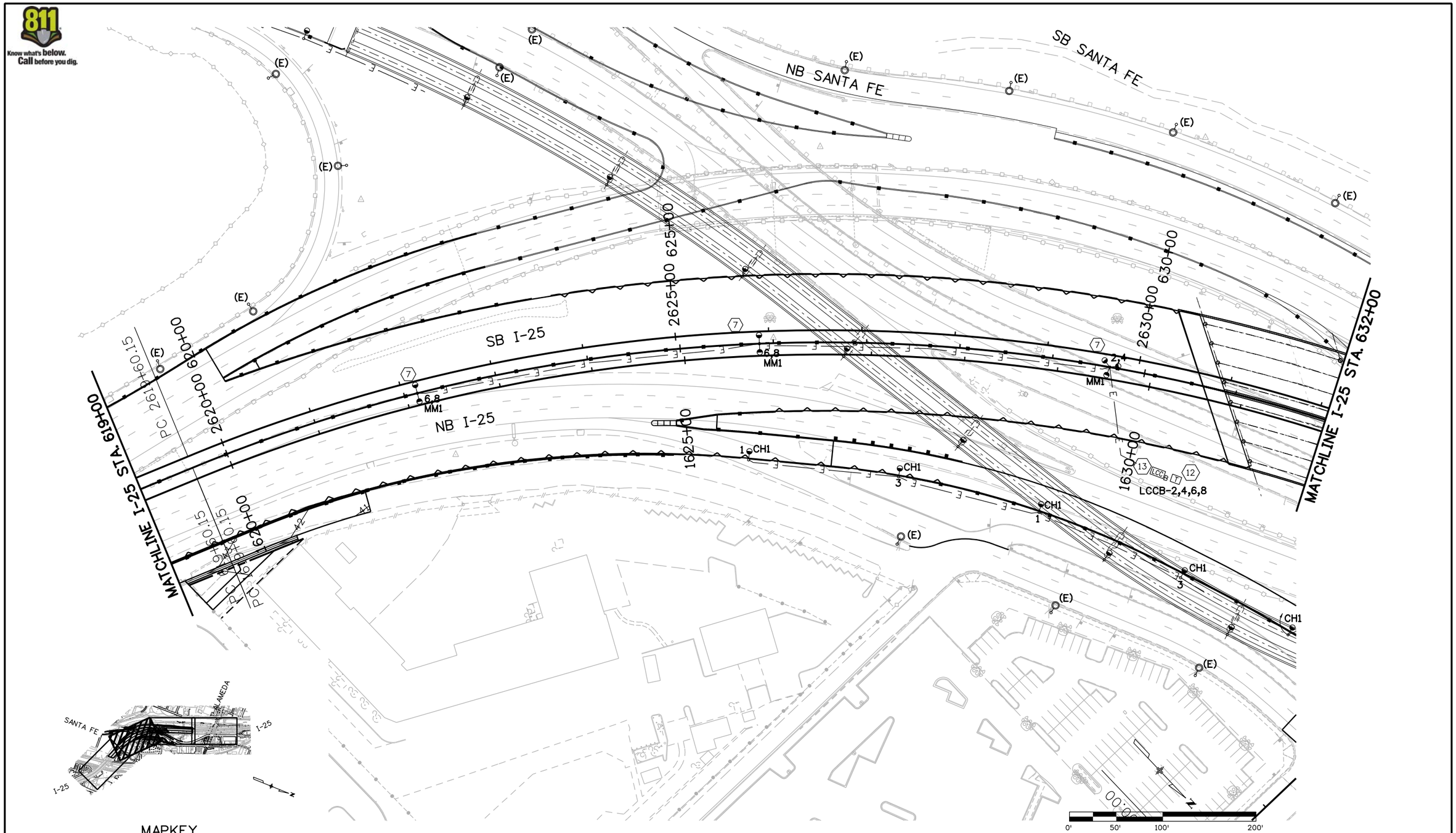

MAPKEY

Print Date: 9/27/2010		Sheet Revisions		Colorado Department of Transportation	As Constructed
File Name: 16311LTG_PH2_I-25Plan2.dgn		Date:	Comments	Init.	No Revisions:
Horiz. Scale: 1:100	Vert. Scale: As Noted				Revised:
Unit Information	Unit Leader Initials				Void:
Scanlon Szynskie Group, Inc. 3045 S. Parker Road, Suite 225 Aurora, Co 80014-2950 303.696.2602 fax 303.696.0812	SSG PROJECT NO.: 07029.00				

Colorado Department of Transportation
2000 South Holly Street
Denver, CO 80222
Phone: 303-972-9112 FAX: 303-972-9114
Region 6 RLB

I-25/SANTA FE INTERCHANGE
I-25 ROADWAY LIGHTING PLAN

Designer:	KAT	Structure Numbers	
Detailer:	ADC		
Sheet Subset:	LIGHTING	Subset Sheets:	LP-2 of 22

Project No./Code
IM 0254-394
16311
Sheet Number 455

amy 12:39:35 PM N:\FELSBURG\I25 Santa Fe\elec drawings\16311\Phase 1.2 - 1.3\Lighting\Drawings\16311LTG_PH2_I-25Plan2.dgn
9/27/2010 CDOT-DefaultPrinter_XM.pltcfg CDOT-PenTable.tbl

Know what's below. Call before you dig.

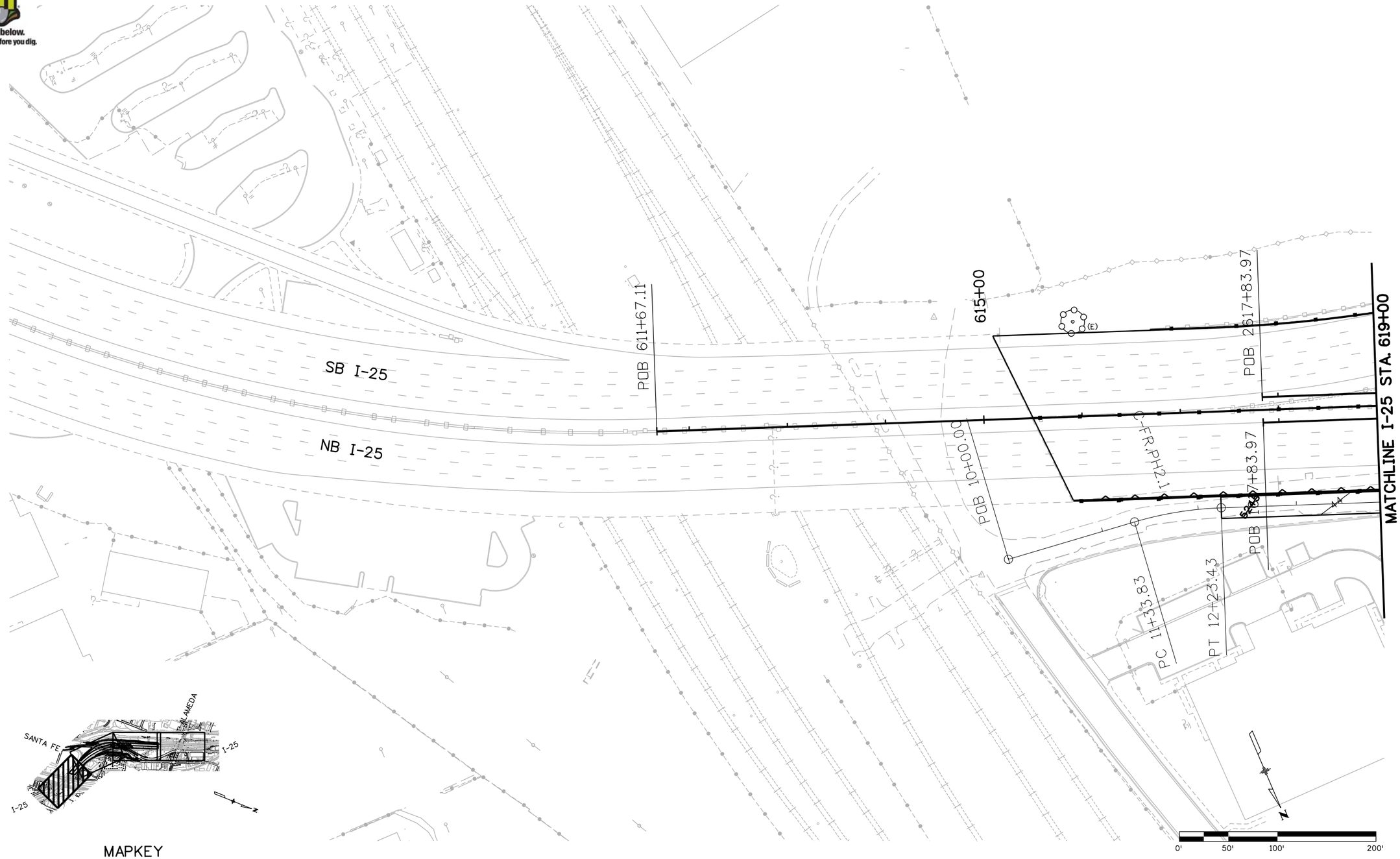

MAPKEY

Print Date: 9/27/2010	Sheet Revisions		
File Name: 16311LTG_PH2_I-25Plan1.dgn	Date:	Comments	Init.
Horiz. Scale: 1:100 Vert. Scale: As Noted			
Unit Information Unit Leader Initials			
Scanlon Szynskie Group, Inc. 3045 S. Parker Road, Suite 225 Aurora, Co 80014-2950 303.696.2602 fax 303.696.0812 SSG PROJECT NO.: 07029.00			

Colorado Department of Transportation
DEPARTMENT OF TRANSPORTATION
2000 South Holly Street
Denver, CO 80222
Phone: 303-972-9112 FAX: 303-972-9114
Region 6 RLB

As Constructed	I-25/SANTA FE INTERCHANGE I-25 ROADWAY LIGHTING PLAN			Project No./Code
No Revisions:				IM 0254-394
Revised:	Designer: KAT	Structure Numbers		16311
Void:	Detailer: ADC			
	Sheet Subset: LIGHTING	Subset Sheets: LP-1 of 22		Sheet Number 456

my 12:37:05 PM N:\FELSBURG\125 Santa Fe\elec drawings\16311\Phase 1.2 - 1.3\Lighting\Drawings\16311LTG_PH2_I-25Plan1.dgn
9/27/2010 CDOT-DefaultPrinter_XM.pltcfg CDOT-Pen Table.tbl

GENERAL NOTES

1. UTILITY LINES ARE SHOWN FOR INFORMATION ONLY. SEE UTILITY AND DRAINAGE PLANS FOR COMPLETE INFORMATION.
2. EXISTING CONDITIONS SHALL BE VERIFIED AT THE SITE PRIOR TO SUBMITTING BIDS. ALL WORK PERFORMED UNDER THIS CONTRACT SHALL CONFORM WITH THE LATEST EDITION OF THE NATIONAL ELECTRICAL CODE, AASHTO AND THE COLORADO DEPARTMENT OF TRANSPORTATION REGULATIONS AND STANDARDS.
3. ALL CONDUIT SHALL BE INSTALLED A MINIMUM OF 36" BELOW GRADE PRIOR TO PAVING. ALL CONDUIT UNDER TRAVELLED WAY AND ALL CONDUIT ELBOWS SHALL BE PVC COATED GRC. REMAINING CONDUIT SHALL BE SCHEDULE 40 PVC TYPE CONDUIT.
4. CONTRACTOR SHALL COORDINATE ALL CONDUIT RUNS AND CONSTRUCTION SEQUENCE WITH ALL TRADES AND WITH XCEL ENERGY.
5. PROVIDE PULL BOXES AND JUNCTION BOXES AS NECESSARY ACCORDING TO THE NATIONAL ELECTRICAL CODE, AASHTO REQUIREMENTS, XCEL ENERGY, AND OTHER GOVERNING AUTHORITIES. NOT ALL PULL BOXES THAT ARE REQUIRED ARE SHOWN IN PLAN. PROVIDE PULL BOXES AND JUNCTION BOXES, SIZED AS REQUIRED, TO PROVIDE A WEATHER TIGHT RACEWAY SYSTEM.
6. REFER TO THE CDOT M&S STANDARDS FOR ADDITIONAL INSTALLATION DETAILS.
7. PRIOR TO THE COMMENCEMENT OF DEMOLITION ASSOCIATED WITH THIS PROJECT, CONTRACTOR SHALL FIELD VERIFY EXISTING CONDITIONS AND THE SCOPE OF ELECTRICAL DEMOLITION WORK. REFER TO THE DEMOLITION PLANS FOR ADDITIONAL INFORMATION.
8. THE ELECTRICAL CONTRACTOR SHALL PROVIDE COMPLETE AS-BUILT PLANS OF ALL FEEDER AND BRANCH CIRCUIT LOCATIONS FOR USE BY XCEL ENERGY. DELIVER TO STEVE SMITH, 303-571-3945.
9. THE ELECTRICAL CONTRACTOR SHALL LABEL ALL JUNCTION BOXES, CONNECTION LOCATIONS, LIGHT POLES, ETC. WITH CIRCUIT INFORMATION, WHERE WIRES EXTEND TO, AND XCEL ENERGY GRID NUMBER (AS APPLICABLE).
10. THE ELECTRICAL CONTRACTOR SHALL BE RESPONSIBLE FOR PROVIDING ADEQUATE TEMPORARY LIGHTING (MAINTAIN AT LEAST 50% OF EXISTING OR NEW PERMANENT LTG) DURING ALL CONSTRUCTION PHASES OF THE PROJECT, INCLUDING BUT NOT LIMITED TO TEMPORARY DETOURS, ALIGNMENTS AND RAMPS.
11. THE ELECTRICAL CONTRACTOR SHALL BE RESPONSIBLE FOR THE REMOVAL AND RESET OF THE EXISTING LIGHTING AND REQUIRED COMPONENTS FOR A COMPLETE AND OPERATIONAL SYSTEM.
12. THE ELECTRICAL CONTRACTOR SHALL BE RESPONSIBLE FOR REMOVING ALL UNDERGROUND ELECTRICAL CONDUIT AND WIRE THAT INTERFERES WITH THE NEW ROADWAY ALIGNMENT. IF THE ELECTRICAL CONDUIT AND WIRE IS STILL REQUIRED FOR SERVICE, THE ELECTRICAL CONTRACTOR SHALL RESET OUT OF NEW ALIGNMENT. REFER TO THE UTILITY PLANS FOR ADDITIONAL INFORMATION.

DETAIL NOTES (ALL PLAN SHEETS)

1. CONNECT LUMINAIRE TO EXISTING CIRCUIT IN THIS AREA.
2. INSTALL LUMINAIRE ON BLISTER CAP THAT IS PART OF PIER FOR BRIDGE STRUCTURE. INSTALL CIRCUITRY WITHIN CONDUIT CONCEALED IN THE BRIDGE STRUCTURE.
3. INSTALL JUNCTION BOX IN MEDIAN AND ROUTE CONDUIT BELOW I-25 FOR CONNECTION TO MID-MAST AS SHOWN.
4. EXTEND CONDUIT FROM MEDIAN MOUNTED LUMINAIRE TO END OF PERMANENT BARRIER, INSTALL IN-GRADE PULL BOX AT TERMINATION LOCATION. REFER TO DETAIL ON SHEET LD-02.
5. PROVIDE AND INSTALL NEW LUMINAIRE ON TRAFFIC SIGNAL POLE. REFER TO FIXTURE SCHEDULE FOR ADDITIONAL INFORMATION. REFER TO SIGNALING PLANS FOR ADDITIONAL INFORMATION.
6. INSTALL NEW 40' POLE FOR TRAFFIC CAMERA ON BLISTER ON PIER. INSTALL CONDUIT DOWN PIER TO BELOW GRADE.
7. PROVIDE AND INSTALL NEW MEDIAN MOUNTED LUMINAIRE. REFER TO DETAIL SHEETS FOR ADDITIONAL INFORMATION.
8. RELOCATE EXISTING ELECTRICAL CONNECTION TO EXISTING ITS POLE. REFER TO CDOT ITS PLAN FOR ADDITIONAL INFORMATION.
9. COORDINATE ELECTRICAL CONNECTION TO TRAFFIC SIGNAL POLE WITH XCEL ENERGY.
10. REMOVE EXISTING LUMINAIRE. MAINTAIN EXISTING CIRCUITRY TO ALL DOWNSTREAM DEVICES. COORDINATE REMOVAL WITH XCEL ENERGY.
11. INSTALL LUMINAIRE ON NEW TRAFFIC SIGNAL POLE. COORDINATE POWER TO POLE WITH XCEL ENERGY.
12. NEW PAD MOUNTED TRANSFORMER BY XCEL ENERGY.
13. NEW LIGHTING CONTROL CABINET. REFER TO ONE-LINE DIAGRAM AND THE CDOT M&S STANDARDS FOR ADDITIONAL INFORMATION.

ELECTRICAL LEGEND

	New Light Standard With Fixture Designation
(E)	Existing Light Standard To Remain
	Existing Light Standard To Be Removed
	Existing Under-Bridge Luminaire To Be Removed
	New Under-Bridge Luminaire
	Electric Pull Box
T	Proposed Utility Company Pad Mounted transformer, 120/240V,1-PH,3W
	Weatherproof Ground Fault Circuit Interrupter 20 Amp Duplex Receptacle
	Ground Rod
	New Panelboard
— E —	New Circuit Run - Concealed
— E →→→	Home Run - Number of Arrows Indicates Number of Circuits
	Fused Disconnect Switch
	Midmast Light Standard

	Panelboard (Diagrammatic)
1	Feeder Size Callout
1	Detail Note Designation
1 / LT-##	Detail Reference Designation
R.O.W.	Right of Way
MIN.	Minimum
P.V.C.	Polyvinyl Chloride Conduit
DIA.	Diameter
U.N.O.	Unless Noted Otherwise
N.I.C.	Not in Contract

FEEDER SCHEDULE

1. (2#6 & 1#6 CU GND) 1"C.
2. (2#4 CU, 2#1 CU & 1#1 CU GND) 3"C.
3. (1) 3" CONDUIT
4. (1) 1" CONDUIT

SHEET INDEX	SHEET NO.	QUANTITY
COVER SHEET	LT-01	1
EXISTING LIGHTING PLANS	ELP-01 - ELP-04	4
I25 LIGHTING PLANS	LP-01 - LP-04	4
SANTA FE LIGHTING PLANS	SFLP-01 - SFLP-04	4
RAMP 1 LIGHTING PLANS	RLP-01 - RLP-03	3
LIGHTING DETAILS	LD-01 - LD-04	4
LIGHTING TABULATION	LT-01 - LT-02	2

Print Date: 9/27/2010
File Name: 16311LTG_PH2_COVERLT-01.dgn
Horiz. Scale: 1:100 Vert. Scale: As Noted
Unit Information Unit Leader Initials

Scanlon Szynskie Group, Inc.
3045 S. Parker Road, Suite 225
Aurora, Co 80014-2950
303.696.2602 fax 303.696.0812
SSG PROJECT NO.: 07029.00

Sheet Revisions

Date:	Comments	Init.

Colorado Department of Transportation
2000 South Holly Street
Denver, CO 80222
Phone: 303-972-9112 FAX: 303-972-9114
Region 6 RLB

As Constructed
No Revisions:
Revised:
Void:

I-25/SANTA FE INTERCHANGE
ELECTRICAL LEGEND AND NOTES

Designer: KAT
Detailer: ADC
Sheet Subset: LTG
Structure Numbers:
Subset Sheets: LT-01 of 22

Project No./Code
IM 0254-394
16311
Sheet Number 457

army 1:33:14 PM N:\FELSBURG\125 Santa Fe\elec drawings\16311\Phase 1.2 - 1.3\Lighting\Drawings\16311LTG_PH2_COVERLT-01.dgn
9/27/2010 CDOT-DefaultPrinter_XM.pltcfg CDOT-PenTable.tbl

TABULATION OF QUANTITIES

STATION / LOCATION	ELECTRICAL CONNECTION ITS POLE Pay Item #	ELECTRICAL CONNECTION TRAFFIC SIGNAL POLE Pay item #	REMOVAL OF LUMINAIRE (UNDERBRIDGE) Pay Item # 202-00750	REMOVAL OF LUMINAIRE (TRAFFIC) Pay Item # 202-00750	REMOVAL OF LIGHT STANDARD Pay Item # 202-00700	TEMPORARY LIGHTING LIGHT STANDARD 40' ROUND STEEL GALV. POLE Pay Item # 613-32400	TEMPORARY LIGHTING TRANSFORMER BASE Pay Item # 613-50365	TEMPORARY LIGHTING FOUNDATION Pay Item # 613-40010	TEMPORARY LUMINAIRE 250W HPS COBRA HEAD Pay Item # 613-70250	TEMPORARY LIGHTING RESET Pay Item # 210-00750	TEMPORARY LIGHT STANDARD FOUNDATION RESET Pay Item # 613-40010	2 INCH ELECTRICAL CONDUIT (FOR RESET) Pay Item # 613-00100
	EA	EA	EA	EA	EA	EA	EA	EA	EA	EA	EA	LIN FT
I-25 NB			2		17	20	20	20	20	10	10	5000
I-25 SB			0		14	20	20	20	20	10	10	5000
I-25	1		0		0							
SANTA FE - NB			0		9	15	15	15	15	8	8	3750
SANTA FE - SB			0		9	15	15	15	15	8	8	3750
HOME DEPOT ROAD		2	0		0	5	5	5	5	5	5	1250
RAMP 1	1		0		2	5	5	5	5	5	5	1250
MISC												
TOTALS	2	2	2	0	51	80	80	80	80	46	46	20000

TEMPORARY LIGHTING NOTES:

1 THE USE OF EXISTING LIGHT STANDARDS AND LUMINAIRES THAT ARE BEING REMOVED AS THE TEMPORARY LIGHT SOURCE IS NOT PERMITTED BY CDOT OR XCEL ENERGY.
2 THE ELECTRICAL CONTRACTOR SHALL PROVIDE NEW LIGHT STANDARDS, FOUNDATIONS, AND LUMINAIRES FOR USE AS TEMPORARY LIGHT STANDARDS.
3 AT ALL TIMES, THE CONTRACTOR SHALL MAINTAIN CONTINUOUS LIGHTING OVER THE CURRENT PHASE OF WORK. AT NO TIME CAN (2) ADJACENT LIGHTS BE OUT AT THE SAME TIME. ADDITIONAL TEMPORARY LIGHTING SHALL BE PROVIDED FOR ALL DETOURS, LANE SHIFTS, ETC. TO HELP THE PUBLIC NAVIGATE THE DETOUR. THE INTENT OF THE TEMPORARY LIGHTING IS THAT NO AREA OF WORK SHALL BE LEFT WITHOUT LIGHTING DURING CONSTRUCTION.
4 THE CONTRACTOR SHALL BE ALLOWED TO UTILIZE THE NEW "TEMPORARY" LIGHT STANDARDS PROVIDED AS PART OF THIS PROJECT THROUGHOUT THE 9 CONSTRUCTION PHASES.
5 XCEL ENERGY REQUIRES A MINIMUM 2"C. FOR ALL TEMPORARY LIGHTING BRANCH CIRCUITS AND FEEDERS.
6 THE ELECTRICAL CONTRACTOR SHALL BE RESPONSIBLE FOR DESIGNING THE TEMPORARY LIGHTING SCHEMES REQUIRED FOR THIS PROJECT. TEMPORARY LIGHTING SCHEMES SHALL BE APPROVED PRIOR TO IMPLEMENTATION.

Print Date: 9/27/2010
File Name: 16311LTG_LT-2.dgn
Horiz. Scale: 1:100 Vert. Scale: As Noted
Unit Information Unit Leader Initials

Scanlon Szynskie Group, Inc.
3045 S. Parker Road, Suite 225
Aurora, Co 80014-2950
303.696.2602 fax 303.696.0812
SSG PROJECT NO.: 07029.00

Sheet Revisions

Date:	Comments	Init.

Colorado Department of Transportation
2000 South Holly Street
Denver, CO 80222
Phone: 303-972-9112 FAX: 303-972-9114
Region 6 RLB

As Constructed
No Revisions:
Revised:
Void:

I-25/SANTA FE INTERCHANGE
ELECTRICAL ONE-LINE DIAGRAMS AND DETAILS

Designer: KAT
Detailer: ADC
Sheet Subset: LTG
Structure Numbers:
Subset Sheets: LT-2 of 22

Project No./Code
IM 0254-394
16311
Sheet Number 458

amy 1:33:43 PM N:\FELSBURG\125 Santa Fe\elec drawings\16311\Phase 1.2 - 1.3\Lighting\Drawings\16311LTG_LT-2.dgn
9/27/2010 CDOT-DefaultPrinter_XM.pltcfg CDOT-PenTable.tbl

TABULATION OF QUANTITIES

STATION / LOCATION	LUMINAIRE HIGH PRESSURE SODIUM (400W) CURVILINEAR Type "HP2" Pay Item # 613-70400	LUMINAIRE HIGH PRESSURE SODIUM (250W) CURVILINEAR Type "HP1" Pay Item # 613-70250	LUMINAIRE HIGH PRESSURE SODIUM (250W) COBRA HEAD Type "CH1" Pay Item # 613-70250	UNDERBRIDGE LUMINAIRE 150W HPS Type "WP2" Pay Item # 613-72150	UNDERBRIDGE LUMINAIRE MOUNTING BRACKET Pay Item #	MID MAST LUMINAIRE 1000W HPS Type "MM1" & "MM2" Pay Item # 613-71000	LIGHT STD STEEL 8' MAST ARM Pay Item #	LIGHT STD FOUNDATION Pay Item # 613-40010	TRANSFORMER BASE Pay Item # 613-50365	LIGHT STD FOUNDATION CAISSON Pay Item # 503-00030	MID MAST ROUND STEEL POLE 65 FOOT Pay Item # 613-34700	LIGHT STD 40' ROUND STEEL GALV. POLE Pay Item # 613-32400	LIGHTING CONTROL CABINET 200A2P Pay Item # 613-50100	2 INCH ELECTRICAL CONDUIT Pay Item # 613-00100	3 INCH ELECTRICAL CONDUIT Pay Item # 613-00300	ELECTRICAL WIRING Pay Item # 613-10000
	EA	EA	EA			EA	EA	EA	EA	LF	EA	EA	EA	LIN FT	LIN. FT	LUMP SUM
I-25 NB						3				12	1				750	
I-25 SB						3				12	1				750	
I-25						10				48	4		1		2000	
SANTA FE - NB		9		3	3			9	9			9		2000		
SANTA FE - SB		10		3	3			10	10			10		1800		
HOME DEPOT ROAD	3		5				8	5	5			5		800		
RAMP 1			19	12	12		19	19	19			19		6500		
MISC																
ELECTRICAL WIRING																
TOTALS	3	19	24	18	18	16	27	43	43	72	6	43	1	11100	3500	1

Print Date: 9/27/2010
File Name: 16311LTG_LT-1.dgn
Horiz. Scale: 1:100 Vert. Scale: As Noted
Unit Information Unit Leader Initials

Scanlon Szynskie Group, Inc.
3045 S. Parker Road, Suite 225
Aurora, Co 80014-2950
303.696.2602 fax 303.696.0812
SSG PROJECT NO.: 07029.00

Sheet Revisions		
Date:	Comments	Init.

Colorado Department of Transportation
2000 South Holly Street
Denver, CO 80222
Phone: 303-972-9112 FAX: 303-972-9114
Region 6 RLB

As Constructed
No Revisions:
Revised:
Void:

I-25/SANTA FE INTERCHANGE
ELECTRICAL TABULATIONS

Designer: KAT
Detailer: ADC
Sheet Subset: LTG
Structure Numbers
Subset Sheets: LT-1 of 22

Project No./Code
IM 0254-394
16311
Sheet Number 459

amy 1:34:09 PM N:\FELSBURG\125 Santa Fe\elec drawings\16311\Phase 1.2 - 1.3\Lighting\Drawings\16311LTG_LT-1.dgn
9/27/2010 CDOT-DefaultPrinter_XM.pltcfg CDOT-PenTable.tbl

LUMINAIRE SCHEDULE

KEY	IMAGE	DESCRIPTION	MANUFACTURER	CATALOG NUMBER	FINISH	MOUNTING	LAMPS QTY	LAMPS TYPE	VOLT	INPUT WATTS	SCH NOTES
HP1	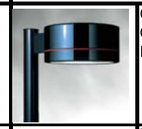	CURVILINEAR LUMINAIRE ON 40' GALVANIZED ROUND STEEL POLE, TYPE III DISTRIBUTION	XCEL STANDARD OFFERING	CURVILINEAR - XCEL #	FEDERAL GREEN	40' POLE	1	250 HPS	120	275	
WP2		XCEL ENERGY PENDANT MOUNTED FLOODLIGHT WITH VALMONT MOUNTING BRACKET	XCEL STANDARD OFFERING	XCEL CAT # XC53993	BRONZE	UNDERDECK	1	150W HPS	120	175	
MM1		MEDIAN MOUNTED (2) HEAD MID MAST LUMINAIRE WITH ROUND STEEL POLE	HOLOPHANE	LUMINAIRE - HMSP- C10HP-24-S-9 POLE - 65' ROUND TAPERED STEEL	GRAY	65' POLE	2	1000W HPS	240	2250	
MM2		MEDIAN MOUNTED (3) HEAD MID MAST LUMINAIRE WITH ROUND STEEL POLE	HOLOPHANE	LUMINAIRE - HMSP- C10HP-24-S-9 POLE - 65' ROUND TAPERED STEEL	GRAY	65' POLE	3	1000W HPS	240	3375	
CH1		COBRA HEAD STYLE LUMINAIRE ON A 40' ROUND TAPERED STEEL GALVANIZED POLE	XCEL STANDARD OFFERING		GRAY	40' POLE, 8' MAST ARM	1	250W HPS	120	275	
HP2	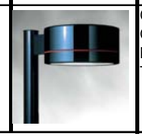	CURVILINEAR LUMINAIRE ON 35' GALVANIZED POLE WITH 8'-0" MAST ARM INSTALLED ON TRAFFIC SIGNAL	XCEL STANDARD OFFERING		FEDERAL GREEN	35' TRAFFIC SIGNAL POLE	1	400W HPS	120	425	

amy 1:34:43 PM N:\FELSBURG\125 Santa Fe\elec drawings\16311\Phase 1.2 - 1.3\Lighting\Drawings\16311LTG_LD-4.dgn
9/27/2010 CDOT-DefaultPrinter_XM.pltcfg CDOT-PenTable.tbl

Print Date: 9/27/2010
File Name: 16311LTG_LD-4.dgn
Horiz. Scale: 1:100 Vert. Scale: As Noted
Unit Information Unit Leader Initials

Scanlon Szynskie Group, Inc.
3045 S. Parker Road, Suite 225
Aurora, Co 80014-2950
303.696.2602 fax 303.696.0812
SSG PROJECT NO.: 07029.00

Sheet Revisions		
Date:	Comments	Init.

Colorado Department of Transportation
2000 South Holly Street
Denver, CO 80222
Phone: 303-972-9112 FAX: 303-972-9114
Region 6 RLB

As Constructed
No Revisions:
Revised:
Void:

I-25/SANTA FE INTERCHANGE
ELECTRICAL SCHEDULES

Designer: KAT
Detailer: ADC
Sheet Subset: LTG
Structure Numbers:
Subset Sheets: LD-4 of 22

Project No./Code
IM 0254-394
16311
Sheet Number 460

EXISTING PANEL "A"

VOLTS: 240/120V,1PH,3W
MAINS: 125A M.L.O.
A.I.C.: 22KA

MTG: NEMA 3R SURFACE
MFGR: CH/ITE/SQD/GE
TYPE: BOLT-ON

DESCRIPTION	T	KVA	BKR	CKT#			BKR	KVA	T	DESCRIPTION
MID MAST LIGHTING	L	2.88	30A	1	•	2	30A	2.88	L	MID MAST LIGHTING
-	L	2.88	2P	3	•	4	2P	2.88	L	-
FUTURE MID MAST LG	L	2.30	30A	5	•	6	30A	2.30	L	NEW MID MAST LG
-	L	2.30	2P	7	•	8	2P	2.30	L	-
UNDER BRIDGE LTG	L	1.38	20A1P	9	•	10	20A1P	0.18	R	GFCI RECEP
SPACE				11	•	12				SPACE

LOAD KVA	LTG	REC	TOTAL
CONNECTED	22.1	0.2	22.3
NEC DEMAND	27.6	0.2	27.8
AMPS			116

PHASE KVA A = 11.9 B = 10.4
PHASE IMBALANCE (%) A/B = 15.1

NEW PANEL "B"

VOLTS: 240/120V,1PH,3W
MAINS: 200A M.L.O.
A.I.C.: 22KA

MTG: NEMA 3R SURFACE
MFGR: CH/OTE/SQD/GE
TYPE: BOLT-ON

DESCRIPTION	T	KVA	BKR	CKT#			BKR	KVA	T	DESCRIPTION
HOME DEPOT LTG	L	1.10	20A1P	1	•	2	40A	3.45	L	MID MAST LTG
HOME DEPOT LTG	L	0.82	20A1P	3	•	4	2P	3.45	L	-
UNDERBRIDGE LTG	L	1.23	20A1P	5	•	6	30A	2.50	L	MID MAST LTG
UNDERBRIDGE LTG	L	0.88	20A1P	7	•	8	2P	2.50	L	-
RAMP 1 LTG	L	1.38	20A1P	9	•	10	20A1P	1.65	L	RAMP 1 LTG
RAMP 1 LTG	L	1.10	20A1P	11	•	12	20A1P	1.65	L	RAMP 1 LTG
ITS POLE	O	0.50	20A1P	13	•	14				SPACE
SPACE				15	•	16				SPACE
SPACE				17	•	18				SPACE
SPACE				19	•	20				SPACE
SPACE				21	•	22				SPACE
SPACE				23	•	24				SPACE

LOAD KVA	LTG	OTHR	TOTAL
CONNECTED	21.7	0.5	22.2
NEC DEMAND	27.1	0.5	27.6
AMPS			115

PHASE KVA A = 11.8 B = 10.4
PHASE IMBALANCE (%) A/B = 13.5

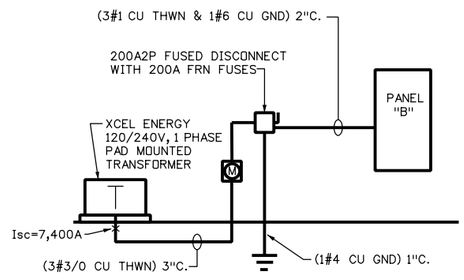

1 LIGHTING CONTROL CENTER "B" ONE-LINE DIAGRAM
NOT TO SCALE

army 1:35:03 PM N:\FELSBURG\125 Santa Fe\elec drawings\16311\Phase 1.2 - 1.3\Lighting\Drawings\16311LTG_LD-3.dgn
9/27/2010 CDOT-DefaultPrinter_XM.pltcfg CDOT-PenTable.tbl

Print Date: 9/27/2010
File Name: 16311LTG_LD-3.dgn
Horiz. Scale: 1:100 Vert. Scale: As Noted
Unit Information Unit Leader Initials

Scanlon Szynskie Group, Inc.
3045 S. Parker Road, Suite 225
Aurora, Co 80014-2950
303.696.2602 fax 303.696.0812
SSG PROJECT NO.: 07029.00

Sheet Revisions

Date:	Comments	Init.

Colorado Department of Transportation
2000 South Holly Street
Denver, CO 80222
Phone: 303-972-9112 FAX: 303-972-9114
Region 6 RLB

As Constructed
No Revisions:
Revised:
Void:

I-25/SANTA FE INTERCHANGE
ELECTRICAL ONE-LINE DIAGRAMS
AND DETAILS

Designer: KAT
Detailer: ADC
Sheet Subset: LTG
Structure Numbers:
Subset Sheets: LD-3 of 22

Project No./Code
IM 0254-394
16311
Sheet Number 461

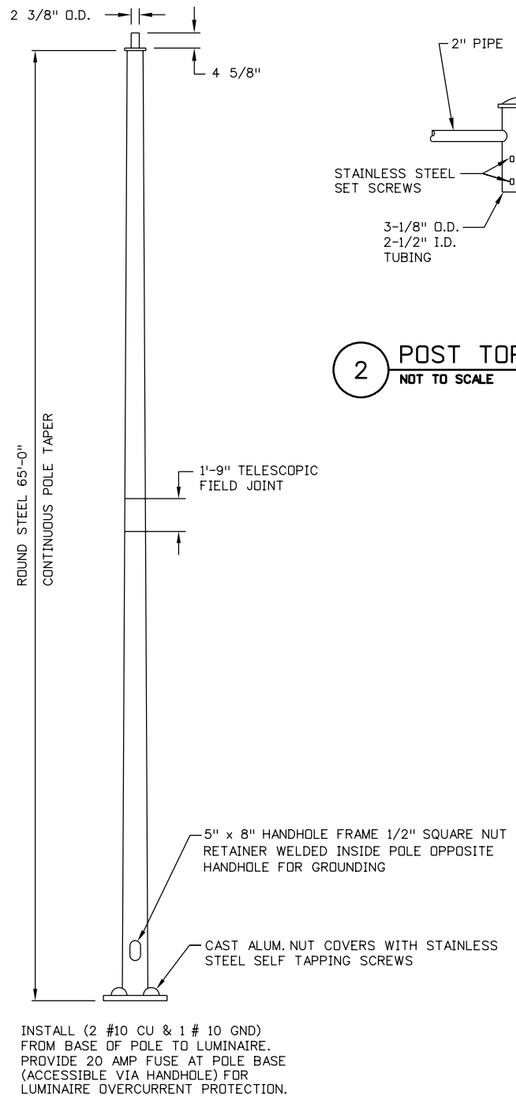

1 MID-MAST POLE DETAIL
NOT TO SCALE

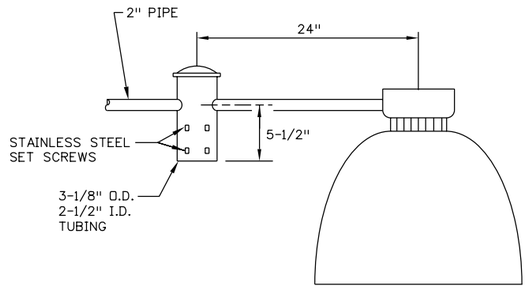

2 POST TOP DETAIL
NOT TO SCALE

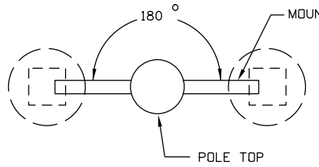

MID-MAST TYPE "MM1"
(2) LUMINAIRE ARRANGEMENT

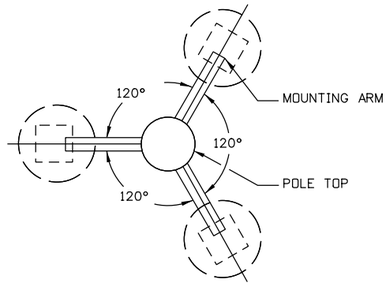

MID-MAST TYPE "MM2"
(3) LUMINAIRE ARRANGEMENT

3 MID-MAST DETAIL
NOT TO SCALE

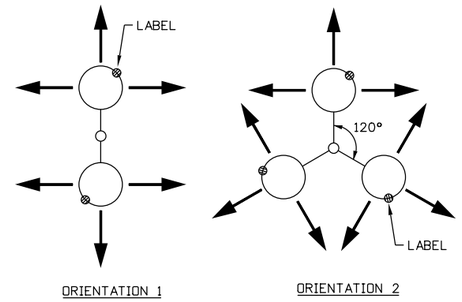

ORIENTATION 1 ORIENTATION 2

MID-MAST LUMINAIRE ORIENTATION
NOTE: ARROWS ON LUMINIARE SYMBOL
INDICATE PEAK LIGHT DISTRIBUTION.

4 MID-MAST LUMINAIRE ORIENTATION DETAIL
NOT TO SCALE

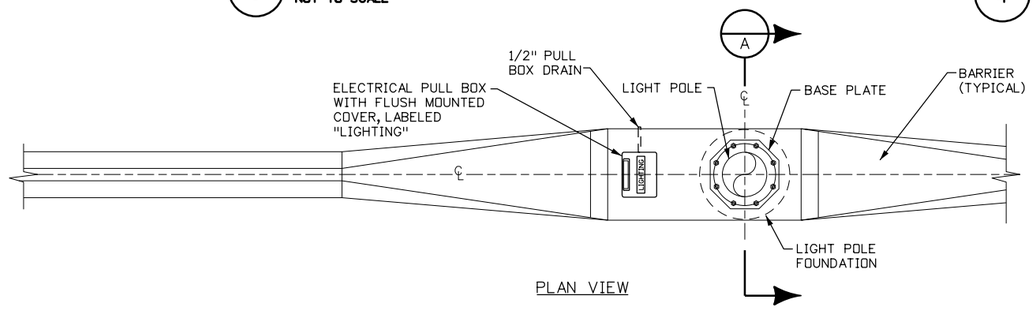

PLAN VIEW

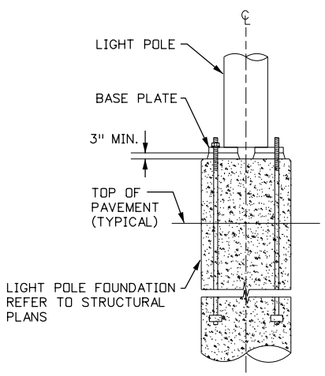

SECTION A

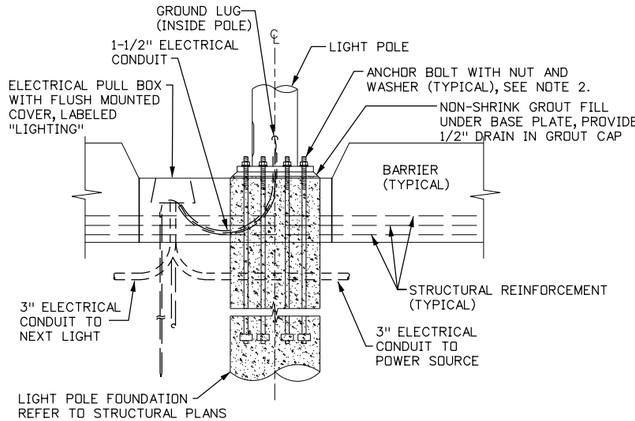

ELEVATION

5 MID-MAST POLE AT BARRIER DETAIL
NOT TO SCALE

NOTES:

1. FOUNDATION BOLT PATTERN IS SCHEMATIC. REFER TO M&S STANDARD PLANS FOR BOLT PATTERNS AND REINFORCEMENT LAYOUT.
2. NUTS AND WASHERS TO BE PLACED TOP AND BOTTOM OF BASE PLATE TO ALLOW FOR ADJUSTMENT.
3. ALL REINFORCEMENT SHALL BE EPOXY COATED PER STANDARD SPECIFICATIONS.
4. ALL REINFORCING STEEL SHALL HAVE 2" MIN. COVER.
5. INFORMATION NOT SHOWN SHALL BE PER CDOT M&S STANDARD PLANS FOR GUARDRAIL.
6. CONDUIT ROUTING SHOWN IS SCHEMATIC.

amy 1:35:27 PM N:\FELSBURG\125 Santa Fe\elec drawings\16311\Phase 1.2 - 1.3\Lighting\Drawings\16311LTG_LD-2.dgn
9/27/2010 CDOT-DefaultPrinter_XM.pltcfg CDOT-Pen table.tbl

Print Date: 9/27/2010		Sheet Revisions	
File Name: 16311LTG_LD-2.dgn		Date: / Comments / Init.	
Horiz. Scale: 1:100 Vert. Scale: As Noted			
Unit Information Unit Leader Initials			
Scanlon Szynskie Group, Inc. 3045 S. Parker Road, Suite 225 Aurora, Co 80014-2950 303.696.2602 fax 303.696.0812 SSG PROJECT NO.: 07029.00			

Colorado Department of Transportation
2000 South Holly Street
Denver, CO 80222
Phone: 303-972-9112 FAX: 303-972-9114
Region 6 RLB

As Constructed
No Revisions:
Revised:
Void:

I-25/SANTA FE INTERCHANGE
ELECTRICAL DETAILS

Designer:	KAT	Structure Numbers	
Detailer:	ADC		
Sheet Subset:	LTG	Subset Sheets:	LD-2 of 22

Project No./Code
IM 0254-394
16311
Sheet Number 462

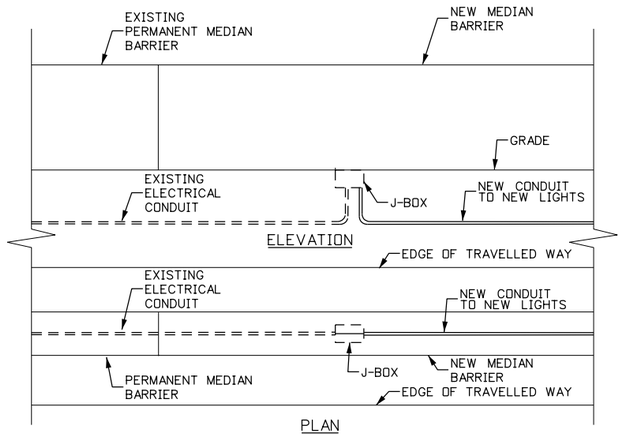

1 MEDIAN CONDUIT EXTENSION DETAIL
NOT TO SCALE

amy 1:35:48 PM N:\FELSBURG\125 Santa Fe\elec drawings\16311\Phase 1.2 - 1.3\Lighting\Drawings\16311LTG_LD-1.dgn
9/27/2010 CDOT-DefaultPrinter_XM.pltcfg CDOT-Pen Table.tbl

Print Date: 9/27/2010
File Name: 16311LTG_LD-1.dgn
Horiz. Scale: 1:100 Vert. Scale: As Noted
Unit Information Unit Leader Initials

Scanlon Szynskie Group, Inc.
3045 S. Parker Road, Suite 225
Aurora, Co 80014-2950
303.696.2602 fax 303.696.0812
SSG PROJECT NO.: 07029.00

Sheet Revisions

Date:	Comments	Init.

Colorado Department of Transportation
2000 South Holly Street
Denver, CO 80222
Phone: 303-972-9112 FAX: 303-972-9114
Region 6 RLB

As Constructed
No Revisions:
Revised:
Void:

I-25/SANTA FE INTERCHANGE
ELECTRICAL DETAILS
AND DIAGRAMS

Designer: KAT
Detailer: ADC
Sheet Subset: LTG
Structure Numbers:
Subset Sheets: LD-1 of 22

Project No./Code
IM 0254-394
16311
Sheet Number 463

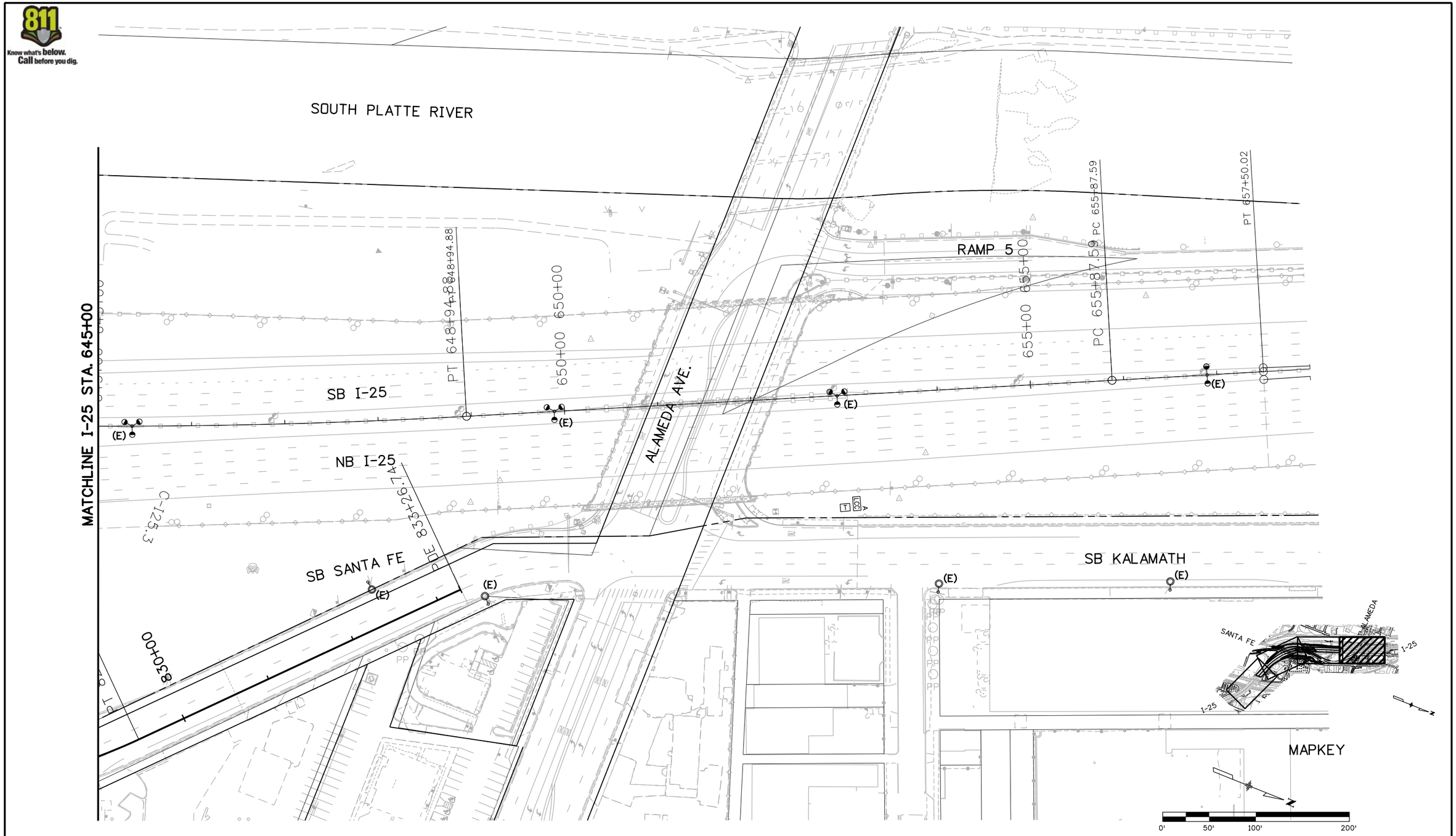

Print Date: 9/27/2010		Sheet Revisions		Colorado Department of Transportation	As Constructed	I-25/SANTA FE INTERCHANGE
File Name: 16311EXSTLTG_PH2_ELP-4.dgn		Date:	Comments	Init.	No Revisions:	EXISTING ROADWAY LIGHTING PLAN
Horiz. Scale: 1:100	Vert. Scale: As Noted				Revised:	Designer: KAT / Structure Numbers
Unit Information	Unit Leader Initials				Void:	Detailer: ADC
Scanlon Szynskie Group, Inc. 3045 S. Parker Road, Suite 225 Aurora, Co 80014-2950 303.696.2602 fax 303.696.0812	SSG PROJECT NO.: 07029.00					Sheet Subset: LIGHTING / Subset Sheets: ELP-4 of 22

Colorado Department of Transportation
2000 South Holly Street
Denver, CO 80222
Phone: 303-972-9112 FAX: 303-972-9114
Region 6 RLB

Project No./Code
IM 0254-394
16311
Sheet Number 464

amy 12:35:10 PM N:\FELSBURG\I25 Santa Fe\elec drawings\16311\Phase 1.2 - 1.3\Lighting\Drawings\16311EXSTLTG_PH2_ELP-4.dgn
9/27/2010 CDOT-DefaultPrinter_XM.pltcfg CDOT-PenTable.tbl

Know what's below. Call before you dig.

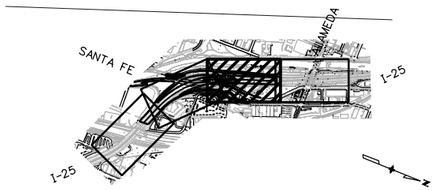

SOUTH PLATTE RIVER

RAMP 4

POB 1632+00.10 (SB I-25)

PI 1633+59.43

PI 1635+01.45

1635+00

PC 1636+30.82

SB SANTA FE

NB SANTA FE

SB I-25

1640+00

PC 644+75.00

MATCHLINE I-25 STA. 632+00

NB I-25

MATCHLINE I-25 STA. 645+00

2640+00

RAMP 1

PC 2641+95.78

POB 2636+62.41 (NB I-25)

(E)

0' 50' 100' 200'

amy 12:33:33 PM N:\FELSBURG\125 Santa Fe\elec drawings\16311\Phase 1.2 - 1.3\Lighting\Drawings\16311EXSTLTG_PH2_ELP-3.dgn
9/27/2010 CDOT-DefaultPrinter_XM.pltcfg CDOT-PenTable.tbl

Print Date: 9/27/2010	Sheet Revisions			Colorado Department of Transportation	As Constructed
File Name: 16311EXSTLTG_PH2_ELP-3.dgn	Date:	Comments	Init.	2000 South Holly Street	No Revisions:
Horiz. Scale: 1:100 Vert. Scale: As Noted				Denver, CO 80222	Revised:
Unit Information Unit Leader Initials				Phone: 303-972-9112 FAX: 303-972-9114	Void:
Scanlon Szynskie Scanlon Szynskie Group, Inc. 3045 S. Parker Road, Suite 225 Aurora, Co 80014-2950 303.696.2602 fax 303.696.0812 SSG PROJECT NO.: 07029.00				Region 6 RLB	

I-25/SANTA FE INTERCHANGE EXISTING ROADWAY LIGHTING PLAN			Project No./Code
Designer: KAT	Structure Numbers		IM 0254-394
Detailer: ADC			16311
Sheet Subset: LIGHTING	Subset Sheets: ELP-3 of 22		Sheet Number 465

Know what's below. Call before you dig.

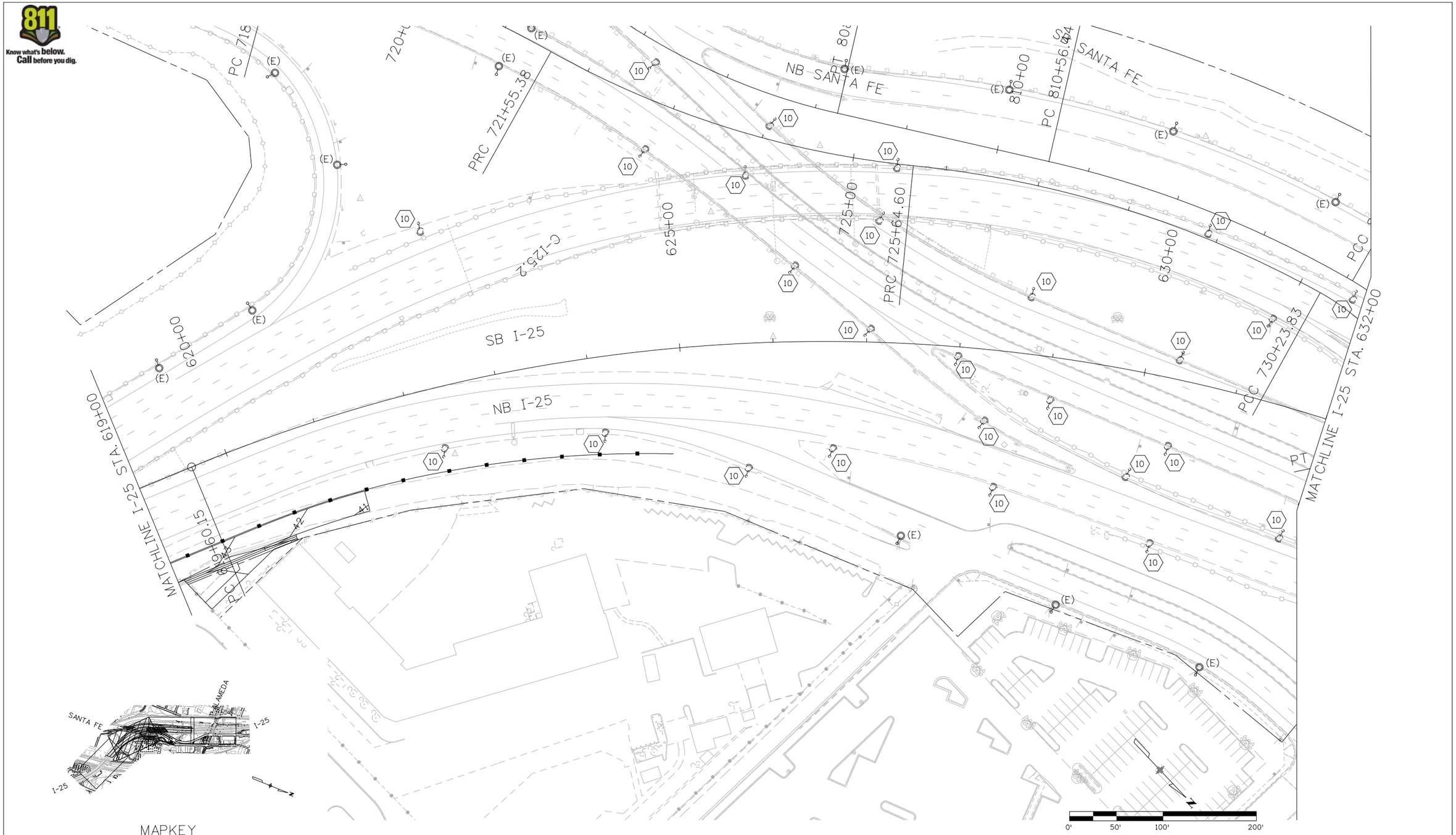

MAPKEY

0' 50' 100' 200'

Print Date: 9/27/2010		Sheet Revisions			Colorado Department of Transportation
File Name: 16311EXSTLTG_PH2_ELP-2.dgn		Date:	Comments	Init.	2000 South Holly Street Denver, CO 80222 Phone: 303-972-9112 FAX: 303-972-9114
Horiz. Scale: 1:100 Vert. Scale: As Noted					Region 6 RLB
Unit Information Unit Leader Initials					
Scanlon Szynskie Group, Inc. 3045 S. Parker Road, Suite 225 Aurora, Co 80014-2950 303.696.2602 fax 303.696.0812 SSG PROJECT NO.: 07029.00					

As Constructed	I-25/SANTA FE INTERCHANGE			Project No./Code
No Revisions:	EXISTING ROADWAY LIGHTING PLAN			IM 0254-394
Revised:	Designer: KAT	Structure Numbers		16311
Void:	Detailer: ADC			Sheet Number 466
	Sheet Subset: LIGHTING	Subset Sheets: ELP-2 of 22		

amy 12:32:15 PM N:\FELSBURG\125 Santa Fe\elec drawings\1631\Phase 1.2 - 1.3\Lighting\Drawings\16311EXSTLTG_PH2_ELP-2.dgn
9/27/2010 CDOT-DefaultPrinter_XM.pltcfg CDOT-Pen Table.tbl

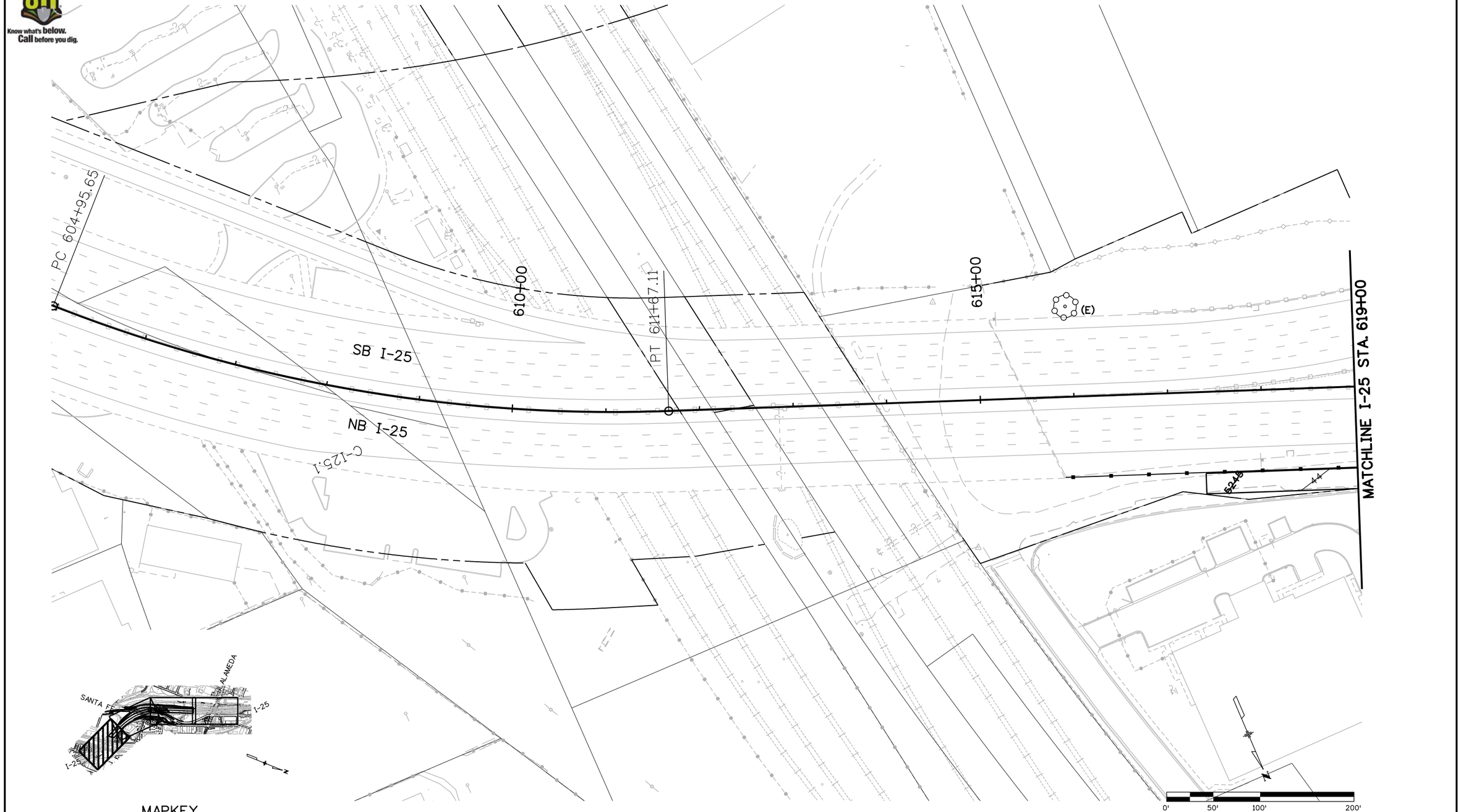

MAPKEY

Print Date: 9/27/2010		Sheet Revisions		Colorado Department of Transportation	As Constructed
File Name: 16311EXSTLTG_PH2_ELP-1.dgn		Date:	Comments	Init.	No Revisions:
Horiz. Scale: 1:100	Vert. Scale: As Noted				Revised:
Unit Information	Unit Leader Initials				Void:
Scanlon Szynskie Group, Inc. 3045 S. Parker Road, Suite 225 Aurora, Co 80014-2950 303.696.2602 fax 303.696.0812	SSG PROJECT NO.: 07029.00				

Colorado Department of Transportation
2000 South Holly Street
Denver, CO 80222
Phone: 303-972-9112 FAX: 303-972-9114
Region 6 RLB

I-25/SANTA FE INTERCHANGE
EXISTING ROADWAY LIGHTING PLAN

Designer:	KAT	Structure Numbers	
Detailer:	ADC		
Sheet Subset:	LIGHTING	Subset Sheets: ELP-1 of 22	

Project No./Code
IM 0254-394
16311
Sheet Number 467

amy 1:32:42 PM N:\FELSBURG\I25 Santa Fe\elec drawings\16311\Phase 1.2 - 1.3\Lighting\Drawings\16311EXSTLTG_PH2_ELP-1.dgn
9/27/2010 CDOT-DefaultPrinter_XM.pltcfg CDOT-PenTable.tbl

Know what's below. Call before you dig.

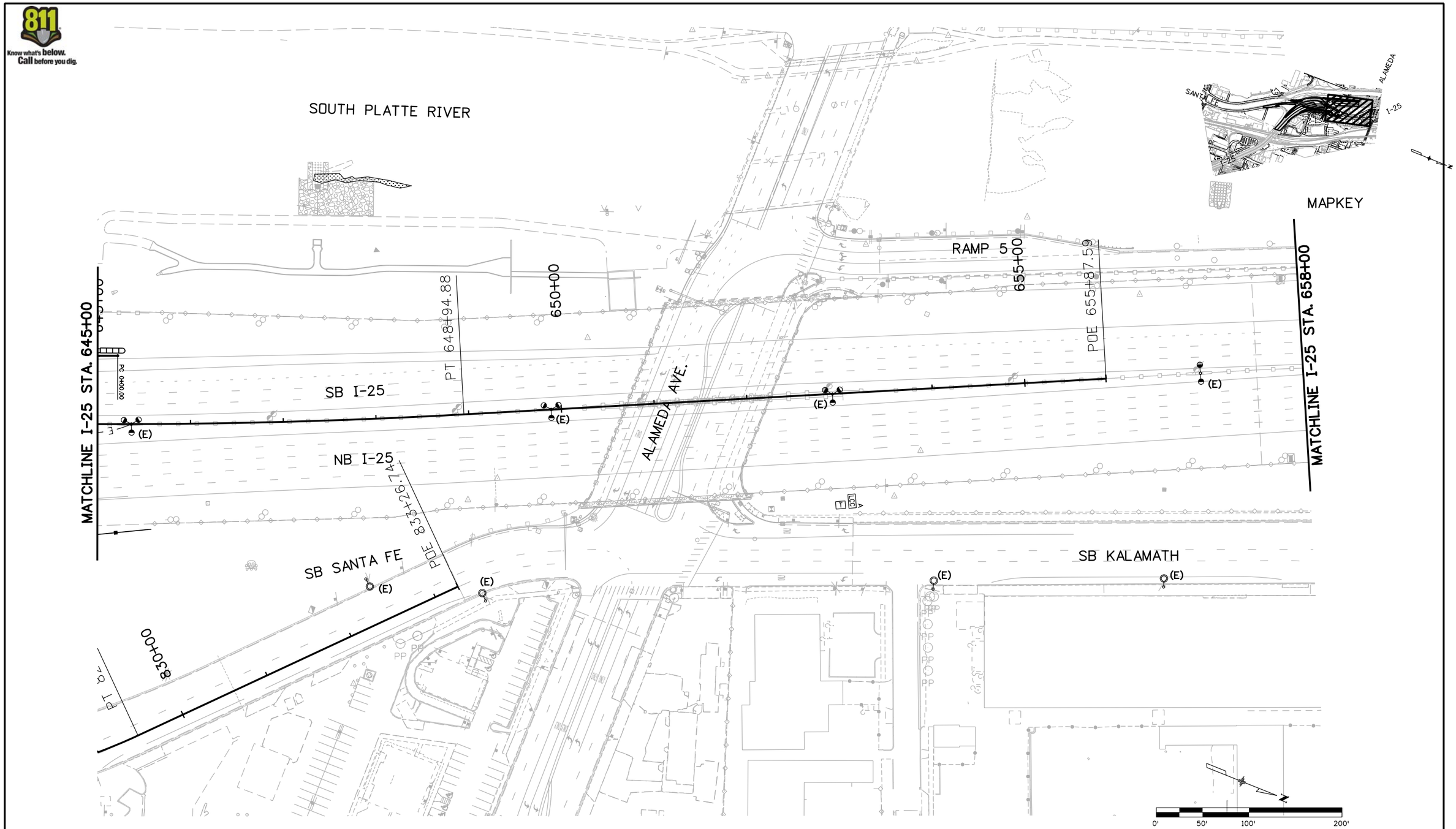

Print Date: 9/27/2010	Sheet Revisions	Colorado Department of Transportation	As Constructed
File Name: 16311LTG_PH2_SFLP-4.dgn	Date: / Comments / Init.	2000 South Holly Street Denver, CO 80222 Phone: 303-972-9112 FAX: 303-972-9114	No Revisions:
Horiz. Scale: 1:100 Vert. Scale: As Noted		Region 6 RLB	Revised:
Unit Information Unit Leader Initials			Void:
Scanlon Szynskie Scanlon Szynskie Group, Inc. 3045 S. Parker Road, Suite 225 Aurora, Co 80014-2950 303.696.2602 fax 303.696.0812 SSG PROJECT NO.: 07029.00			

I-25/SANTA FE INTERCHANGE I-25 ROADWAY LIGHTING PLAN			Project No./Code
			IM 0254-394
Designer: KAT	Structure Numbers		16311
Detailer: ADC			
Sheet Subset: LIGHTING	Subset Sheets: SFLP-04 of 22		Sheet Number 468

amy 12:56:39 PM N:\FELSBURG\125 Santa Fe\elec drawings\16311\Phase 1.2 - 1.3\Lighting Drawings\16311LTG_PH2_SFLP-4.dgn
9/27/2010 CDOT-DefaultPrinter_XM.pltcfg CDOT-PenTable.tbl

GENERAL LANDSCAPE NOTES:

1. ALL ROADSIDE TREE RINGS SHALL HAVE A 48" DIAMETER TREE RING WITH A 4" LAYER OF CEDAR MULCH. NO LANDSCAPE FABRIC OR EDGING IS REQUIRED.
2. STAKE ALL PLANT LOCATIONS FOR APPROVAL BY THE PROJECT LANDSCAPE ARCHITECT PRIOR TO INSTALLATION.
3. LANDSCAPE ESTABLISHMENT PERIOD IS ONE YEAR FOLLOWING FINAL ACCEPTANCE. ALL NEW TREES SHALL BE MAINTAINED FOR ONE YEAR BY THE CONTRACTOR FOLLOWING FINAL ACCEPTANCE. MAINTENANCE SHALL INCLUDE MANUAL WATERING PLANT MATERIAL PROPERLY IN ACCORDANCE WITH THE SPECIFICATIONS, REMOVING DEAD BRANCHES, WEEDING AND KEEPING THE AREA FREE OF TRASH.
4. ALL TREE PITS AREAS SHALL RECEIVE 4 CUBIC YARDS PER 1000 SQUARE FEET OF AMENDMENTS, OR 20% OF BACKFILL VOLUME.
5. RESTORE ANY DISTURBED AREAS IN EXISITNG SEEDED AREAS THAT HAVE BEEN DAMAGED DURING CONSTRUCTION IN ACCORDANCE WITH SPECIFICATIONS.
6. PLANT LOCATIONS AND SPACING SHALL PERMIT NORMAL PLANT DEVELOPMENT WITHOUT UNDUE CROWDING OR TRIMMING.
7. PROVIDE TREES THAT ARE WELL ESTABLISHED AND ROOTED WITH NOT LESS THAN THE MINIMUM NUMBER AND LENGTH OF BRANCHES REQUIRED BY THE COLORADO NURSERY ACT FOR THE SIZE INDICATED.
8.

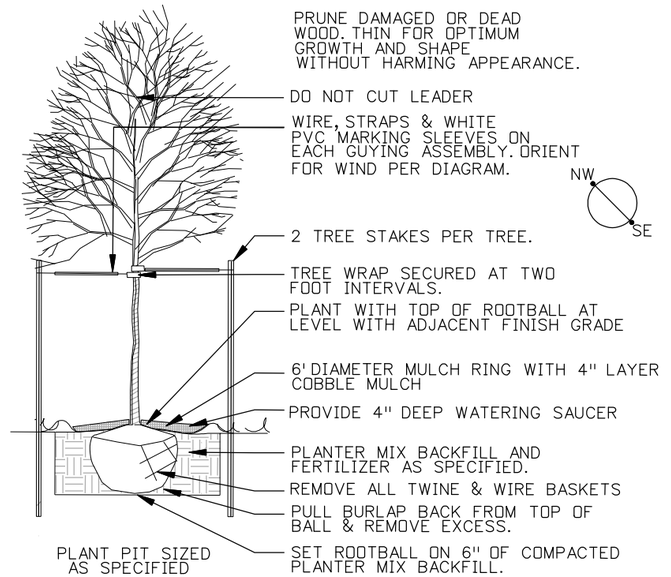

LANDSCAPE SCHEDULE

ITEM NO.	DESCRIPTION	UNIT	TOTAL
212-00048	SOIL PREPARATION (SPECIAL)	CY	7
213-00008	MULCHING (WOOD CHIP)	CF	6
214-00000	LANDSCAPE MAINTENANCE	LS	1
214-00230	DECIDUOUS TREE (3 INCH CALIPER)	EA	16
214-00506	EVERGREEN TREE (6'FT.)(BALL AND BURLAP)	EA	17

LANDSCAPE LEGEND

DECIDUOUS SHADE TREE

SYMBOL	KEY	QTY	COMMON NAME	BOTANICAL NAME	SIZE	SPACING	WATER USE ZONE	HEIGHT
	CO	6	COMMON HACKBERRY	CELTIS OCCIDENTALIS	3" CAL.	SEE PLAN	LOW	60'
	QB	10	SWAMP WHITE OAK	QUERCUS BICOLOR	3" CAL.	SEE PLAN	LOW	50'
	EVERGREEN TREE							
	JM	7	ONE SEED JUNIPER	JUNIPERUS MONOSPERMA	6' HT.	SEE PLAN	VERY LOW	30'
	PE	10	PINON PINE	PINUS EDULIS	6' HT.	SEE PLAN	VERY LOW	30'

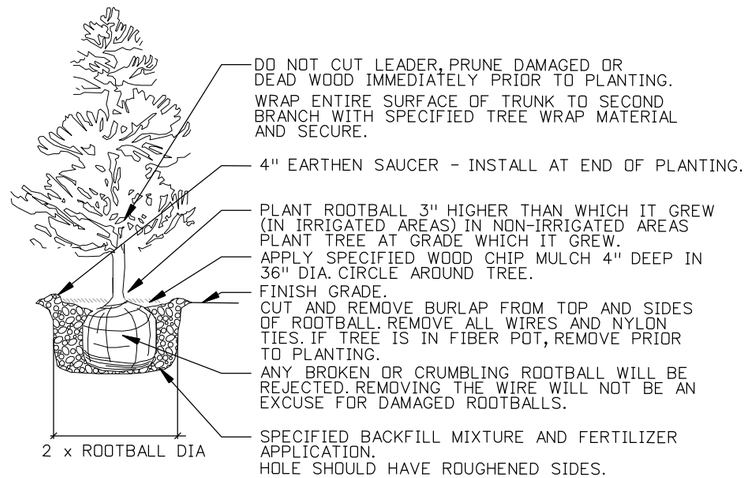

Print Date: 9/21/2010	Sheet Revisions			Colorado Department of Transportation	As Constructed
File Name: 16311_LAND_ENVI LND NT01.dgn	Date:	Comments	Init.	2000 South Holly Street, Denver, CO 80222, Phone: 303-972-9112 FAX: 303-972-9114	No Revisions:
Horiz. Scale: 1:100 Vert. Scale: As Noted				Region 6 RLB	Revised:
Unit Information Unit Leader Initials					Void:
FELSBURG HOLT & ULLEVIG 6300 South Syracuse Way Centennial, CO 80111					

I-25/SANTA FE INTERCHANGE LANDSCAPE GENERAL NOTES			Project No./Code
			IM 0254-394
Designer: PKM	Structure Numbers		16311
Detailer: PAF			
Sheet Subset:	Subset Sheets: of		Sheet Number 469

Pamela Foster 1:45:10 PM Z:\PROJECTS\FHUV\I-25 Santa Fe\Alameda\16311\2010 CADD PH2\LANDSCAPE_ENVIRONMENTAL\DRAWINGS\16311_LAND_ENVI LND NT01.dgn
9/21/2010 CDOT-PDFdriver.plt
CDOT-PenTable.tbl

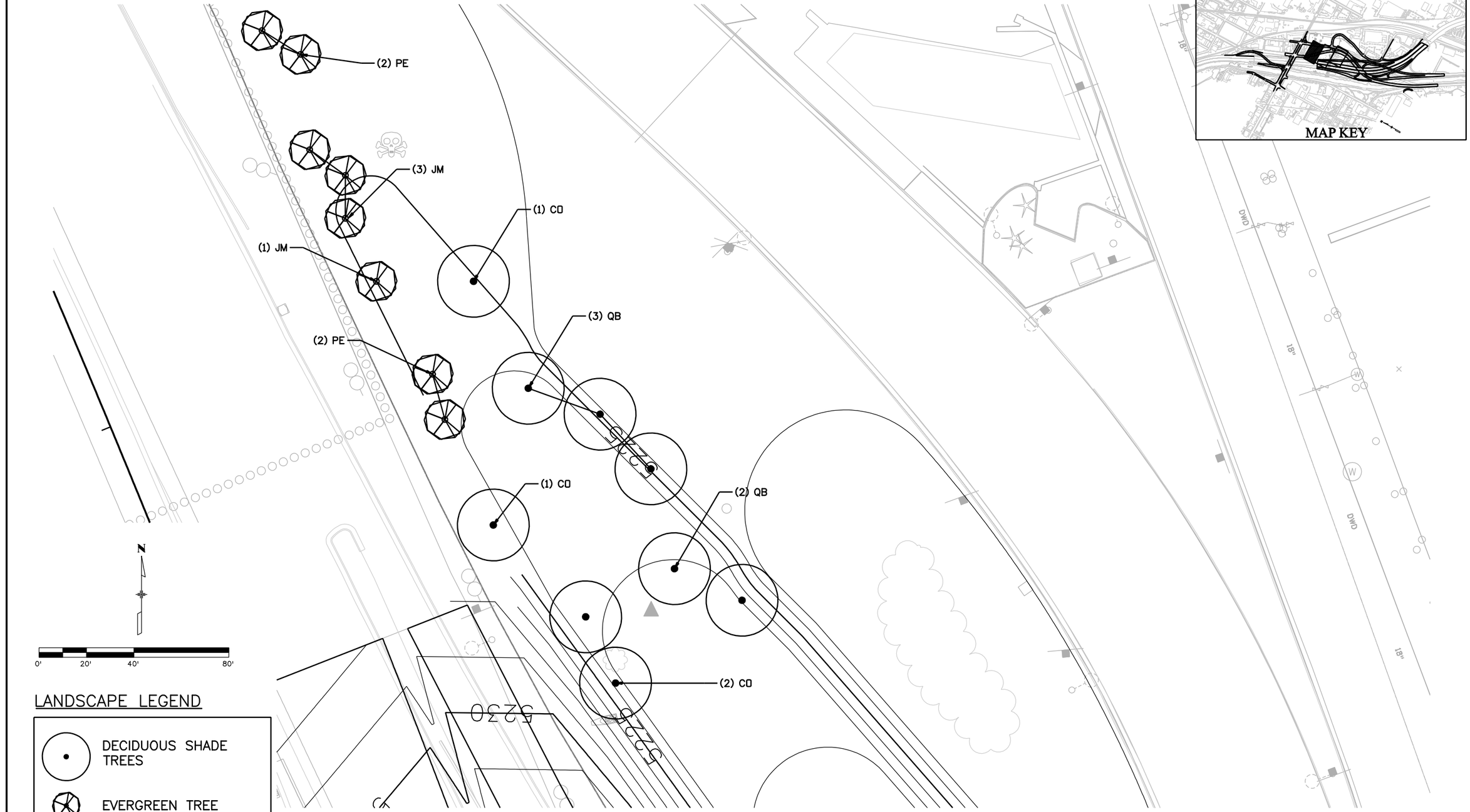

LANDSCAPE LEGEND

- DECIDUOUS SHADE TREES
- EVERGREEN TREE

MATCHLINE SEE SHEET 2 OF 3

Print Date: 9/21/2010
File Name: 16311_LAND_ENVI LND PL01.dgn
Horiz. Scale: 1:40 Vert. Scale: As Noted
Unit Information Unit Leader Initials

FELSBURG HOLT & ULLEVIG
6300 South Syracuse Way
Centennial, CO 80111

Sheet Revisions		
Date:	Comments	Init.

Colorado Department of Transportation
DEPARTMENT OF TRANSPORTATION
2000 South Holly Street
Denver, CO 80222
Phone: 303-972-9112 FAX: 303-972-9114
Region 6 RLB

As Constructed
No Revisions:
Revised:
Void:

I-25/SANTA FE INTERCHANGE
Landscape Plan

Designer: PKM
Detailer: PAF
Sheet Subset: LANDSCAPE
Structure Numbers:
Subset Sheets: 1 of 3

Project No./Code
IM 0254-394
16311
Sheet Number 470

Pamela Foster 6:58:13 AM Z:\PROJECTS\FHUN\I-25 Santa Fe\Alameda\16311\2010 CADD PH2\LANDSCAPE_ENVIRONMENTAL\DRAWINGS\16311_LAND_ENVI LND PL01.dgn
9/21/2010 CDOT-PDFdriver.plt
CDOT-PenTable.tbl

MATCHLINE SEE SHEET 1 OF 3

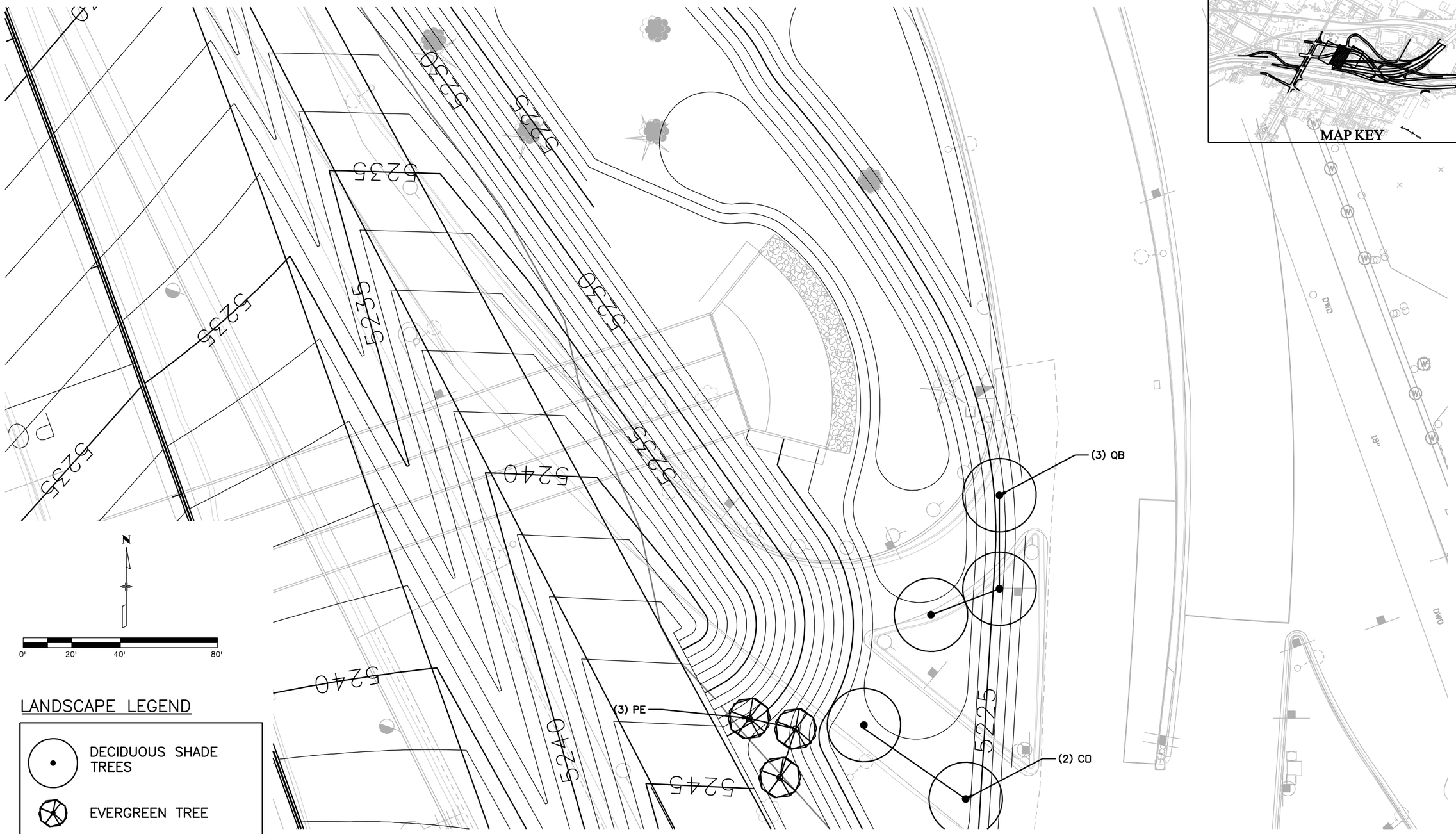

LANDSCAPE LEGEND

DECIDUOUS SHADE TREES

EVERGREEN TREE

MATCHLINE SEE SHEET 3 OF 3

Print Date: 9/21/2010	Sheet Revisions			Colorado Department of Transportation	As Constructed	I-25/SANTA FE INTERCHANGE Landscape Plan	Project No./Code
File Name: 16311_LAND_ENVI LND PL01.dgn	Date:	Comments	Init.	DOT DEPARTMENT OF TRANSPORTATION 2000 South Holly Street Denver, CO 80222 Phone: 303-972-9112 FAX: 303-972-9114	No Revisions:		IM 0254-394
Horiz. Scale: 1:40 Vert. Scale: As Noted					Revised:	Designer: PKM Structure Numbers	16311
Unit Information Unit Leader Initials				Region 6 RLB	Void:	Detailer: PAF	
FELSBURG HOLT & ULLEVIG 6300 South Syracuse Way Centennial, CO 80111						Sheet Subset:LANDSCAPE Subset Sheets: 2 of 3	Sheet Number 471

Pamela Foster 7:01:23 AM Z:\PROJECTS\FHU\I-25 Santa FeAlameda\16311\2010 CADD PH2\LANDSCAPE_ENVIRONMENTAL\DRAWINGS\16311_LAND_ENVI LND PL01.dgn
9/21/2010 CDOT-PDFdriver.plt CDOT-PenTable.tbl

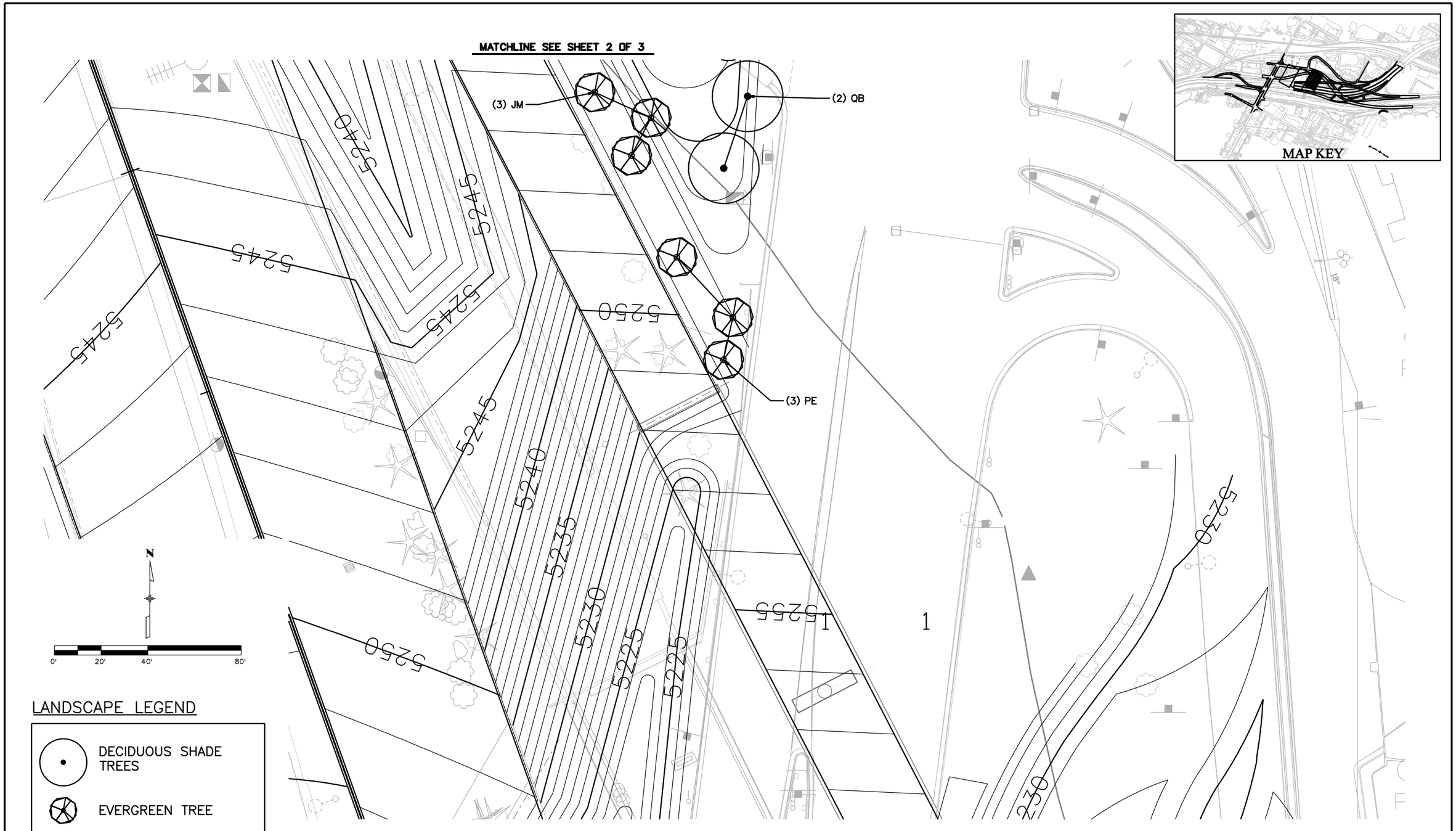

Pamela Foster 7:03:52 AM Z:\PROJECTS\FHU\I-25 Santa FeAlameda\16311\2010 CADD PH2\LANDSCAPE_ENVIRONMENTAL\DRAWINGS\16311_LAND_ENVI LND PL01.dgn
9/21/2010 CDOT-PDFdriver.plt CDOT-PenTable.tbl

Print Date: 9/21/2010		Sheet Revisions		Colorado Department of Transportation	As Constructed	I-25/SANTA FE INTERCHANGE Landscape Plan	Project No./Code
File Name: 16311_LAND_ENVI LND PL01.dgn		Date:	Comments	Init.	No Revisions:		IM 0254-394
Horiz. Scale: 1:40	Vert. Scale: As Noted				Revised:	Designer: PKM / Structure Numbers	16311
Unit Information	Unit Leader Initials				Void:	Detailer: PAF	
FELSBURG HOLT & ULLEVIG 6300 South Syracuse Way Centennial, CO 80111						Sheet Subset: LANDSCAPE / Subset Sheets: 3 of 3	Sheet Number 472

Colorado Department of Transportation
DOT DEPARTMENT OF TRANSPORTATION
2000 South Holly Street
Denver, CO 80222
Phone: 303-972-9112 FAX: 303-972-9114
Region 6 RLB

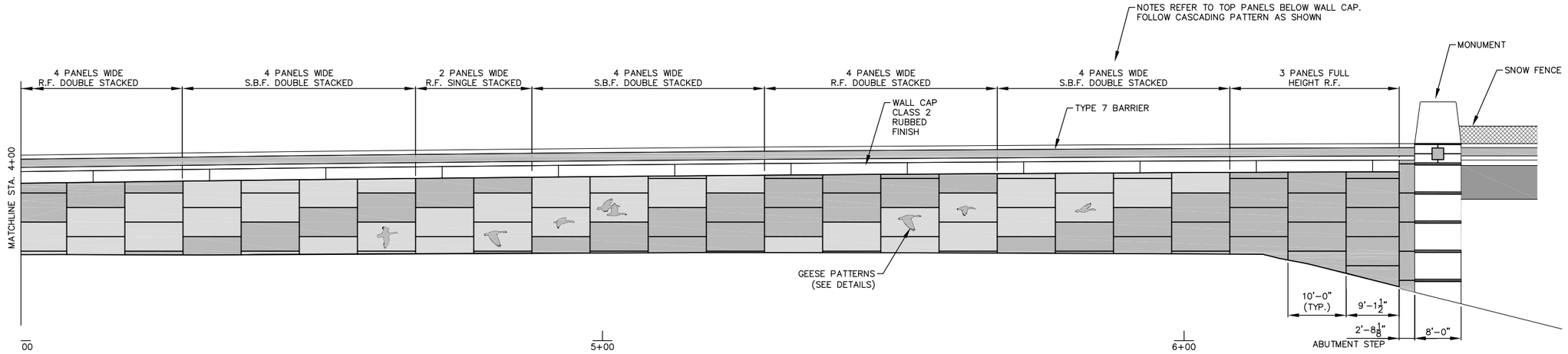

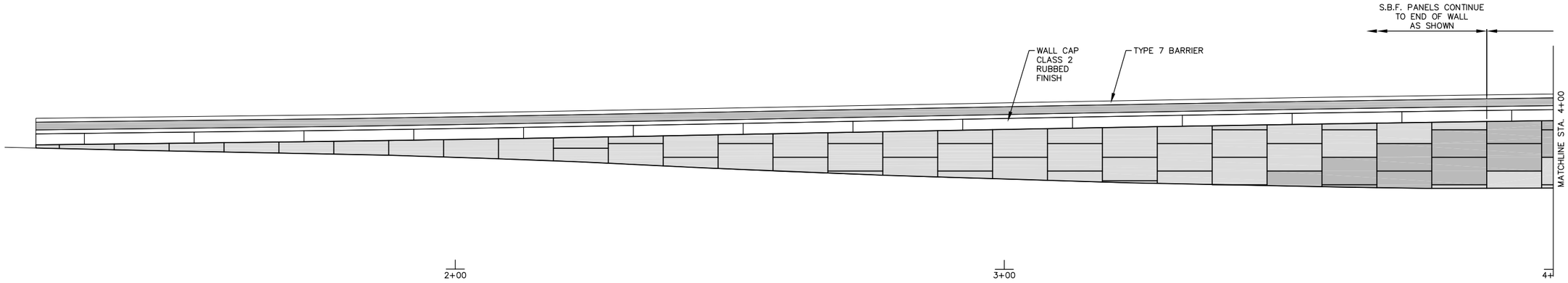

I-25 NB WALL 1
(STR. NO. WALL F-16-DW)

ARCHITECTURAL FINISH LEGEND

- (CRF) CLASS 2 RUBBED FINISH
- (SBF) SANDBLAST #2 FORMLINER
- (RF) RUGGED FLAGSTONE 160B

pkm design group, inc.
7353 S. Alton Way, Suite 125
Centennial, Colorado 80112
phone 303.804.0080
fax 303.804.0070
www.pkmdg.com

Print Date: $DATE$
File Name: $FILES$
Horiz. Scale: $SCALESHORT$ Vert. Scale: As Noted
Unit Information Unit Leader Initials

FELSBURG HOLT & ULLEVIG
6300 South Syracuse Way
Centennial, CO 80111

Sheet Revisions

Date:	Comments	Init.

Colorado Department of Transportation
DEPARTMENT OF TRANSPORTATION
2000 South Holly Street
Denver, CO 80222
Phone: 303-972-9112 FAX: 303-972-9114
Region 6 RLB

As Constructed
No Revisions:
Revised:
Void:

I-25/SANTA FE INTERCHANGE
WALL ELEVATIONS

Designer: PKM
Detailer: PAF
Sheet Subset:
Structure Numbers:
Subset Sheets: 1 of 5

Project No./Code
IM 0254-394
16311
Sheet Number 473

Z:\PROJECTS\FHU I-25 SANTA FE\ALAMEDA\16311\LANDSCAPE_ENVIRONMENTAL\DRAWINGS\16311 WALL SHEET.DWG
$PENTBLS$
$PLTDRVS$
$PLOT_INFO$
$DATE$

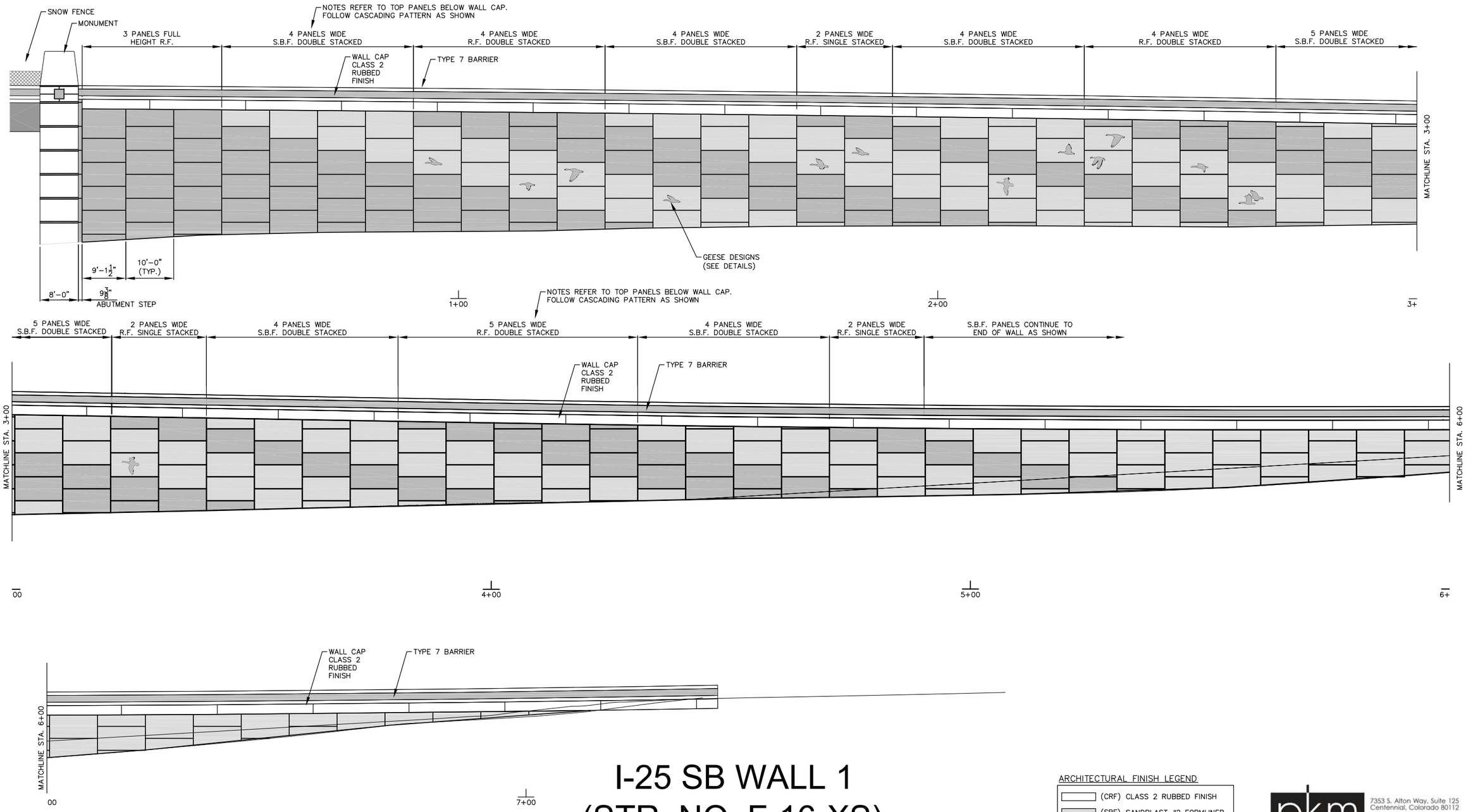

I-25 SB WALL 1
(STR. NO. F-16-XS)

ARCHITECTURAL FINISH LEGEND

- (CRF) CLASS 2 RUBBED FINISH
- (SBF) SANDBLAST #2 FORMLINER
- (RF) RUGGED FLAGSTONE 160B

pkm design group, inc.
7353 S. Alton Way, Suite 125
Centennial, Colorado 80112
phone 303.804.0080
fax 303.804.0070
www.pkmdg.com

Print Date: $DATE$
File Name: $FILES$
Horiz. Scale: $SCALESHORT$ Vert. Scale: As Noted
Unit Information Unit Leader Initials

FELSBURG HOLT & ULLEVIG
6300 South Syracuse Way
Centennial, CO 80111

Sheet Revisions

Date:	Comments	Init.

Colorado Department of Transportation
DOT DEPARTMENT OF TRANSPORTATION
2000 South Holly Street
Denver, CO 80222
Phone: 303-972-9112 FAX: 303-972-9114
Region 6

SEPTEMBER, 2010 RLB

As Constructed
No Revisions:
Revised:
Void:

I-25/SANTA FE INTERCHANGE
WALL ELEVATIONS

Designer: PKM
Detailer: PAF
Sheet Subset:
Structure Numbers
Subset Sheets: 2 of 5

Project No./Code
IM 0254-394
16311
Sheet Number 474

Z:\PROJECTS\FHU I-25 SANTA FE\ALAMEDA\16311\LANDSCAPE_ENVIRONMENTAL\DRAWINGS\16311 WALL SHEET.DWG
$PENTBL$
$PLTDRVS$
$PLOT_INFO$
$DATE$

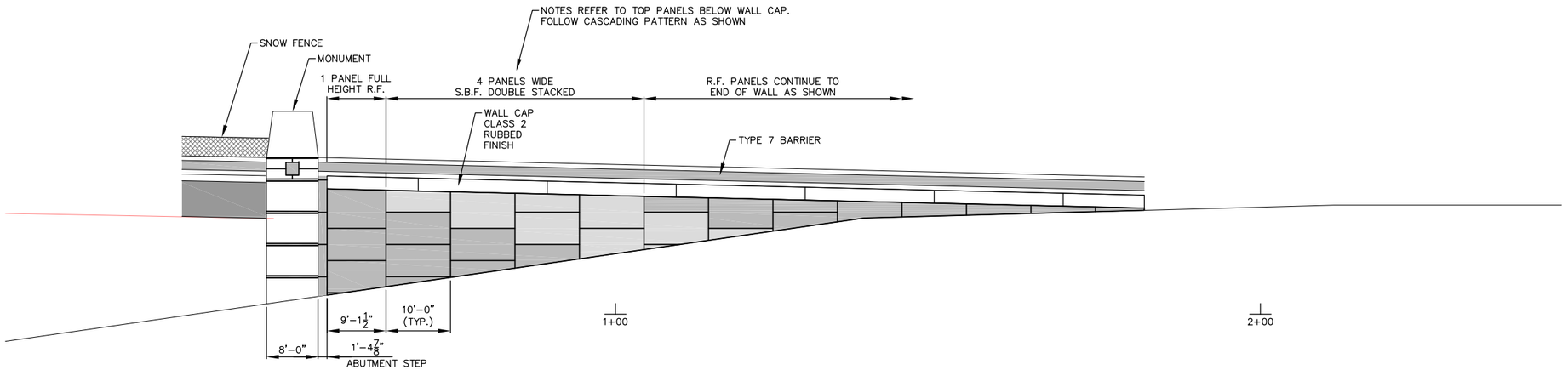

I-25 NB WALL 2
(STR. NO. F-16-XS)

ARCHITECTURAL FINISH LEGEND

- (CRF) CLASS 2 RUBBED FINISH
- (SBF) SANDBLAST #2 FORMLINER
- (RF) RUGGED FLAGSTONE 160B

pkm design group, inc.
7353 S. Alton Way, Suite 125
Centennial, Colorado 80112
phone 303.804.0080
fax 303.804.0070
www.pkmdg.com

Print Date: $DATE$
File Name: $FILES$
Horiz. Scale: $SCALESHORT$ Vert. Scale: As Noted
Unit Information Unit Leader Initials

FELSBURG HOLT & ULLEVIG
6300 South Syracuse Way
Centennial, CO 80111

Sheet Revisions

Date:	Comments	Init.

Colorado Department of Transportation
2000 South Holly Street
Denver, CO 80222
Phone: 303-972-9112 FAX: 303-972-9114
Region 6 RLB

As Constructed
No Revisions:
Revised:
Void:

I-25/SANTA FE INTERCHANGE
WALL ELEVATIONS

Designer: PKM
Detailer: PAF
Sheet Subset:
Structure Numbers
Subset Sheets: 4 of 5

Project No./Code
IM 0254-394
16311
Sheet Number 475

Z:\PROJECTS\FHU I-25 SANTA FE\ALAMEDA\16311\LANDSCAPE_ENVIRONMENTAL\DRAWINGS\16311 WALL SHEET.DWG
$PENTBLS$
$PLTDRVS$
$PLOT_INFO$
$DATE$

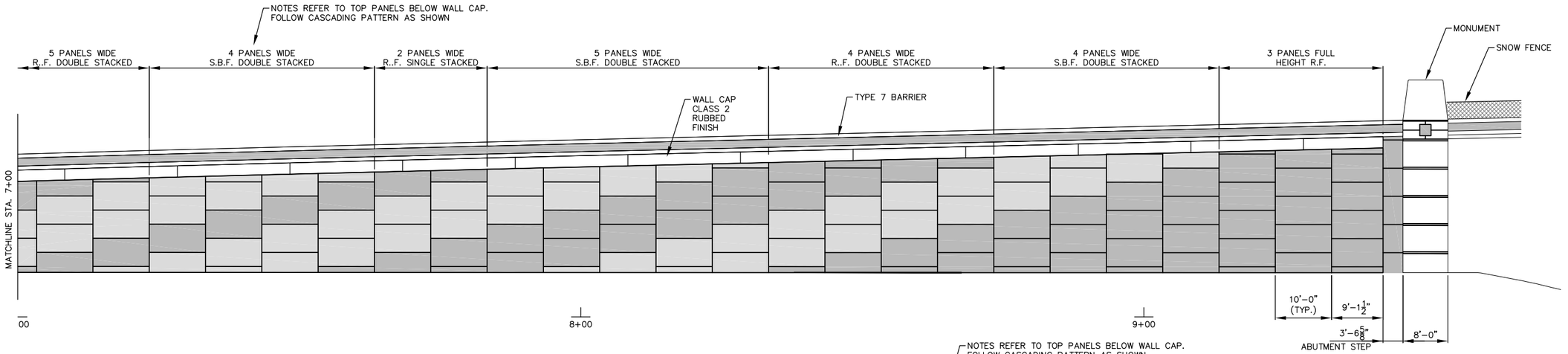

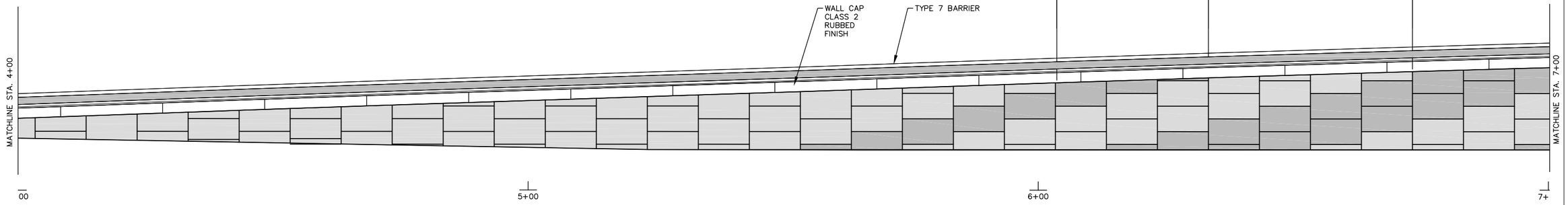

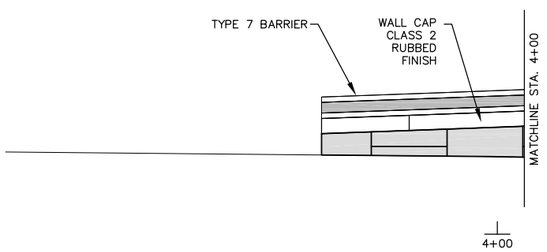

I-25 SB WALL 2
(STR. NO. F-16-XS)

ARCHITECTURAL FINISH LEGEND

- (CRF) CLASS 2 RUBBED FINISH
- (SBF) SANDBLAST #2 FORMLINER
- (RF) RUGGED FLAGSTONE 160B

pkm design group, inc.
7353 S. Alton Way, Suite 125
Centennial, Colorado 80112
phone 303.804.0080
fax 303.804.0070
www.pkmdg.com

Print Date: $DATE$
File Name: $FILES$
Horiz. Scale: $SCALESHORT$ Vert. Scale: As Noted
Unit Information Unit Leader Initials

FELSBURG HOLT & ULLEVIG 6300 South Syracuse Way Centennial, CO 80111

Sheet Revisions

Date:	Comments	Init.

Colorado Department of Transportation
DEPARTMENT OF TRANSPORTATION
2000 South Holly Street
Denver, CO 80222
Phone: 303-972-9112 FAX: 303-972-9114
Region 6 RLB

As Constructed
No Revisions:
Revised:
Void:

I-25/SANTA FE INTERCHANGE
WALL ELEVATIONS

Designer: PKM
Detailer: PAF
Sheet Subset:
Structure Numbers
Subset Sheets: 3 of 5

Project No./Code
IM 0254-394
16311
Sheet Number 476

$PLOT_INFO$ $PLTDRVS$ $PENTBLS$
$DATE$
Z:\PROJECTS\FHU I-25 SANTA FE\ALAMEDA\16311\LANDSCAPE_ENVIRONMENTAL\DRAWINGS\16311 WALL SHEET.DWG

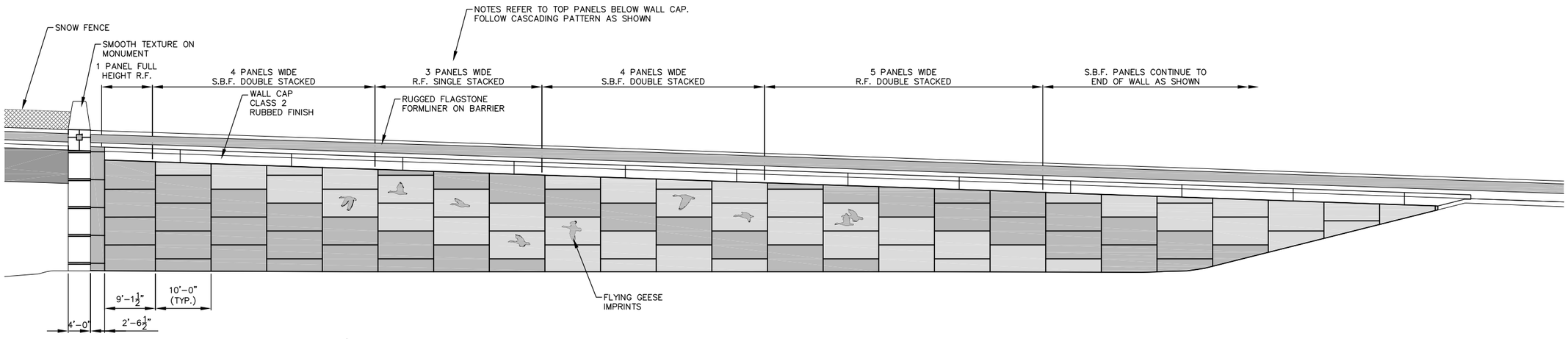

RAMP 1 WALL 3
(STR. NO. F-16-DV)

ARCHITECTURAL FINISH LEGEND

- (CRF) CLASS 2 RUBBED FINISH
- (SBF) SANDBLAST #2 FORMLINER
- (RF) RUGGED FLAGSTONE 160B

pkm design group, inc.
7353 S. Alton Way, Suite 125
Centennial, Colorado 80112
phone 303.804.0080
fax 303.804.0070
www.pkmdg.com

$PENTBLS$

$PLOT_INFO$ $PLTDRVS$ $DATE$

Print Date: $DATE$	Sheet Revisions			Colorado Department of Transportation
File Name: $FILES$	Date:	Comments	Init.	2000 South Holly Street
Horiz. Scale: $SCALESHORT$ Vert. Scale: As Noted				Denver, CO 80222
Unit Information Unit Leader Initials				Phone: 303-972-9112 FAX: 303-972-9114
FELSBURG HOLT & ULLEVIG 6300 South Syracuse Way Centennial, CO 80111				Region 6 RLB

As Constructed	I-25/SANTA FE INTERCHANGE WALL ELEVATIONS		Project No./Code
No Revisions:			IM 0254-394
Revised:	Designer: PKM	Structure Numbers	16311
Void:	Detailer: PAF		Sheet Number 477
	Sheet Subset:	Subset Sheets: 5 of 5	

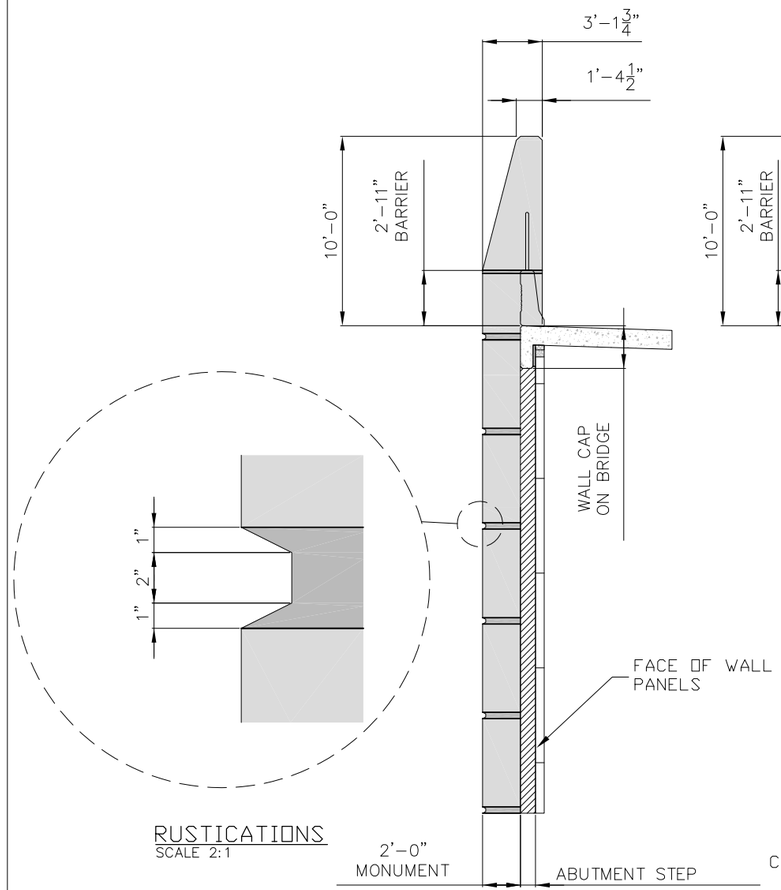

RUSTICATIONS
SCALE 2:1

SECTION
SCALE 1:8

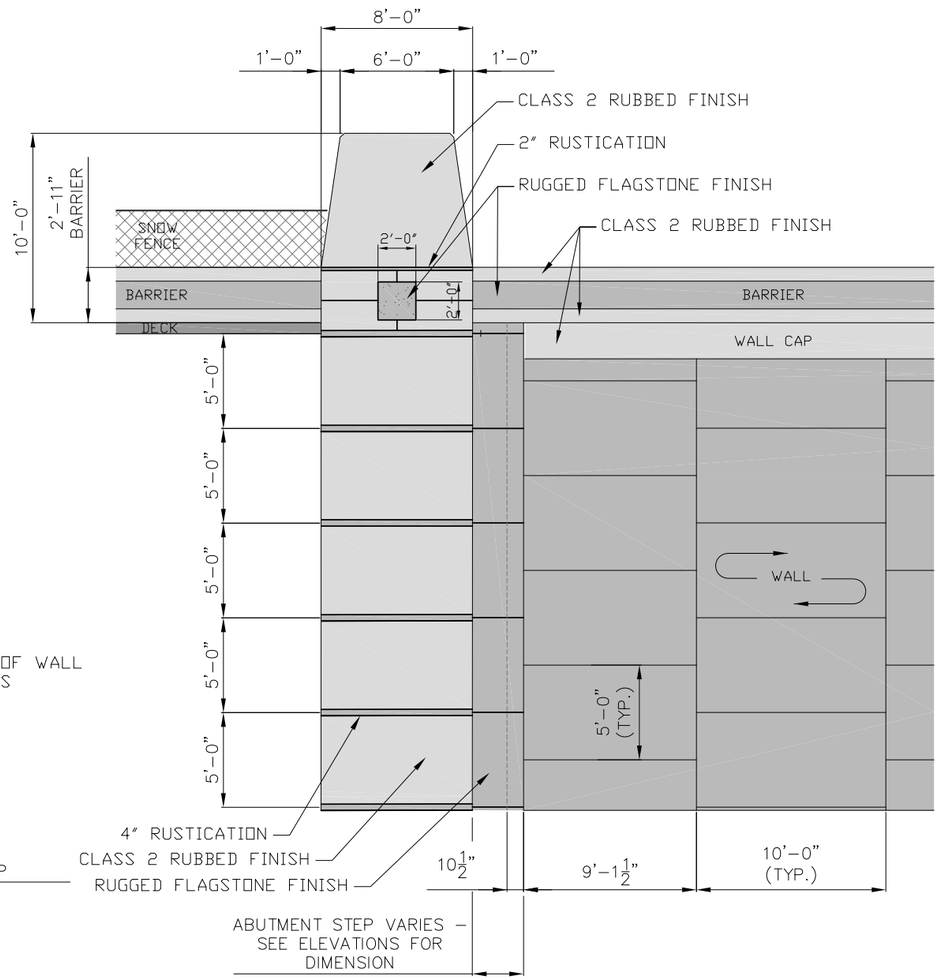

ELEVATION (TYP.)
SCALE 1:8

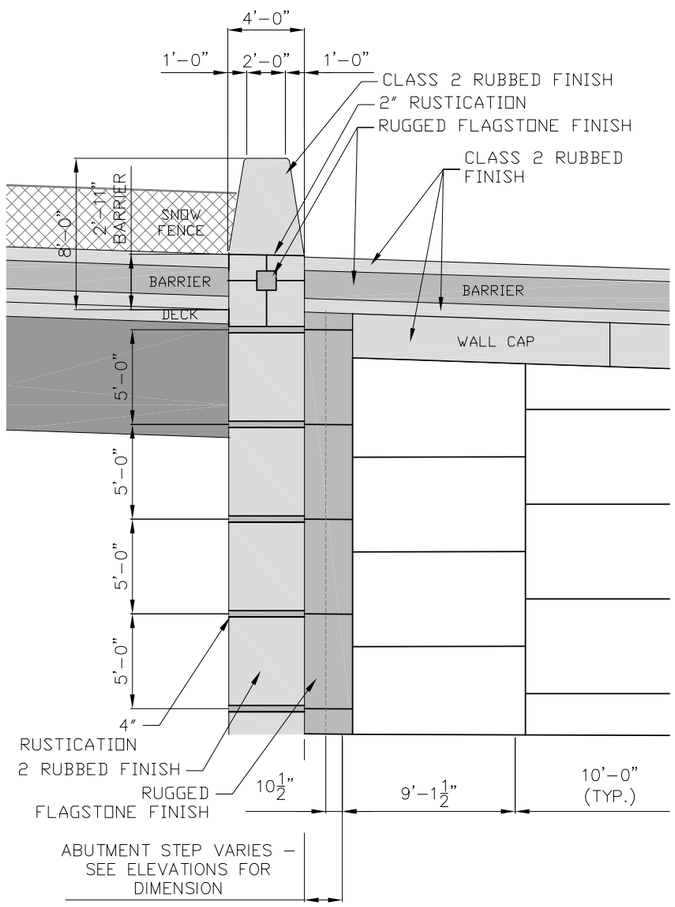

ELEVATION RAMP 1 WALL 3
F-16-DV
SCALE 1:8

pkm design group, inc.
7353 S. Alton Way, Suite 125
Centennial, Colorado 80112
phone 303.804.0080
fax 303.804.0070
www.pkmdg.com

Z:\ PROJECTS\FHU I-25 SANTA FEALAMEDA\16311 \ LANDSCAPE_ENVIRONMENTAL\DRAWINGS \ 16311 ABUTMENT DETAILS.DWG

Print Date: 9-24-10	Sheet Revisions	Colorado Department of Transportation	As Constructed
File Name: 16311 ABUTMENT DETAILS.DWG	Date: Comments: Init.	2000 South Holly Street, Denver, CO 80222	No Revisions:
Horiz. Scale: Vert. Scale: As Noted		Phone: 303-972-9112 FAX: 303-972-9114	Revised:
Unit Information Unit Leader Initials		Region 6 RLB	Void:
FELSBURG HOLT & ULLEVIG 6300 South Syracuse Way Centennial, CO 80111			

I-25/SANTA FE INTERCHANGE AESTHETIC DETAILS			Project No./Code
Designer: PKM	Structure Numbers		IM 0254-394
Detailer: PAF			16311
Sheet Subset:	Subset Sheets: 1 of 3		Sheet Number 478

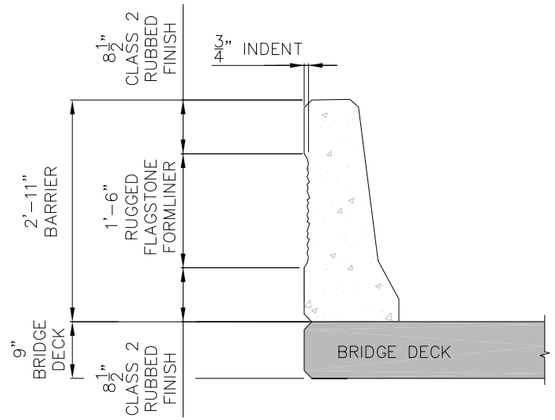

BARRIER ON BRIDGE
N.T.S.

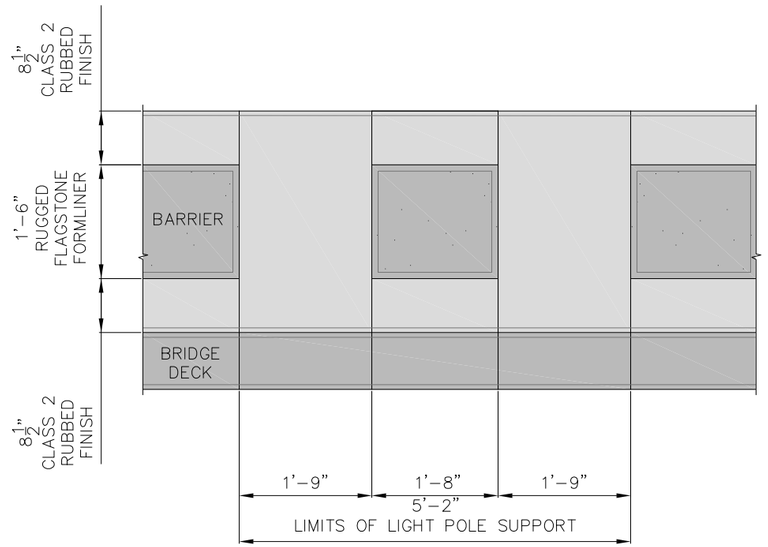

LIGHT POLE SUPPORT ELEVATION
N.T.S.

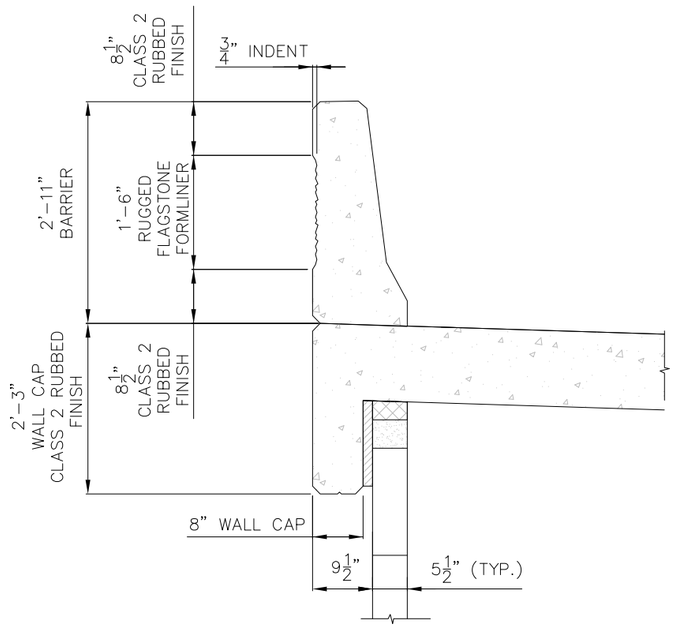

BARRIER ON WALL
N.T.S.

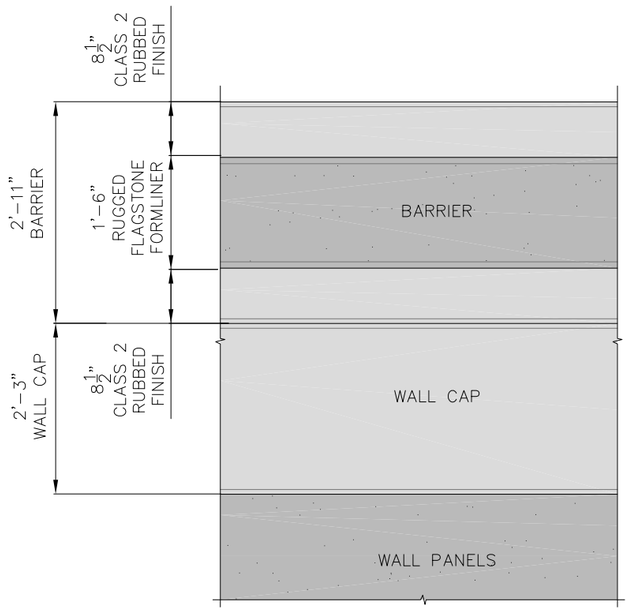

BARRIER ON WALL
N.T.S.

pkm design group, inc.
7353 S. Alton Way, Suite 125
Centennial, Colorado 80112
phone 303.804.0080
fax 303.804.0070
www.pkmdg.com

Z:\ PROJECTS\FHU I-25 SANTA FE\ALAMEDA\16311 \ LANDSCAPE_ENVIRONMENTAL\DRAWINGS \ 16311 ABUTMENT DETAILS.DWG

Print Date: 9-24-10	Sheet Revisions	Colorado Department of Transportation	As Constructed
File Name: 16311 ABUTMENT DETAILS.DWG	Date: / Comments / Init.	2000 South Holly Street, Denver, CO 80222	No Revisions:
Horiz. Scale: Vert. Scale: As Noted		Phone: 303-972-9112 FAX: 303-972-9114	Revised:
Unit Information Unit Leader Initials		Region 6 RLB	Void:
FELSBURG HOLT & ULLEVIG 6300 South Syracuse Way Centennial, CO 80111			

I-25/SANTA FE INTERCHANGE AESTHETIC DETAILS			Project No./Code
			IM 0254-394
Designer: PKM	Structure Numbers		16311
Detailer: PAF			
Sheet Subset:	Subset Sheets: 2 of 3		Sheet Number 479

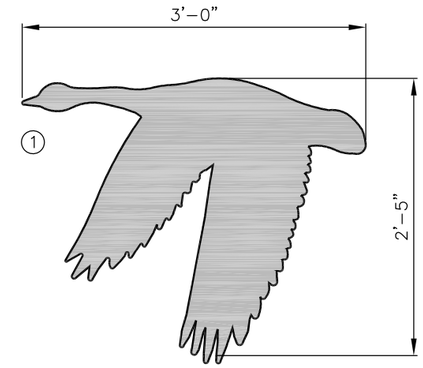

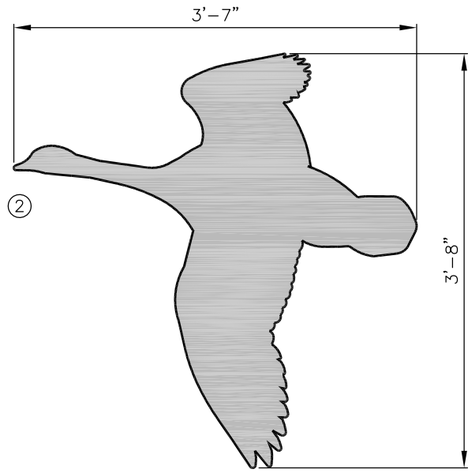

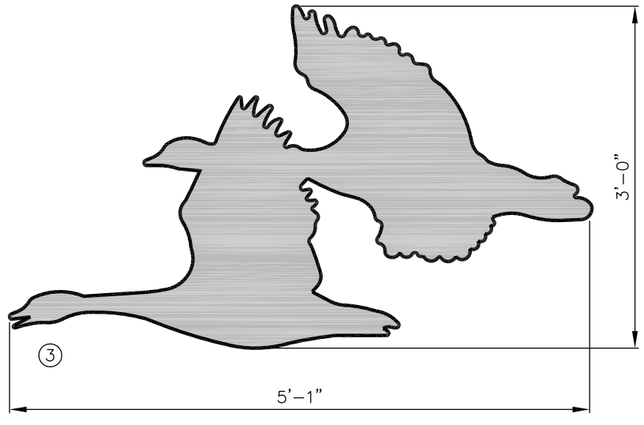

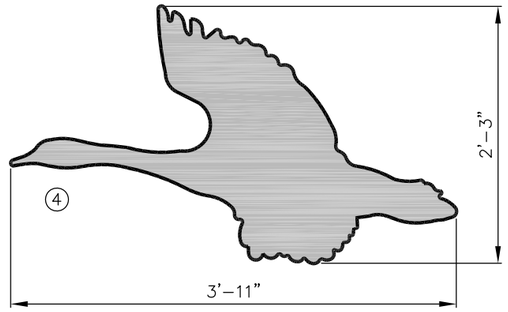

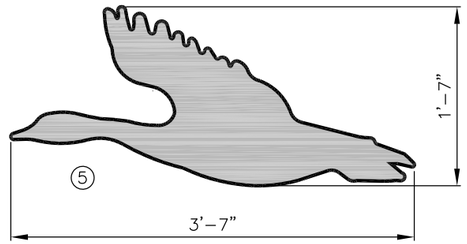

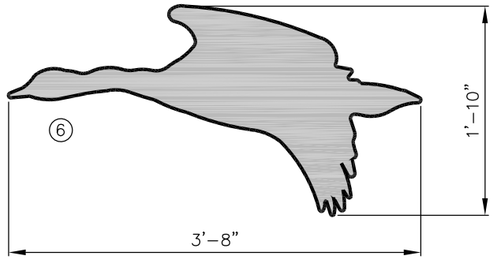

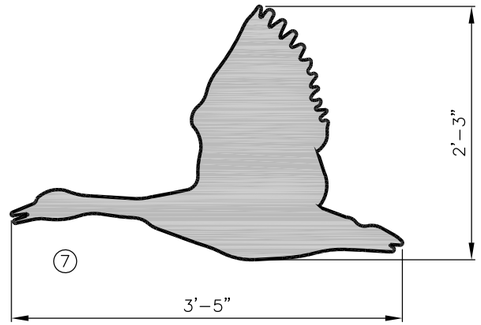

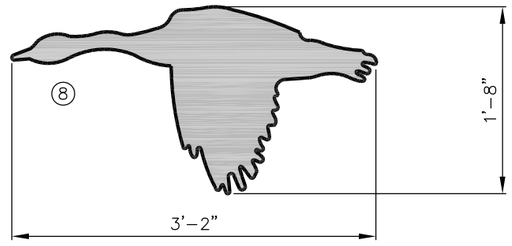

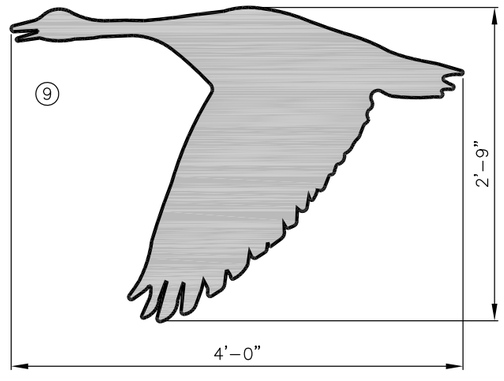

NOTES:
1. SEE WALL ELEVATIONS FOR FULL FORMLINER LAYOUT SOME PANELS ALSO HAVE MIRROR IMAGE OF BIRDS AS SHOWN ON THIS SHEET

2. INSIDE FACE OF GEESE SHALL BE STAINED FED. COLOR NO. 26251

GEESE DETAILS
NOT TO SCALE

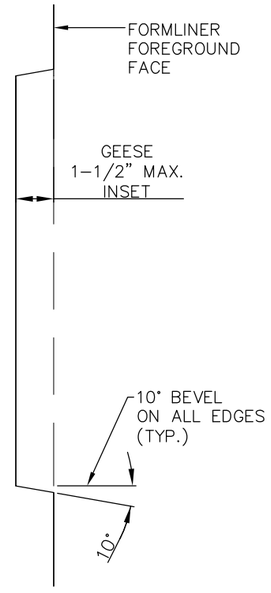

TYPICAL CROSS SECTION OF GEESE
NOT TO SCALE

PKM
DESIGN GROUP, INC.
7353 S. ALTON WAY, SUITE A125
CENTENNIAL, CO. 80112
PH. (303) 804-0080
FAX(303) 804-0070

Print Date: 9-24-10	Sheet Revisions	Colorado Department of Transportation	As Constructed
File Name: 16311 WALL DETAILS-2.DWG	Date: / Comments / Init.	2000 South Holly Street, Denver, CO 80222	No Revisions:
Horiz. Scale: Vert. Scale: As Noted		Phone: 303-972-9112 FAX: 303-972-9114	Revised:
Unit Information Unit Leader Initials		Region 6 RLB	Void:
FELSBURG HOLT & ULLEVIG 6300 South Syracuse Way Centennial, CO 80111			

I-25/SANTA FE INTERCHANGE AESTHETIC DETAILS			Project No./Code
Designer: PKM	Structure Numbers		IM 0254-394
Detailer: PAF			16311
Sheet Subset:	Subset Sheets: 3 of 3		Sheet Number 480